STATE OF OHIO
DEPARTMENT OF TRANSPORTATION

MIA-41-10.32

CITY OF TROY
MIAMI COUNTY, OHIO

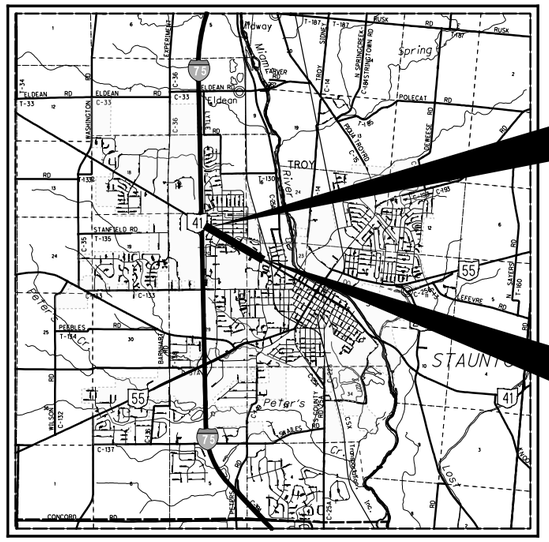

LOCATION MAP

LATITUDE: 40°02'55" LONGITUDE: 84°13'28"

SCALE IN MILES
0 1 2 3 4

N

PORTION TO BE IMPROVED
INTERSTATE HIGHWAY
FEDERAL ROUTES
STATE ROUTES
COUNTY & TOWNSHIP ROADS
OTHER ROADS

DESIGN DESIGNATION

CURRENT ADT (2023)	21350
DESIGN YEAR ADT (2043)	24430
DESIGN HOURLY VOLUME (2043)	2317
DIRECTIONAL DISTRIBUTION	51/49
TRUCKS (24 HOUR B&C)	2%
DESIGN SPEED	40 MPH
LEGAL SPEED	35 MPH

DESIGN FUNCTIONAL CLASSIFICATION:
URBAN MINOR ARTERIAL

NHS PROJECT ..... NO

DESIGN EXCEPTIONS

NONE REQUIRED

ADA DESIGN WAIVERS

NONE REQUIRED

UNDERGROUND UTILITIES
Contact Two Working Days Before You Dig
OHIO811.org Before You Dig
OHIO811, 8-1-1, or 1-800-362-2764
(Non-members must be called directly)

ENGINEERS SEAL:

SIGNED:
DATE:

PLAN PREPARED BY:
STRAND ASSOCIATES, INC.
615 ELSINORE PLACE, SUITE 320
CINCINNATI, OHIO 45202

INDEX OF SHEETS:

TITLE SHEET	1
SCHEMATIC PLAN	2
TYPICAL SECTIONS	3-6
GENERAL NOTES	7-10
MAINTENANCE OF TRAFFIC	11-26
GENERAL SUMMARY	27-30
ROADWAY SUBSUMMARY	31-33
UTILITY SUBSUMMARY	34-36
PAVEMENT SUBSUMMARY	37
PROJECT SITE PLAN	38
PLAN AND PROFILES	39-47
CROSS SECTIONS	48-85
INTERSECTION DETAILS	86-94
PARKING LOT DETAILS	95-96
DRIVEWAY DETAILS	97-98
CONCRETE ISLAND DETAILS	99
WALK DETAILS	100
DRAINAGE SUBSUMMARY	101-103
STORM SEWER PROFILES	104-110
CULVERT DETAILS	111-115
WATER WORK PLAN	116-120
PAVEMENT MARKING PLAN	121-127
SIGNING PLAN	128-133
TRAFFIC SIGNAL PLAN	134-141
LIGHTING PLAN	142-152
RIGHT OF WAY	153-185
SOIL PROFILES	186-194

PROJECT DESCRIPTION

WIDENING SR 41 (W. MAIN ST.) FROM I-75 TO RIDGE AVE. TO INCLUDE AT LEAST ONE 11' THROUGH LANE IN EACH DIRECTION, RECONSTRUCTING THE SIDEWALK AND CURB LAWN, REPLACING WATERMAIN AND STORM SEWER, AND IMPROVING SIGNALS AND LIGHTING THROUGHOUT THE CORRIDOR.

PROJECT EARTH DISTURBED AREA:	4.5 ACRES
ESTIMATED CONTRACTOR EARTH DISTURBED AREA:	1.0 ACRES
NOTICE OF INTENT EARTH DISTURBED AREA:	5.5 ACRES

2019 SPECIFICATIONS

THE STANDARD SPECIFICATIONS OF THE STATE OF OHIO, DEPARTMENT OF TRANSPORTATION, INCLUDING SUPPLEMENTAL SPECIFICATIONS LISTED IN THE PLANS AND CHANGES LISTED IN THE PROPOSAL SHALL GOVERN THIS IMPROVEMENT.

I HEREBY APPROVE THESE PLANS AND DECLARE THAT THE MAKING OF THE IMPROVEMENT WILL NOT REQUIRE THE CLOSING TO TRAFFIC OF THE HIGHWAY AND THAT PROVISIONS FOR THE MAINTENANCE AND SAFETY OF TRAFFIC WILL BE AS SET FORTH ON THE PLANS AND ESTIMATES.

APPROVED _____
DATE _____ CITY ENGINEER

APPROVED _____
DATE _____ MAYOR, CITY OF TROY

ODOT STANDARD CONSTRUCTION DRAWINGS								CITY OF TROY STANDARD CONST. DRAWINGS		SUPPLEMENTAL SPECIFICATIONS		SPECIAL PROVISIONS
BP-2.1	7/17/15	RM-1.1	1/15/21	MT-95.31	7/19/19	TC-52.10	10/18/13	300-2	10/18	800	7/16/21	NWP 3 07/23/21
BP-2.2	1/15/21	RM-3.1	7/20/18	MT-95.32	4/19/19	TC-52.20	1/15/21	300-5	11/17	813	10/19/18	
BP-3.1	1/17/20	RM-6.1	7/18/14	MT-95.50	7/21/17	TC-65.10	1/17/14	300-8	11/17	815	4/16/21	
CB-2-2A, 2-2B, 2-2C	7/16/21			MT-95.60	4/19/19	TC-65.11	7/21/17	300-10	11/17	816	10/18/19	
		BR-2-15	7/17/15	MT-95.61	4/19/19	TC-71.10	7/16/21	300-11	11/17	832	10/19/18	
CB-3	7/16/21			MT-96.26	1/18/19	TC-81.22	7/17/20	300-12	11/17	839	7/16/21	
DM-1.2	7/16/21	HL-10.11	1/15/21	MT-99.20	4/19/19	TC-82.10	7/19/19	300-13	10/18	906	10/15/10	
DM-2.1	1/18/13	HL-10.12	1/20/17	MT-101.60	1/17/20	TC-83.20	7/21/17	300-14	11/18	907	10/18/19	
		HL-10.13	4/17/20	MT-101.90	7/17/20	TC-84.20	10/18/13	300-15	11/18	909	7/16/21	
MH-1	7/16/21	HL-30.11	1/15/21	MT-105.10	1/17/20	TC-84.21	10/18/13			913	4/16/21	
		HL-30.21	4/17/20	MT-110.10	7/19/13	TC-85.10	4/17/20			916	10/16/21	
BP-4.1	7/19/13	HL-30.22	1/15/21	MT-120.00	1/19/18	TC-85.20	7/20/18			939	1/17/20	
BP-5.1	7/16/21	HL-40.10	7/17/20			TC-85.21	7/16/21			940	4/17/15	
BP-7.1	7/17/20	HL-40.20	7/17/20	TC-41.20	10/18/13	TC-85.22	1/19/18					
		HL-60.11	7/21/17	TC-41.30	10/18/13							
LA-1.2	1/16/09	HL-60.12	7/16/21	TC-42.20	10/18/13	HW-1.1	7/20/18					

FEDERAL PROJECT NO. E200 (284)
PID NO. 110253
CONSTRUCTION PROJECT NO.
RAILROAD INVOLVEMENT NONE
MIA-41-10.32
1 194

S:\CIN\4300--4399\4354\004\Drawings\CAD\110253\roadway\sheets\110253GT001.dgn 10/1/2021 4:37:48 PM Allisonw

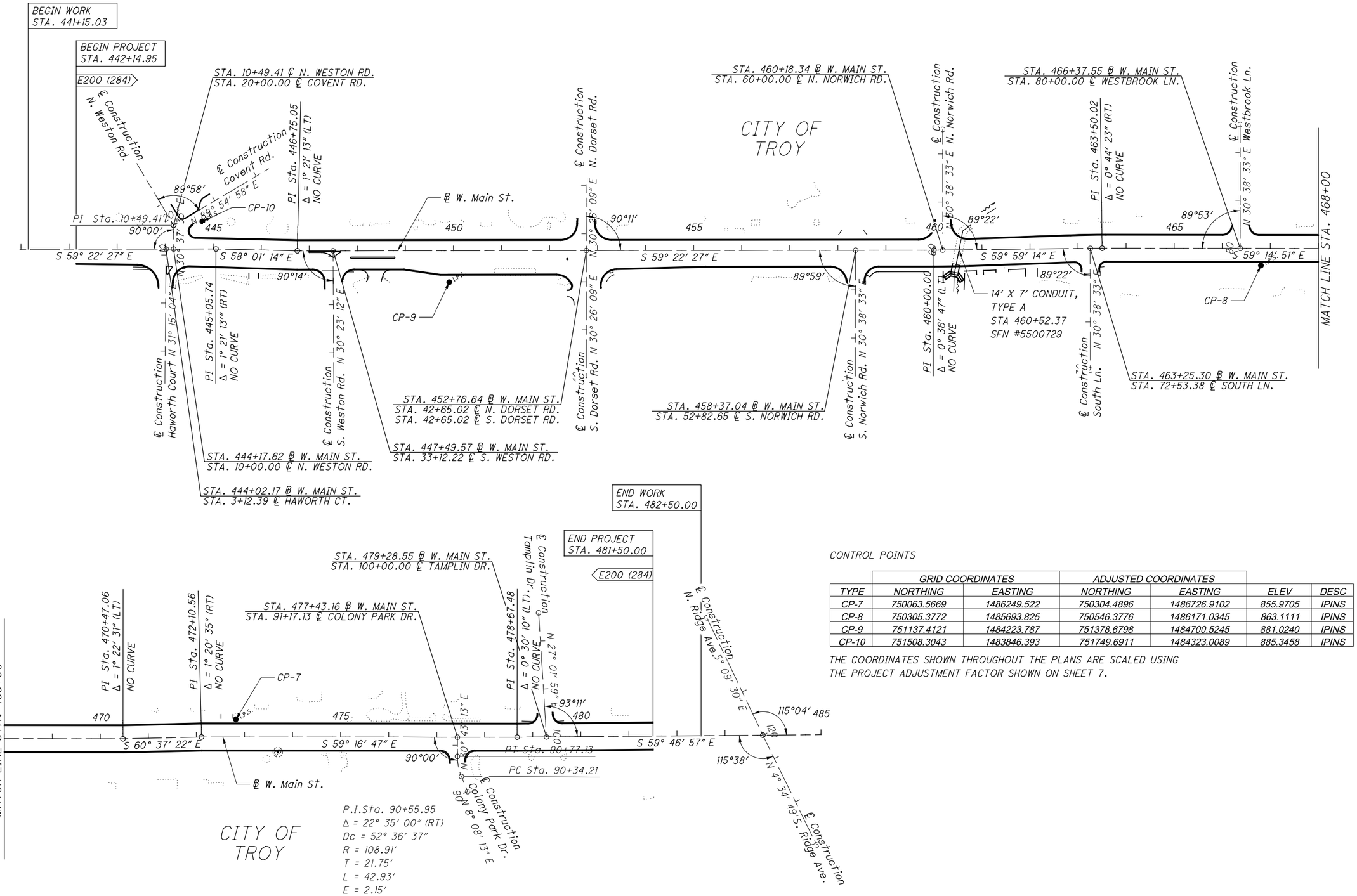

CONTROL POINTS

	GRID COORDINATES		ADJUSTED COORDINATES			
TYPE	NORTHING	EASTING	NORTHING	EASTING	ELEV	DESC
CP-7	750063.5669	1486249.522	750304.4896	1486726.9102	855.9705	IPINS
CP-8	750305.3772	1485693.825	750546.3776	1486171.0345	863.1111	IPINS
CP-9	751137.4121	1484223.787	751378.6798	1484700.5245	881.0240	IPINS
CP-10	751508.3043	1483846.393	751749.6911	1484323.0089	885.3458	IPINS

THE COORDINATES SHOWN THROUGHOUT THE PLANS ARE SCALED USING
THE PROJECT ADJUSTMENT FACTOR SHOWN ON SHEET 7.

SCHEMATIC PLAN

MIA-41-10.32

S:\CIN\4300--4399\4354\004\Drawings\CAD\110253\roadway\sheets\110253GB001.dgn 10/1/2021 4:37:51 PM Allisonw
10/1/2021

LEGEND

(A) Existing Asphalt Layer (6")

(B) Existing Asphalt Layer (7")

(C) Existing Asphalt Layer (12")

(D) Existing Granular Base Layer (10")

(E) Existing Subgrade

(F) Existing Concrete Sidewalk

(G) Existing Concrete Curb

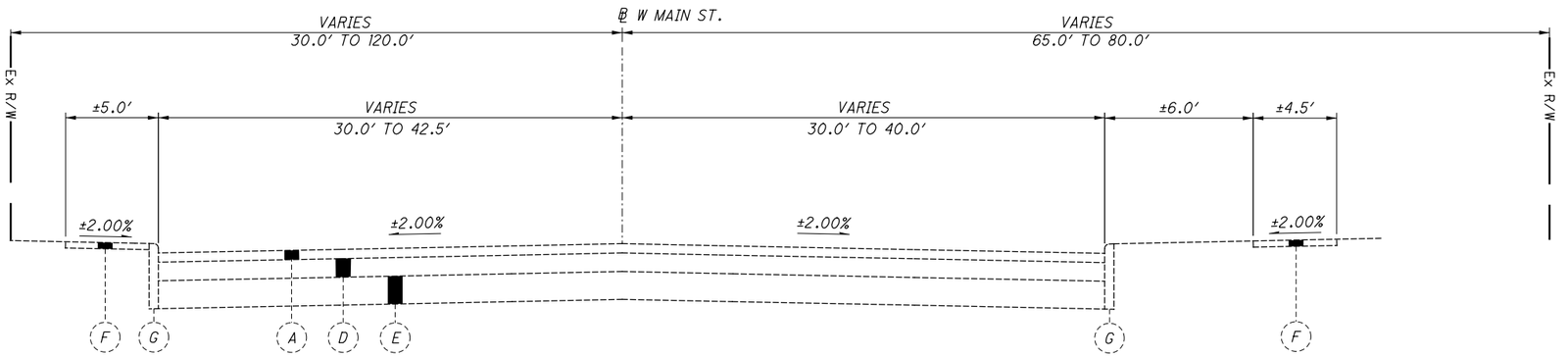

TYPICAL SECTION, WEST MAIN STREET

STA. 441+15 TO STA 442+16

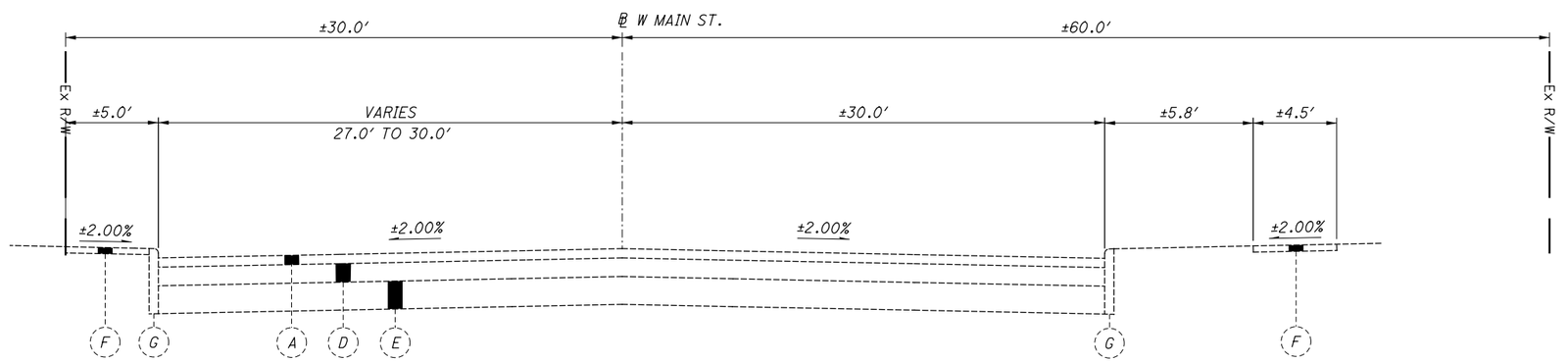

TYPICAL SECTION, WEST MAIN STREET

STA. 442+16 TO STA 444+16

TYPICAL SECTIONS - EXISTING

MIA-41-10.32

S:\CIN\4300--4399\4354\004\Drawings\CAD\110253\roadway\sheets\110253GY001.dgn 10/1/2021 4:37:51 PM Allisonw

LEGEND

(A) Existing Asphalt Layer (6")

(B) Existing Asphalt Layer (7")

(C) Existing Asphalt Layer (12")

(D) Existing Granular Base Layer (10")

(E) Existing Subgrade

(F) Existing Concrete Sidewalk

(G) Existing Concrete Curb

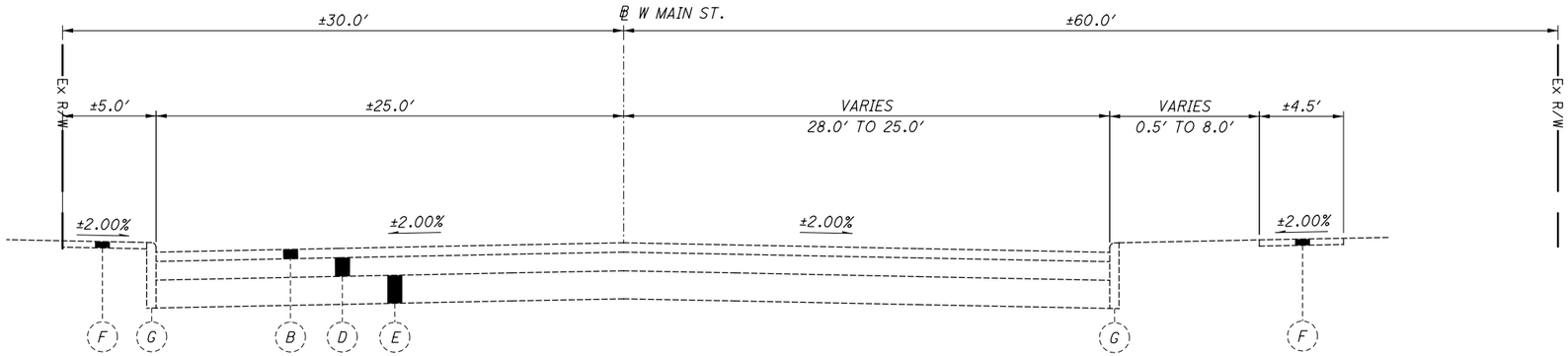

TYPICAL SECTION, WEST MAIN STREET

STA. 444+16 TO STA 462+85

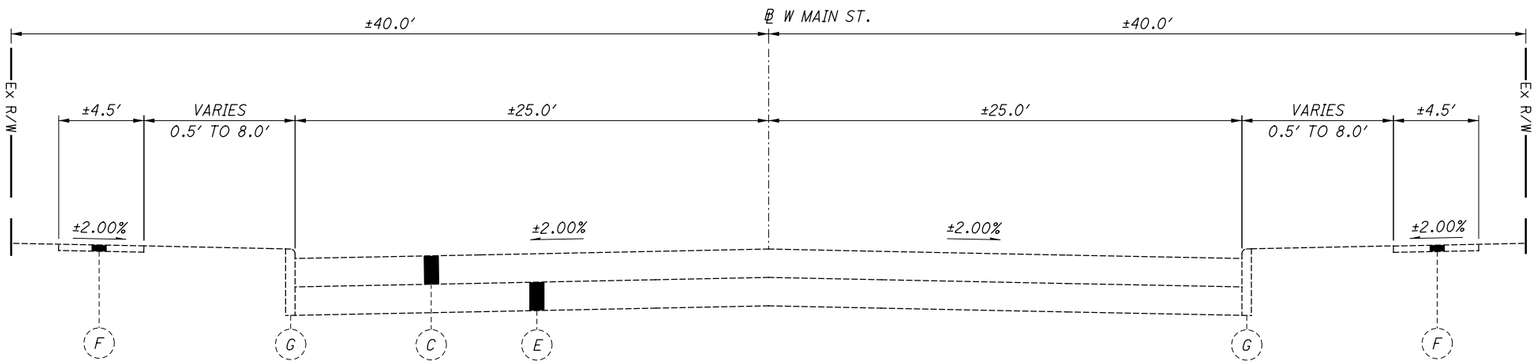

TYPICAL SECTION, WEST MAIN STREET

STA. 462+85 TO STA 481+50

TYPICAL SECTIONS - EXISTING

MIA-41-10.32

S:\CIN\4300--4399\4354\004\Drawings\CAD\110253\roadway\sheets\110253GY002.dgn 10/1/2021 4:37:52 PM Allisonw

LEGEND

1. ITEM 441 - 1¼" ASPHALT CONCRETE SURFACE COURSE, TYPE 1, (448), PG64-22
2. ITEM 441 - 1¾" ASPHALT CONCRETE INTERMEDIATE COURSE, TYPE 2, (448)
3. NOT USED
4. ITEM 302 - 9" ASPHALT CONCRETE BASE, PG64-22
5. ITEM 304 - 6" AGGREGATE BASE
5A. ITEM 304 - 4" AGGREGATE BASE
6. ITEM 407 - TACK COAT
7. ITEM 204 - SUBGRADE COMPACTION
8. ITEM 605 - 6" BASE PIPE UNDERDRAIN
9. ITEM 608 - 5" CONCRETE WALK
10. ITEM 452- 4" NON-REINFORCED CONCRETE PAVEMENT, CLASS QC 1P
11. ITEM 609 - COMBINATION CURB AND GUTTER, TYPE 2, AS PER PLAN
12. ITEM 659 - SEEDING AND MULCHING
13. ITEM 659 - TOPSOIL, 4"
14. ITEM 204 - EXCAVATION OF SUBGRADE
15. ITEM 204 - GRANULAR MATERIAL, TYPE B, 12"
16. ITEM 204 - GEOTEXTILE FABRIC
17. ITEM 254 - VARIABLE DEPTH PAVEMENT PLANING, ASPHALT CONCRETE (1.5" TO 6")
18. ITEM 609- CURB, TYPE 6, AS PER PLAN

(H) EXISTING PAVEMENT (SEE SHEETS 3-4)

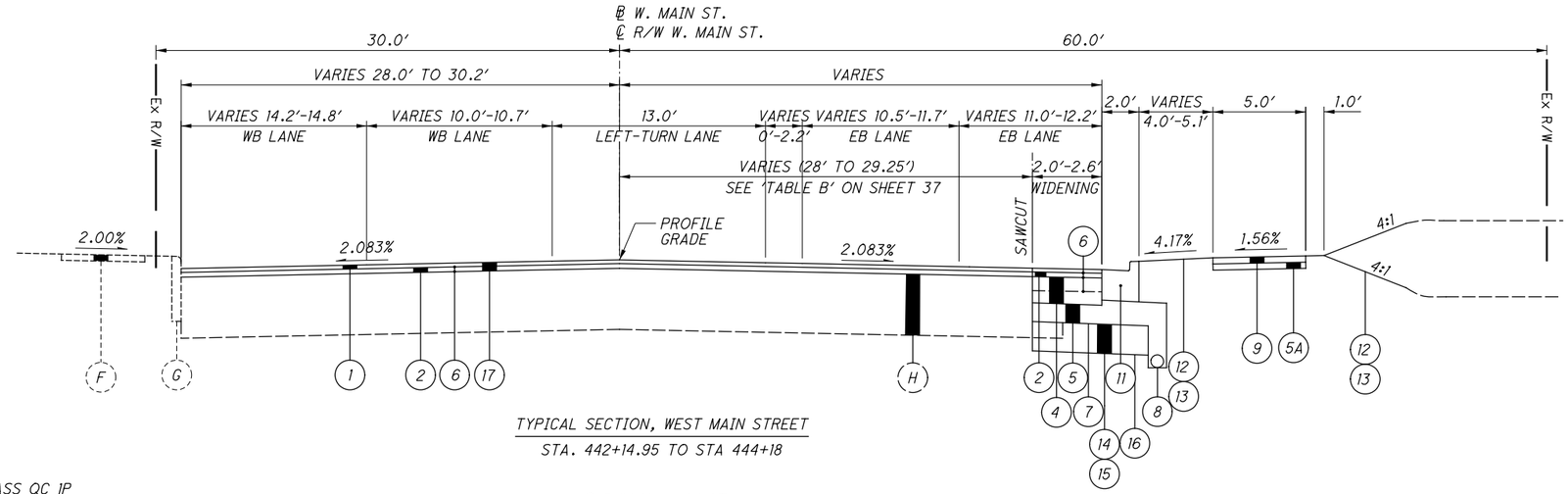

TYPICAL SECTION, WEST MAIN STREET
STA. 442+14.95 TO STA 444+18

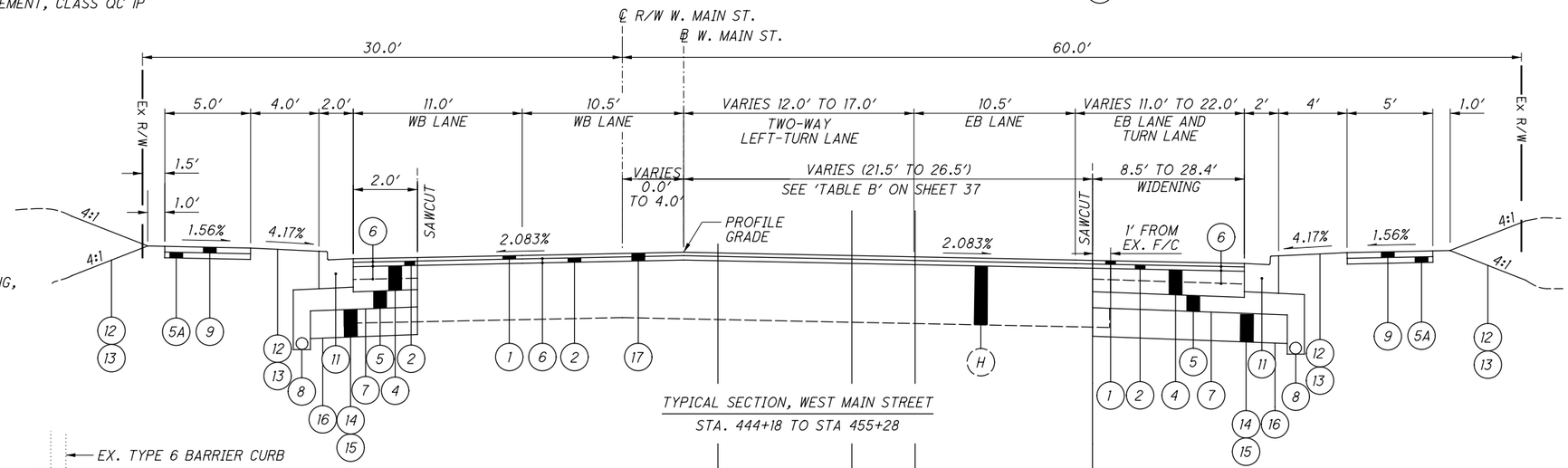

TYPICAL SECTION, WEST MAIN STREET
STA. 444+18 TO STA 455+28

A A B B

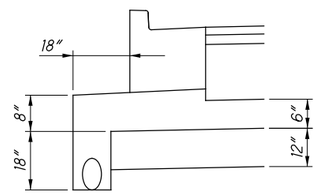

TYPICAL PAVEMENT STEP DETAIL WITH UNDERDRAIN

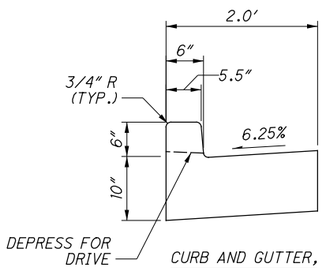

CURB AND GUTTER, TYPE 2 DETAIL

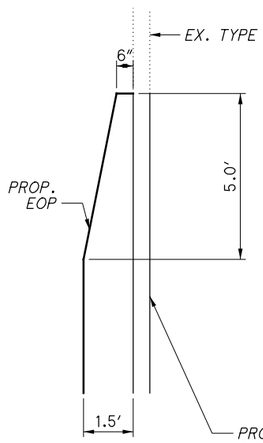

PLAN VIEW

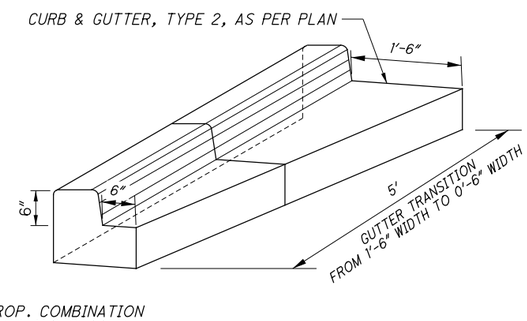

ISOMETRIC DRAWING

CURB TRANSITION

THE WORK SHOWN IN THIS DETAIL SHALL BE PAID FOR UNDER ITEM 609 - COMBINATION CURB AND GUTTER, TYPE 2, AS PER PLAN.

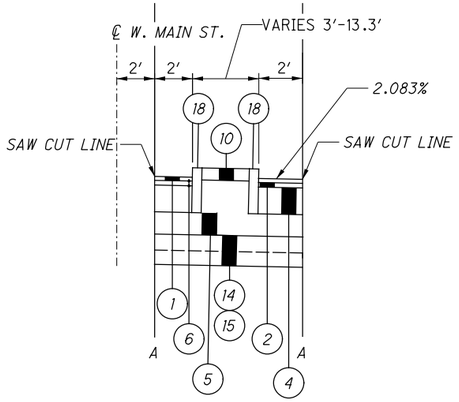

STA. 446+96.05 TO STA. 447+69.46

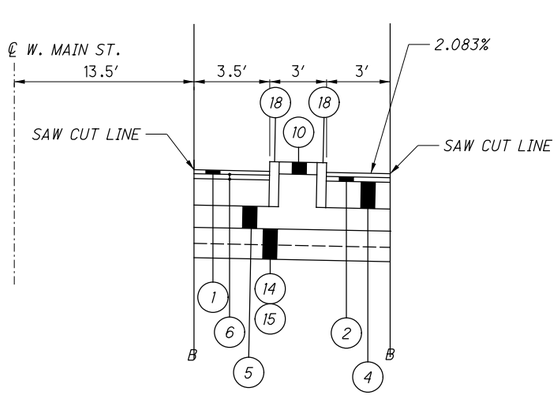

STA. 447+82.39 TO STA. 448+81.74

TYPICAL SECTIONS - PROPOSED

MIA-41-10.32

S:\CIN\4300--4399\4354\004\Drawings\CAD\110253\roadway\sheets\110253GY003.dgn 10/1/2021 4:37:52 PM Allisonw

LEGEND

(1) ITEM 441 - 1¼" ASPHALT CONCRETE SURFACE COURSE, TYPE 1, (448), PG64-22

(2) ITEM 441 - 1¾" ASPHALT CONCRETE INTERMEDIATE COURSE, TYPE 2, (448)

(3) NOT USED

(4) ITEM 302 - 9" ASPHALT CONCRETE BASE, PG64-22

(5) ITEM 304 - 6" AGGREGATE BASE

(5A) ITEM 304 - 4" AGGREGATE BASE

(6) ITEM 407 - TACK COAT

(7) ITEM 204 - SUBGRADE COMPACTION

(8) ITEM 605 - 6" BASE PIPE UNDERDRAIN

(9) ITEM 608 - 5" CONCRETE WALK

(10) ITEM 452- 4" NON-REINFORCED CONCRETE PAVEMENT, CLASS QC 1P

(11) ITEM 609 - COMBINATION CURB AND GUTTER, TYPE 2, AS PER PLAN

(12) ITEM 659 - SEEDING AND MULCHING

(13) ITEM 659 - TOPSOIL, 4"

(14) ITEM 204 - EXCAVATION OF SUBGRADE

(15) ITEM 204 - GRANULAR MATERIAL, TYPE B, 12"

(16) ITEM 204 - GEOTEXTILE FABRIC

(17) ITEM 254 - VARIABLE DEPTH PAVEMENT PLANING, ASPHALT CONCRETE (1.5" TO 6")

(H) EXISTING PAVEMENT (SEE SHEETS 3-4)

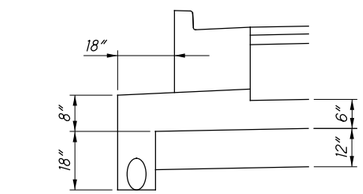

TYPICAL PAVEMENT STEP DETAIL WITH UNDERDRAIN

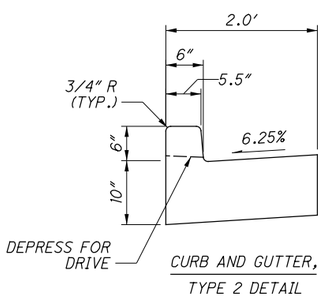

CURB AND GUTTER, TYPE 2 DETAIL

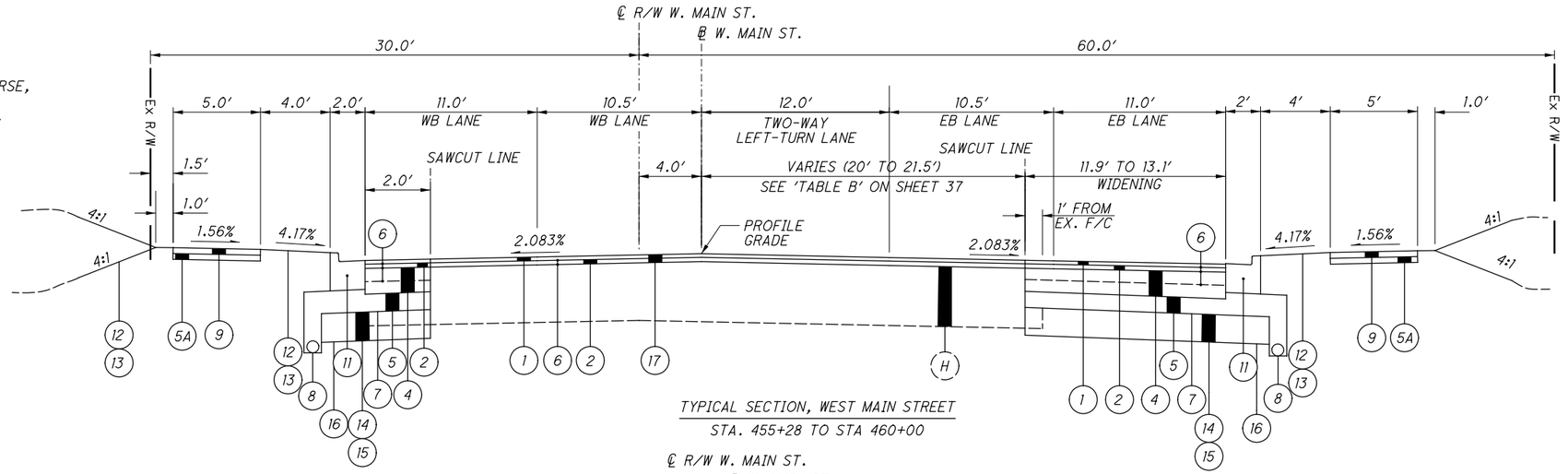

TYPICAL SECTION, WEST MAIN STREET
STA. 455+28 TO STA 460+00

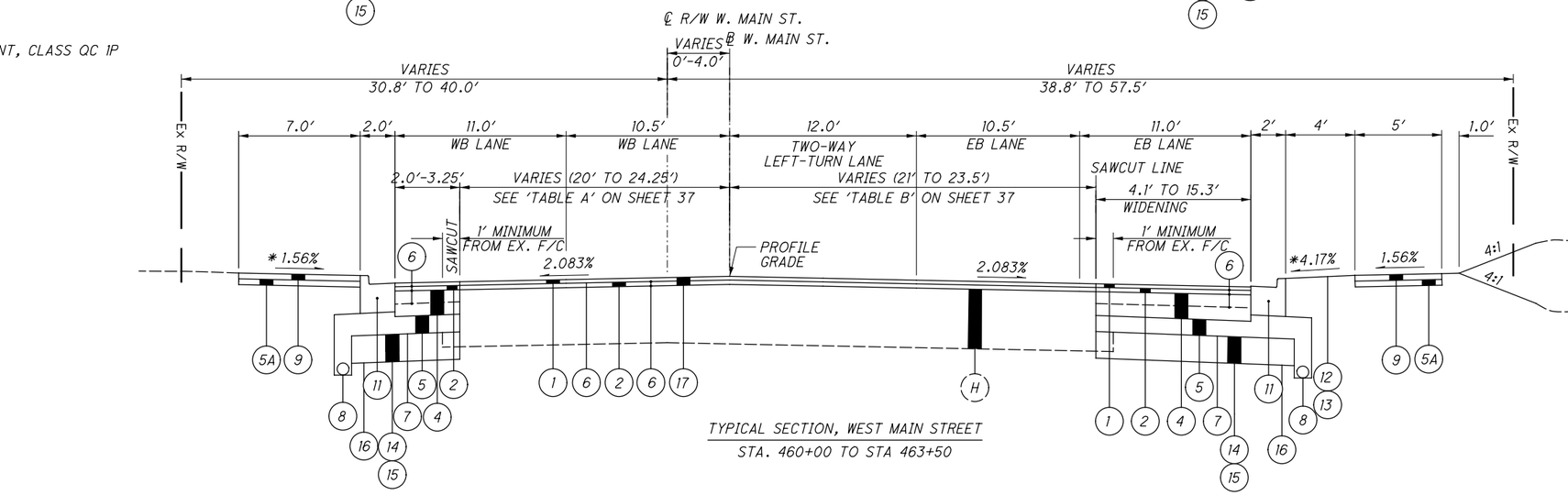

TYPICAL SECTION, WEST MAIN STREET
STA. 460+00 TO STA 463+50

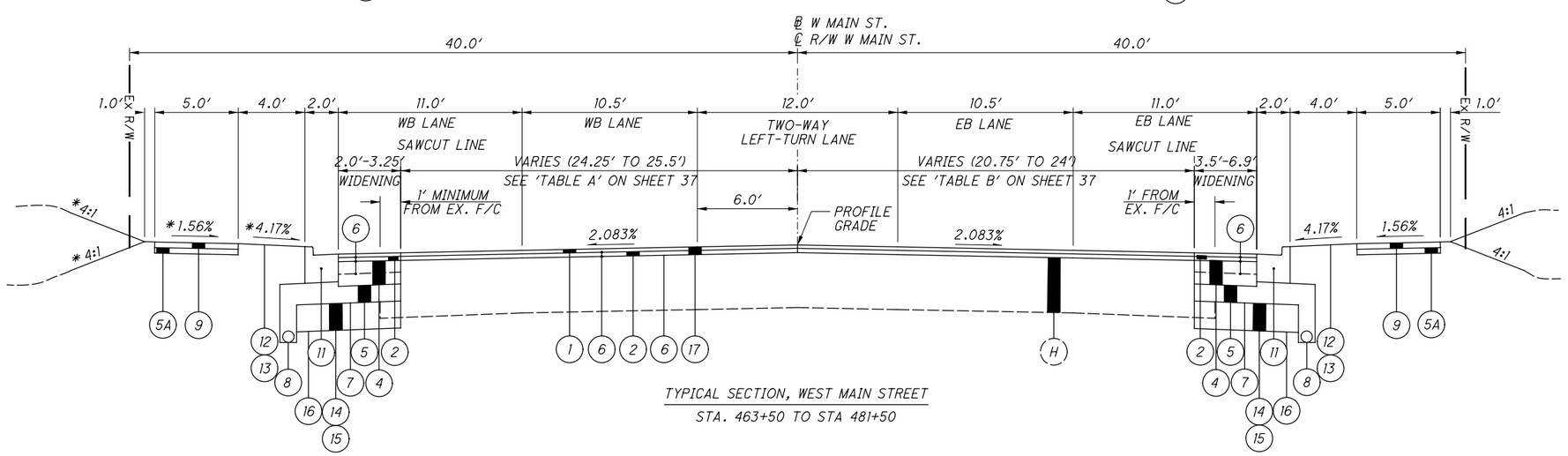

TYPICAL SECTION, WEST MAIN STREET
STA. 463+50 TO STA 481+50

* OR AS MARKED IN CROSS SECTIONS

TYPICAL SECTIONS - PROPOSED

MIA-41-10.32

S:\CIN\4300--4399\4354\004\Drawings\CAD\110253\roadway\sheets\110253GY004.dgn 10/1/2021 4:37:52 PM Allisonw

ROUNDING

THE ROUNDING AT SLOPE BREAKPOINTS SHOWN ON THE TYPICAL SECTIONS APPLIES TO ALL CROSS-SECTIONS EVEN THOUGH OTHERWISE SHOWN.

UTILITIES

LISTED BELOW ARE ALL UTILITIES LOCATED WITHIN THE PROJECT CONSTRUCTION LIMITS TOGETHER WITH THEIR RESPECTIVE OWNERS:

TELECOM:
CHARTER COMMUNICATIONS
3691 TURNER ROAD
DAYTON, OH 45415
PHONE: (937) 396-8372

TELEPHONE:
AT&T
7201 FAR HILLS AVENUE
DAYTON, OH 45459
PHONE: (937) 296-3588

FIBER OPTIC:
CENTURY LINK
1025 ELDORADO BLVD
BROOMFIELD, CO 80021
PHONE: (720) 888-1089

GAS:
CENTERPOINT ENERGY
1335 E DAYTON YELLOW
SPRING ROAD
FAIRBORN, OH 45324
PHONE: (800) 339-6594

TELECOM:
FRONTIER COMMUNICATIONS
10 MULBERRY ST.
BROOKVILLE, OH 45309
PHONE: (937) 833-0468
PHONE: (541) 390-3910

WATER:
CITY OF TROY
100 S MARKET ST
TROY, OH 45373
PHONE: (937) 335-4151

ELECTRIC:
THE DAYTON POWER
AND LIGHT COMPANY
1065 WOODMAN DRIVE
DAYTON, OH 45432
PHONE: (937) 331-4521

THE LOCATION OF THE UNDERGROUND UTILITIES SHOWN ON THE PLANS ARE AS OBTAINED FROM THE OWNERS AS REQUIRED BY SECTION 153.64 O.R.C.

WORK LIMITS

THE WORK LIMITS SHOWN ON THESE PLANS ARE FOR PHYSICAL CONSTRUCTION ONLY. PROVIDE THE INSTALLATION AND OPERATION OF ALL WORK ZONE TRAFFIC CONTROL AND WORK ZONE TRAFFIC CONTROL DEVICES REQUIRED BY THESE PLANS WHETHER INSIDE OR OUTSIDE THESE WORK LIMITS.

CONSTRUCTION NOISE

ACTIVITIES AND LAND USE ADJACENT TO THIS PROJECT MAY BE AFFECTED BY CONSTRUCTION NOISE. IN ORDER TO MINIMIZE ANY ADVERSE CONSTRUCTION NOISE IMPACTS, DO NOT OPERATE POWER-OPERATED CONSTRUCTION-TYPE DEVICES BETWEEN THE HOURS OF 7 PM AND 7 AM. IN ADDITION, DO NOT OPERATE AT ANY TIME ANY DEVICE IN SUCH A MANNER THAT THE NOISE CREATED SUBSTANTIALLY EXCEEDS THE NOISE CUSTOMARILY AND NECESSARILY ATTENDANT TO THE REASONABLE AND EFFICIENT PERFORMANCE OF SUCH EQUIPMENT.

SURVEYING PARAMETERS

PRIMARY PROJECT CONTROL MONUMENTS GOVERN ALL POSITIONING ON ODOT PROJECTS. SEE SHEET 2 OF THE PLANS FOR A TABLE CONTAINING PROJECT CONTROL INFORMATION.

USE THE FOLLOWING PROJECT CONTROL, VERTICAL POSITIONING, AND HORIZONTAL POSITIONING PARAMETERS FOR ALL SURVEYING:

PROJECT CONTROL

POSITIONING METHOD: MIN. 5 VRS-DERIVED GNSS OBSERVATIONS
MONUMENT TYPE: IRON PIN

VERTICAL POSITIONING

ORTHOMETRIC HEIGHT DATUM: NAVD88
GEOID: GEOID12A

HORIZONTAL POSITIONING

REFERENCE FRAME: NAD83 (2011)
ELLIPSOID: GRS80
MAP PROJECTION: LAMBERT CONFORMAL CONIC
COORDINATE SYSTEM: OHIO STATE PLANE - SOUTH ZONE
COMBINED SCALE FACTOR: 1.0000321I (GROUND TO GRID MULTIPLIER)
ORIGIN OF COORDINATE
SYSTEM: 0,0

USE THE POSITIONING METHODS AND MONUMENT TYPE USED IN THE ORIGINAL SURVEY TO RESTORE ALL MONUMENTS RELATED TO PRIMARY PROJECT CONTROL THAT ARE DAMAGED OR DESTROYED BY CONSTRUCTION ACTIVITIES. RESTORE THE DAMAGED OR DESTROYED MONUMENTS IN ACCORDANCE WITH CMS 623.

UNITS ARE IN U.S. SURVEY FEET. USE THE FOLLOWING CONVERSION FACTOR: 1 METER = 3.280833333 U.S. SURVEY FEET.

AIRWAY/HIGHWAY CLEARANCE FOR AIRPORTS AND HELIPORTS

THIS PROJECT HAS BEEN IDENTIFIED AS BEING WITHIN THE INFLUENCE AREA OF A PUBLIC USE AIRPORT OR HELIPORT. NO TEMPORARY STRUCTURES OR CONSTRUCTION EQUIPMENT AT MAXIMUM OPERATING HEIGHT SHALL EXCEED A HEIGHT OF 50 FT. IF ANY TEMPORARY STRUCTURES OR CONSTRUCTION EQUIPMENT WILL EXCEED THIS HEIGHT, FURTHER COORDINATION WITH THE FEDERAL AVIATION ADMINISTRATION (FAA), AND ODOT OFFICE OF AVIATION, WILL BE NECESSARY PRIOR TO ERECTING SUCH TEMPORARY STRUCTURES OR OPERATING SUCH EQUIPMENT ON THE PROJECT. THE CONTRACTOR WILL BE REQUIRED TO SUBMIT FORM 7460-1 TO THE FAA. NOTIFY THE ODOT OFFICE OF AVIATION WHEN SUBMITTING AN FAA FORM 7460-1.

NO TEMPORARY STRUCTURES OR CONSTRUCTION EQUIPMENT SHALL EXCEED THE PERMISSIBLE HEIGHT, UNTIL A COPY OF THE FAA APPROVAL AND ODOT OFFICE OF AVIATION PERMIT HAS BEEN FURNISHED TO THE PROJECT ENGINEER.

FEDERAL AVIATION ADMINISTRATION
SOUTHWEST REGIONAL OFFICE
OBSTRUCTION EVALUATION GROUP
10101 HILLWOOD PARKWAY
FORT WORTH, TX 76177
FAX: (812) 222-5920
HTTP://CEAAA.FAA.GOV

OHIO DEPARTMENT OF
TRANSPORTATION
OFFICE OF AVIATION
2829 W. DUBLIN-GRANVILLE RD
COLUMBUS, OHIO 43235
614-387-2346

ITEM 204 - SUBGRADE COMPACTION AND PROOF ROLLING

CONSTRUCT THE SUBGRADE AS FOLLOWS AND IN THE FOLLOWING SEQUENCE:

1. SHAPE THE SUBGRADE TO WITHIN 0.2 FEET OF THE PLAN SUBGRADE ELEVATION.

2. EXCAVATE AND REPLACE UNSUITABLE SUBGRADE BEFORE PROOF ROLLING. THE EXCAVATION LIMITS ARE SHOWN AND LABELED ON THE CROSS SECTIONS AS UNSUITABLE SUBGRADE. UNSUITABLE SUBGRADE INCLUDES UNSUITABLE SOIL (A-4B, A-2-5, A-5, A-7-5, AND SOIL WITH A LIQUID LIMIT GREATER THAN 65) AND ANY COAL, SHALE, OR ROCK WHICH NEEDS TO BE REMOVED ACCORDING TO 204.05.

   IF THERE IS UNSUITABLE SUBGRADE IN A SHALLOW FILL LOCATION, EXCAVATE AND REPLACE THE UNSUITABLE SUBGRADE BEFORE CONSTRUCTING THE SHALLOW FILL AND SHAPING THE SUBGRADE.

3. COMPACT THE SUBGRADE ACCORDING TO 204.03.

4. APPROXIMATE LIMITS FOR EXCAVATION OF UNSTABLE SUBGRADE ARE SHOWN AND LABELED ON THE CROSS SECTIONS AS UNSTABLE SUBGRADE. THE ENGINEER WILL IDENTIFY THE ACTUAL LIMITS OF EXCAVATION FOR UNSTABLE SUBGRADE BASED ON THE PROOF ROLLING RESULTS AND VISUAL OBSERVATIONS.

   PROOF ROLL THE COMPACTED SUBGRADE ACCORDING TO 204.06.

5. EXCAVATE UNSTABLE SUBGRADE AS DIRECTED BY THE ENGINEER AND STABILIZE BY REPLACING WITH THE SPECIFIED MATERIALS ACCORDING TO 204.07. EXCAVATIONS WILL EXTEND 18 INCHES BEYOND THE EDGE OF THE SURFACE OF THE PAVEMENT, PAVED SHOULDERS, OR PAVED MEDIANS.

6. PROOF ROLL THE STABILIZED AREAS ACCORDING TO 204.06 TO VERIFY STABILITY.

7. FINE GRADE THE SUBGRADE TO THE SPECIFIED GRADE.

THE QUANTITIES FOR EXCAVATING THE UNSUITABLE SUBGRADE AND UNSTABLE SUBGRADE ARE BOTH PAID UNDER ITEM 204 EXCAVATION OF SUBGRADE.

ITEM 204 - PROOF ROLLING

THE FOLLOWING QUANTITY IS PROVIDED IN THE GENERAL SUMMARY TO ADDRESS LOCATIONS REQUIRING PROOF ROLLING.

ITEM 204 - PROOF ROLLING	16 HOUR.

CLEARING AND GRUBBING

REMOVE ALL TREES AND STUMPS SPECIFICALLY MARKED FOR REMOVAL WITHIN THE CONSTRUCTION LIMITS UNDER THE LUMP SUM BID FOR ITEM 201, CLEARING AND GRUBBING. THE FOLLOWING IS AN APPROXIMATE ESTIMATE OF THE NUMBER OF TREES AND STUMPS TO BE REMOVED.

SIZES	NO. TREES	NO. STUMPS	TOTAL
18"	24	2	26
30"	8	0	8
48"	2	0	2

SEEDING AND MULCHING

THE FOLLOWING QUANTITIES ARE PROVIDED TO PROMOTE GROWTH AND CARE OF PERMANENT SEEDED AREAS:

659, SOIL ANALYSIS TEST 2 EACH

659, TOPSOIL 960 CU. YD.

659, SEEDING AND MULCHING 8,650 SQ. YD.

659, REPAIR SEEDING AND MULCHING 435 SQ. YD.

659, INTER-SEEDING 435 SQ. YD.

659, COMMERCIAL FERTILIZER 1.2 TON

659, LIME 1.8 ACRES

659, WATER 48 M. GAL.

659, MOWING 20 M. SQ. FT.

SEEDING AND MULCHING SHALL BE APPLIED TO ALL AREAS OF EXPOSED SOIL BETWEEN THE RIGHT-OF-WAY LINES, AND WITHIN THE CONSTRUCTION LIMITS FOR AREAS OUTSIDE THE RIGHT-OF-WAY LINES COVERED BY WORK AGREEMENT OR SLOPE EASEMENT. QUANTITY CALCULATIONS FOR SEEDING AND MULCHING ARE BASED ON THESE LIMITS.

PART-WIDTH CONSTRUCTION

BECAUSE OF THE NECESSITY TO BUILD THIS PROJECT UNDER TRAFFIC AND TO CONSTRUCT THE FULL PAVEMENT WIDTH IN STAGES, EXERCISE CARE TO PREVENT THE CONSTRUCTION OF A BUTT JOINT IN THE BASE COURSES. LAP LONGITUDINAL JOINTS AS SHOWN ON STANDARD CONSTRUCTION DRAWING BP-3.1.

CALCULATED ATW
CHECKED JCH

GENERAL NOTES

MIA-41-10.32

S:\CIN\4300--4399\4354\004\Drawings\CAD\110253\roadway\sheets\110253GN001.dgn 10/1/2021 4:37:53 PM Alisonw

ITEM 202 - REMOVAL MISC.: PAVER WALKWAY REMOVED

THIS WORK SHALL CONSIST OF REMOVAL OF EXISTING PAVER SIDEWALK IN THE AREAS DESIGNATED IN THE PLANS. PAYMENT FOR THIS ITEM SHALL BE PER SQUARE FOOT AND INCLUDE ALL LABOR, EQUIPMENT, AND MATERIALS NECESSARY TO REMOVE AND DISPOSE OF THE PAVER SIDEWALK.

ITEM 202 - REMOVAL MISC.: REMOVE AND RESET LANDSCAPING BLOCKS

THIS ITEM INCLUDES THE LABOR, MATERIALS, AND EQUIPMENT NECESSARY TO PERFORM THIS WORK. THE WORK INCLUDES REMOVAL OF THE EXISTING WALL BLOCKS, STORAGE, AND RE-INSTALLATION. THE CONTRACTOR SHALL COORDINATE WITH THE PROPERTY OWNER ON THE STORAGE LOCATION OF THE WALL BLOCKS DURING CONSTRUCTION, AND ON THE FINAL LOCATION OF THE LANDSCAPING WALL. PAYMENT FOR THIS ITEM WILL BE PER LINEAR FOOT.

ITEM 202 - FENCE REMOVED FOR REUSE, AS PER PLAN

THE CONTRACTOR IS TO REMOVE THE FENCE IN COMPLIANCE WITH SECTION 202 OF THE ODOT CMS. THE CONTRACTOR SHALL COORDINATE WITH THE FENCE OWNER FOR STORAGE LOCATION. THIS ITEM INCLUDES ALL LABOR, MATERIALS, AND EQUIPMENT NECESSARY TO COMPLETE THIS WORK. THE CONTRACTOR IS RESPONSIBLE FOR ANY DAMAGE THE FENCE UNDERGOES DURING THIS WORK AND SHALL PAY FOR THIS DAMAGE AT NO COST TO THE PROJECT.

FENCE LENGTHS

THE LENGTHS OF FENCE SHOWN IN THE PLANS ARE HORIZONTAL DIMENSIONS. MEASUREMENTS OF THE FINAL QUANTITIES WILL BE IN ACCORDANCE WITH ITEM 607.

ITEM 202 - REMOVAL MISC.: PIPE REMOVED AND CURB AND PAVEMENT RECONSTRUCTED

THIS WORK SHALL CONSIST OF REMOVING PIPE AND REPAIRING THE EXISTING PAVEMENT IN AREAS WHERE PROPOSED STORM IMPROVEMENTS IMPACT PRIVATELY-OWNED PARKING LOTS. THIS ITEM SHALL CONFORM TO ODOT CMS 611 TO REMOVE PIPES, 24" AND UNDER. WHEN PERFORMING THIS WORK, THE CONTRACTOR SHALL MINIMIZE DAMAGE TO THE EXISTING PARKING LOT CURB AND PAVEMENT.

FOLLOWING THE PROPOSED DRAINAGE WORK, THE CONTRACTOR SHALL FURNISH AND INSTALL PAVEMENT AND CURB IN CONFORMANCE WITH THE ODOT CMS. ALL PAVEMENT WORK INCLUDING BUT NOT LIMITED TO ASPHALT CONCRETE BASE, ASPHALT SURFACE AND INTERMEDIATE COURSES, SHALL BE INCIDENTAL TO THIS ITEM. PAVEMENT DEPTH SHALL BE EQUAL TO OR GREATER THAN THE EXISTING PARKING LOT PAVEMENT DEPTH. CURB SHALL CLOSELY MATCH THE EXISTING CURB OF THE PARKING LOT.

THIS PAY ITEM SHALL INCLUDE ALL LABOR, MATERIAL, AND EQUIPMENT TO COMPLETE THE WORK DESCRIBED ABOVE. PAYMENT FOR THIS ITEM WILL BE PER EACH PIPE REMOVED.

ITEM 625 - LIGHT POLE REMOVED, AS PER PLAN

EXISTING LIGHTING EQUIPMENT IS TO BE REMOVED IN ACCORDANCE WITH SECTION 625 OF THE ODOT CMS. REMOVED LIGHTING EQUIPMENT IS TO BE DELIVERED BY THE CONTRACTOR TO THE BELOW LOCATION FOR PICKUP BY THE OWNER:

ITEM 608 - WALKWAY, MISC.: PAVER WALKWAY

THIS ITEM SHALL INCLUDE ALL LABOR, MATERIALS, AND EQUIPMENT TO INSTALL THE CONCRETE PAVER SIDEWALK AS SHOWN IN THE PLANS. CONCRETE PAVERS SUPPLIED FOR THE SIDEWALK CONSTRUCTION SHALL MATCH MATERIAL, COLOR, AND SHAPE OF THE EXISTING PAVERS. THE FINAL PAVERS WILL BE CHOSEN BY THE CITY AFTER REVIEW OF SAMPLES SUPPLIED BY THE CONTRACTOR. THE PAVERS SHALL NOT BE ORDERED UNTIL APPROVED. THE CONCRETE BASE SHALL BE A FOUR INCH THICK CONCRETE SIDEWALK BASE CONFORMING TO ITEM 608.

THE CONTRACTOR SHALL PREPARE A SAMPLE PATTERN WITH APPROVED PAVERS TO CONFIRM THE EXACT DIMENSIONS PRIOR TO CONSTRUCTING THE CONCRETE BASE AND WALK. THE PAVERS SHALL BE CONSTRUCTED ON A ONE INCH THICK SAND BED ON A 712.09 TYPE A FILTER FABRIC ON A CONCRETE BASE AND AGGREGATE BASE AS SHOWN IN THE DETAIL ON THIS SHEET.

THIS WORK SHALL BE PERFORMED AT THE DIRECTION OF THE CITY. PAYMENT WILL BE ON A SQUARE FOOT BASIS, INCLUDING ALL PAVERS, FILTER, FABRIC, SAND, 4" CONCRETE BASE AND ALL OTHER FORMING AND MATERIAL COSTS NECESSARY TO CONSTRUCT THE BASE AND PAVER SYSTEM PER THE PAVEMENT DETAILS.

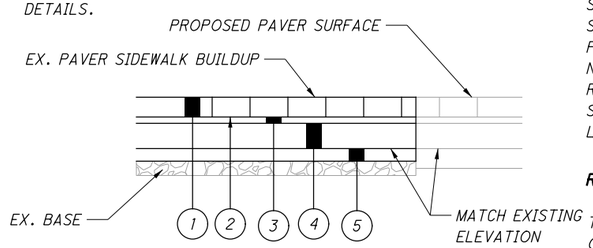

WALKWAY, MISC.: PAVER WALKWAY

1 - CONCRETE PAVERS
2 - FILTER FABRIC
3 - 1" SAND BED
4 - 4" CONCRETE WALK
5 - AGGREGATE BASE (THICKNESS VARIES, 4" TO 8")

ITEM 609 - COMBINATION CURB AND GUTTER, TYPE 3, AS PER PLAN

COMBINATION CURB AND GUTTER, TYPE 3, AS PER PLAN SHALL BE INSTALLED IN ACCORDANCE WITH SECTION 609 OF THE ODOT CMS AND IN ACCORANCE WITH THE CURB DETAIL ON SHEET 99. THE DRAWING PROVIDED IN THESE PLANS SHALL SUPERCEDE THE ODOT CMS FOR THIS ITEM.

ITEM 608 - CURB RAMP, AS PER PLAN: 7" CONCRETE

THIS ITEM INCLUDES THE LABOR, MATERIALS, AND EQUIPMENT NECESSARY TO CONSTRUCT CURB RAMPS PER SECTION 608 OF THE 2019 ODOT CONSTRUCTION AND MATERIAL SPECIFICATIONS MANUAL. THIS ITEM SHALL BE CONSTRUCTED WITH CONCRETE 7-INCHES THICK.

ITEM 608 - 7" CONCRETE WALK, AS PER PLAN

7" CONCRETE WALK, AS PER PLAN, SHALL BE INSTALLED IN ACCORDANCE WITH SECTION 608 OF THE ODOT CMS AND IN ACCORANCE WITH THE DETAIL ON SHEET 99. THE DRAWING PROVIDED IN THESE PLANS SHALL SUPERCEDE THE ODOT CMS FOR THIS ITEM.

ITEM 609 - COMBINATION CURB AND GUTTER, TYPE 2, AS PER PLAN

COMBINATION CURB AND GUTTER, TYPE 2, AS PER PLAN SHALL BE INSTALLED IN ACCORDANCE WITH SECTION 609 OF THE ODOT CMS AND IN ACCORANCE WITH THE CITY OF TROY CONSTRUCTION STANDARD DRAWINGS, CURB DETAILS ON PAGE NO. 300-13. THE CITY OF TROY CONSTRUCTION STANDARD DRAWING SHALL SUPERCEDE THE ODOT CMS FOR THIS ITEM.

ITEM 609 - CURB, TYPE 6, AS PER PLAN

CURB, TYPE 6, AS PER PLAN SHALL BE INSTALLED IN ACCORDANCE WITH SECTION 609 OF THE ODOT CMS AND IN ACCORANCE WITH THE CITY OF TROY CONSTRUCTION STANDARD DRAWINGS, CURB DETAILS ON PAGE NO. 300-13. THE CITY OF TROY CONSTRUCTION STANDARD DRAWING SHALL SUPERCEDE THE ODOT CMS FOR THIS ITEM.

ITEM 630 - REMOVAL OF GROUND MOUNTED MAJOR SIGN AND REERECTION, AS PER PLAN

THIS ITEM SHALL INCLUDE ALL LABOR, MATERIALS, AND EQUIPMENT FOR THE REMOVAL OF THE TROY AREA CHAMBER OF COMMERCE SIGN, SUPPORTS, AND CONCRETE FOUNDATIONS IN THEIR ENTIRETY, STORING THE SIGN AND SUPPORTS, CONSTRUCTING NEW CONCRETE FOUNDATIONS, AND REERECTING THE SIGN AND SUPPORTS ON THE NEW FOUNDATIONS WITH NEW ANCHOR BOLTS. CONSTRUCT REINFORCED CONCRETE FOUNDATIONS IN ACCORDANCE WITH ODOT SCD TC-21.21. THE NEW FOUNDATIONS SHALL BE EQUAL TO OR LARGER THAN THE EXISTING FOUNDATIONS.

REMOVE AND RELOCATE PRIVATE SIGN

THIS WORK SHALL CONSIST OF REMOVAL, STORAGE, AND RESET OF EXISTING PRIVATELY-OWNED SIGNS AND SUPPORTS. THE CONTRACTOR SHALL REMOVE THESE ITEMS IN ACCORDANCE WITH THE ODOT CMS AND COORDINATE WITH THE PROPERTY OWNER ON STORAGE OF THESE ITEMS. THE SIGN SHALL BE RELOCATED BEHIND THE PROPOSED SIDEWALK AND THE CONTRACTOR IS TO CONFIRM RELOCATION WITH THE PROPERTY OWNER BEFORE RESETTING THE ITEMS.

ITEM 202 -	REMOVAL MISC.: REMOVE AND RELOCATE PRIVATE SIGN
ITEM 631 -	REMOVAL MISC.: REMOVE AND RELOCATE PRIVATE SIGN, ELECTRICAL

ITEM 202 - REMOVAL MISC.: GAS MARKER REMOVED

THIS WORK SHALL CONSIST OF REMOVAL OF EXISTING GAS MARKER CONFORMING TO SECTION 202 OF THE ODOT CMS. THIS WORK SHALL INCLUDE ALL LABOR, MATERIALS, AND EQUIPMENT TO PERFORM THIS WORK. PAYMENT FOR THIS ITEM WILL BE PER EACH MARKER REMOVED.

ITEM 611 - MANHOLE, MISC.: SANITARY CLEANOUT RELOCATED

THIS WORK SHALL CONSIST OF REMOVING THE EXISTING CLEANOUT STRUCTURE AND RELOCATING THE CLEANOUT WITHIN THE PROPOSED TREE LAWN, NO LESS THAN 18" BEHIND THE BACK OF CURB. THIS ITEM SHALL INCLUDE THE PIPE LENGTH REQUIRED FOR THIS WORK. PIPE MATERIAL SHALL MATCH THE SIZE AND MATERIAL OF THE EXISTING LATERAL PIPE.

THIS WORK SHALL INCLUDE ALL LABOR, MATERIAL, AND EQUIPMENT NECESSARY TO PERFORM THE WORK IN CONFORMANCE WITH ODOT CMS SECTION 611 AND CITY OF TROY STANDARDS.

MANHOLE ADJUSTED TO GRADE

THIS WORK SHALL CONSIST OF ADJUSTING EXISTING UTILITY MANHOLES, HANDHOLES, AND OTHER STRUCTURES TO PROPOSED GRADE. PAYMENT FOR THESE ITEMS SHALL CONFORM TO THE ODOT CMS AND INCLUDE ALL LABOR, MATERIAL, AND EQUIPMENT TO COMPLETE THE WORK. PAYMENT SHALL BE PER EACH STRUCTURE ADJUSTED.

UTILITIES INCLUDE, BUT ARE NOT LIMITED TO, FIBER OPTIC, TRAFFIC, CCTV, WATER, GAS, TELECOM. THE CONTRACTOR SHALL COORDINATE WITH THE UTILITY OWNER IN ORDER TO COMPLETE THIS WORK.

ITEM 638 -	WATER WORK, MISC.: WATER MANHOLE ADJUSTED TO GRADE
ITEM 611 -	MANHOLE, MISC.: TELE MANHOLE ADJUSTED TO GRADE
ITEM 611 -	MANHOLE, MISC.: PULL BOX ADJUSTED TO GRADE
ITEM 611 -	SPECIAL - GAS VALVE BOX ADJUSTED TO GRADE
ITEM 611 -	MANHOLE, MISC.: GAS SERVICE BOX ADJUSTED TO GRADE
ITEM 625 -	PULL BOX, MISC.: TRAFFIC PULL BOX ADJUSTED TO GRADE

MANHOLE REMOVED AND RESET

THIS WORK SHALL CONSIST OF RECONSTRUCTION OF EXISTING UTILITY MANHOLES, HANDHOLES, AND OTHER STRUCTURES DUE TO MAJOR ELEVATION CHANGES. THESE STRUCTURES SHALL BE REMOVED AND RESET AT PROPOSED GRADE IN CONFORMANCE WITH THE ODOT CMS. WHEN THE PROPOSED LOCATION OF THE STRUCTURE IS WITHIN THE PROPOSED ROADWAY, THE CONTRACTOR SHALL VERIFY THAT THE EXISTING STRUCTURE IS TRAFFIC-RATED. IF THE STRUCTURE IS NOT TRAFFIC-RATED, THE CONTRACTOR SHALL REPLACE THE STRUCTURE WITH A TRAFFIC-RATED ITEM. COST FOR REPLACING THE STRUCTURE DUE TO THIS REASON SHALL BE INCLUDED IN THIS ITEM.

PAYMENT FOR THIS ITEM SHALL BE PER EACH ITEM RESET AND INCLUDE ALL LABOR, MATERIAL, AND EQUIPMENT NECESSARY TO PERFORM THE WORK. THE CONTRACTOR SHALL COORDINATE WITH THE UTILITY OWNER IN ORDER TO COMPLETE THIS WORK.

ITEM 611 - MANHOLE, MISC.: REMOVE AND RESET GAS VALVE
ITEM 611 - MANHOLE, MISC.: PULL BOX RECONSTRUCTED TO GRADE

MANHOLE RECONSTRUCTED TO GRADE, AS PER PLAN

THIS WORK SHALL CONSIST OF RECONSTRUCTION OF EXISTING SANITARY AND STORMWATER MANHOLES THAT ARE LOCATED WITHIN THE PROPOSED CURB AND GUTTER. THE CONTRACTOR SHALL REMOVE THE EXISTING CASTING AND WALLS IN CONFORMANCE WITH ODOT CMS SECTION 611. THE STRUCTURE SHALL BE RECONSTRUCTED TO ENSURE THAT THE STRUCTURE DOES NOT CONFLICT WITH THE CURB AND GUTTER DEPTH. THE FRAME AND COVER SHALL BE PLACED EITHER WITHIN THE GUTTER OR AT THE TOP OF THE CURB, AND POSITIONED SUCH THAT THE VERTICAL FACE OF THE CURB IS NOT IMPACTED.

THIS WORK SHALL INCLUDE ALL LABOR, MATERIAL, AND EQUIPMENT NECESSARY TO PERFORM THE WORK IN CONFORMANCE WITH ODOT CMS SECTION 611.

CALCULATED ATW CHECKED JCH

GENERAL NOTES

MIA-41-10.32

S:\CIN\4300-4399\4354\004\Drawings\CAD\110253\roadway\sheets\110253GN002.dgn 10/1/2021 4:37:53 PM Allisonw

\\strand.com\projects\CIN\4300-4399\4354\004\Drawings\CAD\110253\roadway\sheets\110253GN003.dgn Sheet 10/1/2021 4:37:54 PM Allisonw

STORM SEWER NOTES

NO WORK SHALL BE APPROVED OR ACCEPTED BY THE CITY UNLESS 2 WORKING DAYS NOTICE OF COMMENCING WORK IS GIVEN TO THE CITY.

ALL FIELD OR STORM DRAINS WHICH ARE ENCOUNTERED DURING CONSTRUCTION SHALL BE REPAIRED AND PROVIDED WITH UNOBSTRUCTED OUTLETS AS APPROVED AND DIRECTED BY THE CITY AND MARKED ON THE RECORD DRAWING.

ALL STORM SEWER CONSTRUCTION SHALL ADHERE TO THE LATEST VERSION OF THE ODOT C&MS OR WITH THE CITY STORM SEWER SPECIFICATIONS, WHICHEVER IS APPLICABLE AND MORE RESTRICTIVE.

MASTIC MATERIAL IS REQUIRED ON ALL NON O-RING STORM SEWER AND MANHOLES, UNLESS OTHERWISE APPROVED.

ANY DETAILS OR NOTES NOT DIRECTLY ADDRESSED IN THE CITY'S ENGINEERING STANDARDS SHALL BE COORDINATED WITH THE CITY ENGINEERING DEPARTMENT.

ALL STORM SEWER SHALL BE INSTALLED USING A PIPE LASER, INSIDE THE PIPE IF POSSIBLE, FOR GRADE AND ALIGNMENT.

WHERE THE PLANS PROVIDE FOR PROPOSED CONDUIT TO BE CONNECTED TO, OR TO CROSS OVER OR UNDER AN EXISTING SEWER, IT SHALL BE THE RESPONSIBILITY OF THE CONTRACTOR TO LOCATE THE EXISTING PIPE BOTH AS TO LINE AND GRADE BEFORE STARTING TO LAY THE PROPOSED CONDUIT.

STORM SEWER PIPE

ALL STORM SEWER PIPE SHALL HAVE A MINIMUM DIAMETER OF 12" UNLESS OTHERWISE APPROVED.

ALL PIPE MATERIALS SHALL BE INSTALLED PER THE MANUFACTURER'S RECOMENDATIONS FOR DEPTH AND COVER.

TYPES OF PIPE PERMITTED (GREATER THAN 2 FEET OF COVER):
- REINFORCED CINCRETE PIPE
- REINFORCED CONCRETE ELLIPTICAL PIPE
- CORRUGATED POLYETHYLENE SMOOTH-LINED PIPE (N-12) (ONLY TO BE USED OUTSIDE OF THE R/W)
- POLYVINYL CHLORIDE PLASTIC PIPE (NON-PERFORATED)
- POLYPROPYLENE (HP-ADS) DOUBLE WALL 12"-30"
- POLYPROPYLENE (HP-ADS) TRIPLE WALL 36"-60"

TYPES OF PIPE PERMITTED (LESS THAN 2 FEET OF COVER):
- REINFORCED CONCRETE PIPE
- REINFORCED CONCRETE ELLIPTICAL PIPE

THE CITY RESERVES THE RIGHT TO REJECT THE TYPE OF MATERIAL SUBMITTED IF THEY SO CHOSE.

REVIEW OF DRAINAGE FACILITIES

BEFORE ANY WORK IS STARTED ON THE PROJECT AND AGAIN BEFORE FINAL ACCEPTANCE BY THE STATE, REPRESENTATIVES OF THE STATE AND THE CONTRACTOR, ALONG WITH LOCAL REPRESENTATIVES, SHALL MAKE AN INSPECTION OF ALL EXISTING SEWERS WHICH ARE TO REMAIN IN SERVICE AND WHICH MAY BE AFFECTED BY THE WORK. THE CONDITION OF THE EXISTING CONDUITS AND THEIR APPURTENANCE SHALL BE DETERMINED FROM FIELD OBSERVATIONS. RECORDS OF THE INSPECTION SHALL BE KEPT IN WRITING BY THE STATE.

ALL NEW CONDUITS, INLETS, CATCH BASINS, AND MANHOLES CONSTRUCTED AS A PART OF THE PROJECT SHALL BE FREE OF ALL FOREIGN MATTER AND IN A CLEAN CONDITION BEFORE THE PROJECT WILL BE ACCEPTED BY THE STATE.

ALL EXISTING SEWERS INSPECTED INITIALLY BY THE ABOVE MENTIONED PARTIES SHALL BE MAINTAINED AND LEFT IN A CONDITION REASONABLY COMPARABLE TO THAT DETERMINED BY THE ORIGINAL INSPECTION. ANY CHANGE IN THE CONDITION RESULTING FROM THE CONTRACTOR'S OPERATIONS SHALL BE CORRECTED BY THE CONTRACTOR TO THE SATISFACTION OF THE ENGINEER.

PAYMENT FOR ALL OPERATIONS DESCRIBED ABOVE SHALL BE INCLUDED IN THE CONTRACT PRICE FOR THE PERTINENT 611 CONDUIT ITEMS.

PAVEMENT RESTORATION FOR PIPE AND/OR WATERMAIN INSTALLATIONS AND/OR REMOVALS

THE FOLLOWING QUANTITY HAS BEEN PROVIDED FOR PAVEMENT RESTORATION FOLLOWING INSTALLATION AND/OR REMOVAL OF PIPES/WATERMAINS.

ITEM 302 ASPHALT CONCRETE BASE, PG64-22 550 CU. YDS.

THE ABOVE QUANTITY IS BASED ON A 301 THICKNESS OF 9 INCHES AND A PAVEMENT RESTORATION WIDTH THAT INCLUDES THE TRENCH WIDTH PLUS TWO FEET ON EACH SIDE OF THE TRENCH.

PROVIDE ANY MATERIALS USED OUTSIDE THE LIMITS STATED ABOVE AT NO ADDITIONAL COST.

PAVEMENT RESTORATION FOR DRAINAGE STRUCTURE INSTALLATIONS

THE FOLLOWING QUANTITY IS PROVIDED FOR PAVEMENT RESTORATION FOLLOWING INSTALLATION OF ITEM 604 DRAINAGE STRUCTURES.

ITEM 302 ASPHALT CONCRETE BASE, PG64-22 35 CU. YDS.

THE ABOVE QUANTITY IS BASED ON A 302 THICKNESS OF 9 INCHES AND A WIDTH OF TWO FEET AROUND THE PERIMETER OF THE DRAINAGE STRUCTURE.

PROVIDE ANY MATERIALS USED OUTSIDE THE LIMITS STATED ABOVE AT NO ADDITIONAL COST.

POST CONSTRUCTION STORM WATER TREATMENT

THIS PLAN UTILIZES STRUCTURAL BEST MANAGEMENT PRACTICES (BMP'S) FOR POST CONSTRUCTION STORM WATER TREATMENT.

MANUFACTURED WATER QUALITY STRUCTURE, TYPE 4

THIS PLAN UTILIZES MANUFACTURED WATER QUALITY STRUCTURES FOR WATER QUALITY TREATMENT. AREAS ARE SHOWN IN THE PLANS FOR PLACEMENT OF AN OFF-LINE SYSTEM. CONTRACTOR TO INSTALL DIVERSION PIPE AT ELEVATION TO ACHIEVE A MINIMUM WATER QUALITY FLOWRATE (WQF) 6 CFS IN ACCORDANCE WITH ODOT WQF RESTRICTIONS FOR A TYPE 4 MANUFACTURED SYSTEM. TOP OF DIVERSION WIER IN UPSTREAM DIVERSION STRUCTURE FROM MANUFACTURED WATER QUALITY STRUCTURE SHALL BE EQUAL TO THE CROWN OF DIVERSION PIPE ELEVATION UNLESS OTHERWISE APPROVED BY ENGINEER. PAYMENT FOR THESE DEVICES SHALL BE MADE AT THE CONTRACT UNIT PRICE FOR ITEM 895, MANUFACTURED WATER QUALITY STRUCTURE, TYPE 4.

ITEM 202 - CATCH BASIN REMOVED, AS PER PLAN (TRENCH DRAIN)

THIS WORK SHALL INCLUDE ALL LABOR, MATERIALS, AND EQUIPMENT NECESSARY TO REMOVE THE EXISTING TRENCH DRAINAGE STRUCTURE AS SHOWN IN THE PLANS.

ITEM 611 - CONDUIT, MISC.: VIDEO INSPECTION OF SANITARY LATERALS

FOLLOWING THE CONSTRUCTION OF THE PAVEMENT INTERMEDIATE COURSE AND PRIOR TO BEGINNING CONSTRUCTION OF THE PAVEMENT SURFACE COURSE, OR ON A DATE APPROVED BY THE ENGINEER,THE CONTRACTOR SHALL COMPLETE TELEVISING OF THE SANITARY SEWER LATERALS ALONG THE STREETS WHERE WORK IS TO BE PERFORMED. THE TELEVISING SHALL BE PROVIDED TO THE CITY IN THE FORM OF A DVD WITH AN ACCOMPANYING WRITTEN LOG OF THE SYSTEM. THE DVD MUST SHOW THE LOCATION OF ALL LATERALS, THEIR "CLOCK" POSITIONS, AND DISTANCE FROM THE MANHOLE. THE CONTRACTOR SHALL ALSO SUPPLY THE CITY WITH A WRITTEN COPY OF ALL LATERAL LOCATIONS, INCLUDING HORIZONTAL AND VERTICAL LOCATIONS WITHIN THE RIGHT-OF-WAY. THIS SHALL BE ACCOMPLISHED THROUGH THE USE OF A LATERAL LAUNCH CAMERA.

THE CONTRACTOR SHALL NOTIFY THE CITY A MINIMUM OF SEVEN (7) DAYS PRIOR TO TELEVISING EFFORTS. THE CITY WILL PROVIDE SEWER CLEANING SERVICES TO FACILITATE THE TELEVISING OPERATION.

UPON REVIEW OF THE DVD, THE CITY ENGINEER WILL COMPARE THE VIDEO COMPLETED PRIOR TO CONSTRUCTION TO DETERMINE IF ADDITIONAL EXISTING SANITARY LATERALS REQUIRE REPLACEMENT DUE TO CONSTRUCTION OPERATIONS. THE CONTRACTOR SHALL PROVIDE TWO DIGITAL COPIES OF THE POST-CONSTRUCTION SEWER VIDEO ON DVD TO THE CITY.

PAYMENT FOR POST-CONSTRUCTION VIDEO SHALL BE MADE UNDER THE LUMP SUM BID FOR VIDEO INSPECTION OF SANITARY LATERALS.

CALCULATED ATW CHECKED JCH

GENERAL NOTES

MIA-41-10.32

PROTECTION OF BATS

THE PROJECT IS LOCATED WITHIN THE KNOWN HABITAT RANGES OF PROTECTED BAT SPECIES. THE CONTRACTOR SHALL NOT REMOVE TREES UNDER THIS PROJECT FROM APRIL 1 THROUGH SEPTEMBER 30. ALL NECESSARY TREE REMOVAL SHALL OCCUR FROM OCTOBER 1 THROUGH MARCH 31. THE CONTRACTOR SHALL DEMARCATE CLEARING LIMITS IN THE FIELD TO AVOID ANY UNAUTHORIZED TREE CLEARING. FOR THE PURPOSES OF THIS NOTE, A TREE IS DEFINED AS A LIVE, DYING, OR DEAD WOODY PLANT, WITH A TRUNK THREE INCHES OR GREATER IN DIAMETER AT A HEIGHT OF 4.5 FEET ABOVE THE GROUND SURFACE, AND WITH A MINIMUM HEIGHT OF 13 FEET.

THE CONTRACTOR MUST VISUALLY INSPECT WORK AREAS ON THE STRUCTURE FOR EVIDENCE OF ROOSTING BATS 60 DAYS PRIOR TO DEMOLITION. THE PERSON(S) CONDUCTING THE INSPECTION MUST BE CAPABLE OF IDENTIFYING BATS. INSPECTION USING BINOCULARS FROM THE GROUND IS ACCEPTABLE. THE CONTRACTOR MUST PROVIDE WRITTEN CONFIRMATION OF THE INSPECTION TO THE ENGINEER, INCLUDING A STATEMENT INDICATING WHETHER EVIDENCE OF ROOSTING BATS WAS FOUND.

IF NO EVIDENCE OF ROOSTING BATS WERE ENCOUNTERED, CONSTRUCTION ACTIVITIES CAN PROCEED ANY TIME OF THE YEAR.

IF ROOSTING BATS ARE ENCOUNTERED WITHIN THE PROPOSED WORK AREA, CONTACT THE ENGINEER AND ODOT DISTRICT ENVIRONMENTAL COORDINATOR [NAME, CONTACT INFO] IMMEDIATELY. CONSTRUCTION ACTIVITIES CAN ONLY OCCUR BETWEEN OCTOBER 31 AND MARCH 31 UNLESS THE CONTRACTOR BLOCKS ACCESS TO PORTIONS OF THE BRIDGE THAT COULD BECOME ROOSTING LOCATIONS (SUCH AS THE UNDERSIDE OF BRIDGE EXPANSION JOINTS, ETC.) PRIOR TO APRIL 1ST. THE CONTRACTOR MUST PROVIDE WRITTEN CONFIRMATION TO THE ENGINEER INCLUDING A STATEMENT INDICATING MEASURES TAKEN TO BLOCK ACCESS TO ROOSTING LOCATIONS. WORK THAT WOULD RESULT IN HARM TO THE BATS SHALL NOT OCCUR.

PROTECTION OF MIGRATORY BIRDS

THE MIGRATORY BIRD TREATY ACT (MBTA) PROHIBITS THE INTENTIONAL KILLING OR CAPTURE OF NATIVE BIRDS PROTECTED UNDER THE ACT. IF CONSTRUCTION ACTIVITIES ARE TO OCCUR BETWEEN THE DATES OF MAY 1 AND AUGUST 31 ON THIS STRUCTURE, THEN PRIOR TO THE START OF CONSTRUCTION THE CONTRACTOR MUST INSPECT THE STRUCTURE FOR EVIDENCE OF AN ACTIVE BIRD NEST CONTAINING AN EGG OR CHICK. THE CONTRACTOR MUST PROVIDE WRITTEN CONFIRMATION OF THE INSPECTION, INCLUDING A STATEMENT WHETHER AN ACTIVE NEST WAS FOUND, TO THE ENGINEER. IF AN ACTIVE NEST CONTAINING AN EGG OR CHICK IS ENCOUNTERED, IMPACTS TO THE NEST MUST BE AVOIDED UNTIL ALL DEVELOPING BIRDS ARE ABLE TO INDEPENDENTLY FLY FROM THE NEST. IF NO NESTS ARE ENCOUNTERED DURING THE INSPECTION, OR IF ONLY INACTIVE NESTS THAT DO NOT CONTAIN AN EGG OR CHICK ARE ENCOUNTERED, CONSTRUCTION ACTIVITIES CAN PROCEED. INACTIVE NESTS CAN BE REMOVED AND DESTROYED. IF AN ACTIVE NEST CONTAINING AN EGG OR CHICK CANNOT BE AVOIDED, THE CONTRACTOR MUST OBTAIN A DEPREDATION PERMIT FROM THE USFWS PRIOR TO DESTROYING ANY ACTIVE NEST. INFORMATION ON OBTAINING A DEPREDATION PERMIT FROM THE USFWS CAN BE OBTAINED BY CONTACTING THE REGION 3 MIGRATORY BIRD REGIONAL PERMIT OFFICE AT 5600 AMERICAN BLVD. WEST, SUITE 990, BLOOMINGTON, MN 55437-1458, PHONE NUMBER 612-713-5436, EMAIL PERMITSR3MB@FWS.GOV. PROJECTS PERFORMING CONSTRUCTION ACTIVITIES BETWEEN THE DATES OF SEPTEMBER 1 AND APRIL 30 DO NOT REQUIRE AN INSPECTION FOR MIGRATORY BIRDS OR AVOIDANCE MEASURES.

PROTECTION OF DRINKING WATER RESOURCES

BEST CONSTRUCTION PRACTICES ARE TO BE IMPLEMENTED TO MINIMIZE WATER QUALITY IMPACTS. IDLE EQUIPMENT, PETROCHEMICALS, AND TOXIC/HAZARDOUS MATERIALS SHALL NOT BE STORED NEAR DRAINAGE WAYS, DITCHES OR STREAMS. REFUELING SHALL NOT BE UNDERTAKEN NEAR DRAINAGE WAYS, DITCHES OR STREAMS. A SPILL CONTAINMENT KIT IS TO BE MAINTAINED ON-SITE THROUGHOUT CONSTRUCTION ACTIVITIES. SPILLS OF FUELS, OILS, CHEMICALS, OR OTHER MATERIALS WHICH COULD POSE A THREAT TO GROUNDWATER SHALL BE CLEANED UP IMMEDIATELY. IF THE SPILL IS A REPORTABLE AMOUNT, THE LOCAL FIRE DEPARTMENT (911), LOCAL EMERGENCY COORDINATOR (937-339-6400) AND THE OEPA (1-800-282-9378) MUST BE CONTACTED WITHIN 30 MINUTES OF KNOWLEDGE OF THE RELEASE.

MINIMIZE DISTURBANCE

EXISTING PRIVATE LANDSCAPING ELEMENTS LABELLED AS "MINIMIZE DISTURBANCE" ARE INTENDED TO BE PRESERVED BY THE CONTRACTOR THROUGHOUT PROJECT CONSTRUCTION. IN THE EVENT THAT THE PROJECT WORK ENCROACHES ON THESE AREAS, THE CONTRACTOR IS RESPONSIBLE FOR REPLACING LANDSCAPING ELEMENTS IN KIND. THE CONTRACTOR IS RESPONSIBLE FOR COORDINATING WITH THE PROPERTY OWNER ON PLACEMENT OF THESE ITEMS.

ITEM 661, MULCH, SHALL CONFORM TO SECTION 661 OF THE ODOT CMS. ITEM 661, PLANTING, MISC.: LANDSCAPING SHRUB SHALL CONFORM TO THE ODOT CMS AND INCLUDE ALL LABOR, MATERIAL, AND EQUIPMENT TO REPLACE LANDSCAPING SHRUBS IN AFFECTED AREAS.

ITEM 690, SPECIAL - GRAVEL FOR LANDSCAPING SHALL BE FURNISHED AND INSTALLED IN AREAS AS SHOWN ON THE PLANS. THE MATERIAL SHALL MATCH CLOSELY TO THE EXISTING GRAVEL IN THE SAME LANDSCAPING BED. ENGINEER AND PROPERTY OWNER TO APPROVE OF GRAVEL PRIOR TO THE CONTRACTOR PURCHASING THE SUPPLY. THE GRAVEL SHALL BE INSTALLED AT A DEPTH EQUAL TO OR GREATER THAN THE GRAVEL IN THE EXISTING LANDSCAPING BED.

THE FOLLOWING QUANTITIES HAVE BEEN CARRIED TO THE GENERAL SUMMARY:

ITEM 661 - MULCH	50 CY
ITEM 661 - PLANTING, MISC.: LANDSCAPING SHRUB	50 EA
ITEM 690 - SPECIAL - GRAVEL FOR LANDSCAPING	32 SY

ITEM SPECIAL - WORK INVOLVING PETROLEUM CONTAMINATED SOIL

PETROLEUM CONTAMINATED SOILS

ENVIRONMENTAL STUDIES INDICATE PETROLEUM CONTAMINATED SOILS WILL BE ENCOUNTERED DURING CONSTRUCTION ACTIVITIES ADJACENT TO THE FOLLOWING LOCATIONS:

KETTERING MEDICAL CENTER AT 600 WEST MAIN (STA. 504 TO STA. 512)
VALVOLINE AT 750 WEST MAIN (STA. 504 TO STA. 506)
ADVANCED AUTO PARTS AT 772 WEST MAIN (STA. 504 TO STA. 506)
PARKING LOT SOUTH OF STA. 520
OFFICES AT 206 WEST MAIN (STA. 523)
TROY/MIAMI HISTORICAL SOCIETY AT 100 WEST MAIN (STA. 526)

THE CONTRACTOR SHALL MANAGE SOILS FROM DEEP EXCAVATION (6 FEET OR GREATER) OR ACCORDING TO THE FOLLOWING NOTES:

ALL MATERIAL EXCAVATED BY THE CONTRACTOR MAY BE STOCKPILED IN AN AREA PROVIDED BY THE CONTRACTOR AND APPROVED BY THE ENGINEER. THE ENGINEER MAY PERMIT TEMPORARY STORAGE OF THE EXCAVATED MATERIAL IN A LINED AND COVERED ROLL-OFF BOX. THE ENGINEER MAY PERMIT TEMPORARY STORAGE OF THE EXCAVATED MATERIAL ON AN IMPERMEABLE MEMBRANE. THE MEMBRANE SHALL BE SURROUNDED BY BALES OF STRAW TO PREVENT THE SUSPECTED SOILS FROM COMING IN CONTACT WITH THE ORIGINAL SOILS. AN IMPERMEABLE MEMBRANE SHALL BE PLACED OVER THE STOCKPILE TO PREVENT CONTACT WITH PRECIPITATION AND/OR SURFACE RUN-OFF. HE ENGINEER MAY PERMIT THE CONTRACTOR TO DIRECT LOAD THE EXCAVATED CONTAMINATED MATERIAL INTO TRUCKS.

THIS MATERIAL SHALL BE PROPERLY TESTED, TRANSPORTED, AND DISPOSED OF IN A LICENSED (BY THE LOCAL HEALTH DEPARTMENT) AND PERMITTED (BY THE OHIO ENVIRONMENTAL PROTECTION AGENCY) SOLID WASTE FACILITY. IF REQUIRED BY THE SOLID WASTE FACILITY, THE CONTRACTOR SHALL BE RESPONSIBLE FOR CONDUCTING SAMPLING AND ANALYSIS OF THIS MATERIAL. OBTAIN ALL SIGNATURES ON THE MANIFEST FOR TRANSPORTING AND DISPOSAL OF THE MATERIAL AND PROVIDE A FINAL COPY TO THE ENGINEER.

THIS MATERIAL SHALL BE PROPERLY TESTED, TRANSPORTED, AND DISPOSED OF IN A LICENSED (BY THE LOCAL HEALTH DEPARTMENT) AND PERMITTED (BY THE OHIO ENVIRONMENTAL PROTECTION AGENCY) SOLID WASTE FACILITY. IF REQUIRED BY THE SOLID WASTE FACILITY, THE CONTRACTOR SHALL BE RESPONSIBLE FOR CONDUCTING SAMPLING AND ANALYSIS OF THIS MATERIAL. OBTAIN ALL SIGNATURES ON THE MANIFEST FOR TRANSPORTING AND DISPOSAL OF THE MATERIAL AND PROVIDE A FINAL COPY TO THE ENGINEER.

ORPHAN UNDERGROUND STORAGE TANKS

ENVIRONMENTAL STUDIES INDICATE ORPHAN UNDERGROUND STORAGE TANKS (USTS) ARE PRESENT WITHIN THE PROPOSED CONSTRUCTION LIMITS AT THE FOLLOWING LOCATIONS (APPROXIMATE):

KETTERING MEDICAL CENTER AT 600 WEST MAIN (STA. 504 TO STA. 512)
VALVOLINE AT 750 WEST MAIN (STA. 504 TO STA. 506)
ADVANCED AUTO PARTS AT 772 WEST MAIN (STA. 504 TO STA. 506)
PARKING LOT SOUTH OF STA. 520
OFFICES AT 206 WEST MAIN (STA. 523)
TROY/MIAMI HISTORICAL SOCIETY AT 100 WEST MAIN (STA. 526)

THE CONTRACTOR SHALL REMOVE ANY ORPHAN USTS ENCOUNTERED DURING CONSTRUCTION IN ACCORDANCE WITH ODOT CMS 202.08 AND PROVIDE AT LEAST TWO (2) COPIES OF THE CLOSURE REPORT TO THE ENGINEER, ONE FOR SUBMITTAL TO THE BUREAU OF UNDERGROUND STORAGE TANKS REGULATIONS (BUSTR) AND THE SECOND FOR ODOT'S RECORDS.

ALL COSTS AND WORK ASSOCIATED WITH THE COMPLIANCE OF THE AFOREMENTIONED RULES OR REGULATIONS SHALL BE INCLUDED IN THE UNIT PRICE FOR ITEM SPECIAL - REGULATED UNDERGROUND STORAGE TANK REMOVAL. UNDERGROUND STORAGE TANKS AND CONTENTS SHALL BE REMOVED IN THEIR ENTIRETY, AND SHALL BECOME THE PROPERTY OF THE CONTRACTOR AND BE DISPOSED OF BY HIM. IF ANY CONTAMINATED WATER OR SOIL DISPOSAL OR REMEDIATION IS REQUIRED AS A RESULT OF THE UNDERGROUND STORAGE TANK REMOVAL, THEN THESE ITEMS OR WORK SHALL BE HANDLED UNDER OTHER ITEMS IN THE CONTRACT.

CALCULATED ATW CHECKED JCH

GENERAL NOTES

MIA-41-10.32

\\strand.com\projects\CIN\4300-4399\4354\004\Drawings\CAD\110253\roadway\sheets\110253GN004.dgn Sheet 10/1/2021 4:37:54 PM Allisonw

ITEM 614, MAINTAINING TRAFFIC
A MINIMUM OF 1 LANE OF TRAFFIC IN EACH DIRECTION SHALL BE MAINTAINED ON WEST MAIN STREET AT ALL TIMES BY USE OF THE EXISTING PAVEMENT, THE COMPLETED PAVEMENT, AND TEMPORARY SURFACES USING ITEMS 410 AND 614. DETOURS OF SIDE STREETS SHALL BE LIMITED TO THE MINIMUM AMOUNT OF TIME NECESSARY TO COMPLETE THE WORK REQUIRING THE DETOUR.

LENGTH AND DURATION OF LANE CLOSURES AND RESTRICTIONS SHALL BE AT THE APPROVAL OF THE ENGINEER. IT IS THE INTENT TO MINIMIZE THE IMPACT TO THE TRAVELING PUBLIC. LANE CLOSURES OR RESTRICTIONS OVER SEGMENTS OF THE PROJECT IN WHICH NO WORK IS ANTICIPATED WITHIN A REASONABLE TIME FRAME, AS DETERMINED BY THE ENGINEER, SHALL NOT BE PERMITTED. THE LEVEL OF UTILIZATION OF MAINTENANCE OF TRAFFIC DEVICES SHALL BE COMMENSURATE WITH THE WORK IN PROGRESS.

NOTICE OF CLOSURE SIGNS (W20-H13) SHALL BE ERECTED BY THE CONTRACTOR PRIOR TO THE SCHEDULED ROAD CLOSURE OF SIDE ROADS IN ACCORDANCE WITH THE NOTICE OF CLOSURE TIME TABLE BELOW. AT THE APPROVAL OF THE ENGINEER, PORTABLE CHANGEABLE MESSAGE SIGNS MAY BE USED IN LIEU OF THE STANDARD FLATSHEET SIGN FOR CLOSURE DURATIONS OF LESS THAN 1 WEEK.

THE SIGN SHALL DISPLAY THE DATE OF THE CLOSURE IN MMM-DD FORMAT AND THE NUMBER OF DAYS OF THE CLOSURE. THE LAST LINE OF THE W20-H13 SIGN LISTS A PHONE NUMBER WHICH A MOTORIST MAY CALL FOR ADDITIONAL INFORMATION. THIS IS TO BE A SPECIFIC OFFICE WITHIN THE DISTRICT RATHER THAN THE GENERAL SWITCHBOARD NUMBER.

NOTICE OF CLOSURE SIGN TIME TABLE

ITEM	DURATION OF CLOSURE	SIGN DISPLAYED TO PUBLIC
RAMP & ROAD CLOSURES	>= 2 WEEKS	14 CALENDAR DAYS PRIOR TO CLOSURE
	> 12 HOURS & < 2 WEEKS	7 CALENDAR DAYS PRIOR TO CLOSURE
	< 12 HOURS	2 BUSINESS DAYS PRIOR TO CLOSURE

THE SIGNS SHALL BE ERECTED ON THE RIGHT-HAND SIDE OF THE ROAD/RAMP FACING TRAFFIC. THEY SHALL BE PLACED SO AS NOT TO INTERFERE WITH THE VISIBILITY OF ANY OTHER TRAFFIC CONTROL SIGNS. ON ROADWAYS, THEY SHOULD BE ERECTED AT OR NEAR THE POINT OF CLOSURE. THE SIGNS MAY BE ERECTED ANYWHERE ON RAMPS AS LONG AS THEY ARE VISIBLE TO THE MOTORISTS USING THE RAMP. ON ENTRANCE RAMPS, THE SIGN SHALL BE ERECTED WELL IN ADVANCE OF THE MERGE AREA TO AVOID DISTRACTING MOTORISTS.

THE FOLLOWING ESTIMATED QUANTITIES HAVE BEEN INCLUDED IN THE GENERAL SUMMARY FOR USE AS DETERMINED BY THE ENGINEER FOR THE MAINTENANCE OF TRAFFIC.

ITEM 410, TRAFFIC COMPACTED SURFACE, TYPE A OR B
475 CU. YD.
ITEM 410, TRAFFIC COMPACTED SURFACE, TYPE C
425 CU. YD.
ITEM 614, ASPHALT CONCRETE FOR MAINTAINING TRAFFIC
80 CU. YD.
ITEM 616, WATER 20 M. GAL.

ALL WORK AND TRAFFIC CONTROL DEVICES SHALL BE IN ACCORDANCE WITH C&MS 614 AND OTHER APPLICABLE PORTIONS OF THE SPECIFICATIONS, AS WELL AS THE OHIO MANUAL OF UNIFORM TRAFFIC CONTROL DEVICES. PAYMENT FOR ALL LABOR, EQUIPMENT AND MATERIALS SHALL BE INCLUDED IN THE LUMP SUM CONTRACT PRICE FOR ITEM 614, MAINTAINING TRAFFIC, UNLESS SEPARATELY ITEMIZED IN THE PLAN.

TRENCH FOR WIDENING
TRENCH EXCAVATION FOR BASE WIDENING SHALL BE ONLY ON ONE SIDE OF THE PAVEMENT AT A TIME. THE OPEN TRENCH SHALL BE ADEQUATELY MAINTAINED AND PROTECTED WITH DRUMS OR BARRICADES AT ALL TIMES. PLACEMENT OF PROPOSED SUBBASE AND BASE MATERIAL SHALL FOLLOW AS CLOSELY AS POSSIBLE BEHIND EXCAVATION OPERATIONS. THE LENGTH OF WIDENING TRENCH WHICH IS OPEN AT ANY ONE TIME SHALL BE HELD TO A MINIMUM AND SHALL AT ALL TIMES BE SUBJECT TO APPROVAL OF THE ENGINEER.

OVERNIGHT TRENCH CLOSING
THE BASE WIDENING SHALL BE COMPLETED TO A DEPTH OF NO MORE THAN 12 INCHES BELOW THE EXISTING PAVEMENT BY THE END OF EACH WORK DAY EXCEPT WHEN THE DROP OFF LOCATION IS LESS THAN 4 FEET FROM THE TRAVELED LANE, IN WHICH CASE THE DROP OFF SHALL NOT EXCEED 5 INCHES. NO TRENCH SHALL BE LEFT OPEN OVERNIGHT EXCEPT FOR A SHORT LENGTH (25 FEET OR LESS) OF A WORK SECTION AT THE END OF THE TRENCH. IN CASE WORK MUST BE SUSPENDED BECAUSE OF INCLEMENT WEATHER OR OTHER REASONS, THE TRENCH FOR THE UNCOMPLETED BASE WIDENING SHALL BE BACKFILLED AT THE DIRECTION OF THE ENGINEER.

DUST CONTROL
THE CONTRACTOR SHALL FURNISH AND APPLY WATER FOR DUST CONTROL AS DIRECTED BY THE ENGINEER. THE FOLLOWING ESTIMATED QUANTITIES HAVE BEEN INCLUDED FOR DUST CONTROL PURPOSES:

ITEM 616, WATER 30 M. GAL.

WORK ZONE MARKINGS AND SIGNS
THE FOLLOWING ESTIMATED QUANTITIES HAVE BEEN CARRIED TO THE GENERAL SUMMARY FOR USE AT LOCATIONS IDENTIFIED BY THE ENGINEER FOR WORK ZONE PAVEMENT MARKINGS AND SIGNS PER THE REQUIREMENTS OF C&MS 614.04 AND 614.11.

ITEM 614, WORK ZONE LANE LINE, CLASS III, 4", 642 PAINT 1.5 MILE
ITEM 614, WORK ZONE CENTER LINE, CLASS III, 642 PAINT 1.25 MILE
ITEM 614, WORK ZONE EDGE LINE, CLASS III, 4", 642 PAINT 0.25 MILE
ITEM 614, WORK ZONE CHANNELIZING LINE, CLASS III, 8", 642 PAINT 1450 FT
ITEM 614, WORK ZONE TRANSVERSE/DIAGONAL LINE, CLASS III, 642 PAINT 50 FT
ITEM 614, WORK ZONE STOP LINE, CLASS III, 642 PAINT 375 FT
ITEM 614, WORK ZONE CROSSWALK LINE, CLASS III, 642 PAINT 775 FT
ITEM 614, WORK ZONE ARROW, CLASS III, 642 PAINT 50 EACH

MAINTENANCE OF PROPERTY ACCESS
ACCESS TO ALL PROPERTIES WITHIN THE PROJECT LIMITS MUST BE MAINTAINED AT ALL TIMES. IF CERTAIN CONSTRUCTION ACTIVITIES REQUIRE A DRIVEWAY CLOSURE (I.E. CONCRETE CURING), THE CONTRACTOR SHALL PROVIDE ALTERNATE ACCESS TO THE IMPACTED PROPERTY. THE ALTERNATE ACCESS MUST MAINTAIN A MINIMUM 10-FOOT CLEAR WIDTH, A MAXIMUM GRADE OF 10 PERCENT, AND A SURFACE OF COMPACTED ITEM 304 OR BETTER. IT IS THE INTENT TO MINIMIZE THE IMPACT TO PROPERTY OWNERS, SO THE DURATION OF A GIVEN DRIVEWAY CLOSURE SHALL BE LIMITED TO THE TIME WHEN WORK IS ACTIVELY BEING PERFORMED ON THE DRIVEWAY. THE CONTRACTOR SHALL NOTIFY THE ENGINEER OF A PROPOSED DRIVEWAY CLOSURE AND PROVIDE AN ALTERNATE ACCESS PLAN TO THE ENGINEER FOR APPROVAL A MINIMUM OF SEVEN CALENDAR DAYS BEFORE CLOSING THE DRIVEWAY. THE CONTRACTOR WILL NOT BE PERMITTED TO CLOSE PROPERTY ACCESS WITHOUT APPROVAL FROM THE ENGINEER.

THE COST FOR ALL LABOR, EQUIPMENT, AND MATERIALS REQUIRED TO MAINTAIN PROPERTY ACCESS AS DESCRIBED IN THIS NOTE SHALL BE INCLUDED IN THE LUMP SUM BID FOR ITEM 614, MAINTAINING TRAFFIC UNLESS ITEMIZED SEPARATELY IN THE PLANS.

ITEM 614, BUSINESS ENTRANCE (M4-H15) SIGN, AS PER PLAN
THE BUSINESS ENTRANCE (M4-H15) SIGN SHOULD BE PROVIDED AT EACH TEMPORARILY RELOCATED COMMERCIAL DRIVEWAY FOR WHICH THE RELOCATION IS NOT OBVIOUS TO THE MOTORIST. THE PROJECT ENGINEER SHALL DETERMINE WHETHER OR NOT THE DRIVEWAY RELOCATION IS, OR IS NOT, OBVIOUS AND WHETHER OR NOT A SIGN SHOULD BE PROVIDED. ONLY ONE SIGN PER BUSINESS SHALL BE PERMITTED UNLESS OTHERWISE NOTED. THE SIGN SHALL BE 36 INCH X 48 INCH IN SIZE WITH TYPE G OR TYPE H ORANGE RETROREFLECTIVE SHEETING. THE SIGN LEGEND SHALL BE PLACED ON BOTH SIDES OF THE SIGN (BACK TO BACK). THE SIGN SHALL HAVE THE STANDARD M4-H15 LEGEND WITH THE WORD 'BUSINESS' ON THE TOP LINE, EXCEPT UNDER UNUSUAL CIRCUMSTANCES WHERE IT MAY NOT BE INTUITIVE THAT A DRIVEWAY SERVES A SPECIFIC BUSINESS. IN SUCH UNUSUAL CASES, THE ACTUAL BUSINESS NAME MAY BE SUBSTITUTED FOR THE WORD 'BUSINESS'.

THE SIGN SHALL BE MOUNTED ON TWO #3 POSTS OR ON TEMPORARY POSTS IN ACCORDANCE WITH SCD MT-105.10 AND IN ACCORDANCE WITH THE OHIO MANUAL OF UNIFORM TRAFFIC CONTROL DEVICES, LATEST EDITION. THE SIGN SHALL BE CLEARLY VISIBLE AND SHALL CLEARLY IDENTIFY THE LOCATION OF THE DRIVEWAY. THE SIGN SHOULD BE POSITIONED AT 90° TO THE DIRECTION(S) OF TRAFFIC. THE SIGN MAY NEED TO BE MOVED FOR EACH PHASE OF THE MAINTENANCE OF TRAFFIC OPERATIONS.

PAYMENT FOR ALL COSTS ASSOCIATED WITH MANUFACTURING, MOUNTING, RELOCATING, AND REMOVING THE SIGN, INCLUDING ALL LABOR, MATERIALS AND EQUIPMENT SHALL BE INCLUDED IN THE CONTRACT PRICE PER EACH FOR ITEM 614-BUSINESS ENTRANCE SIGN.

THE FOLLOWING ESTIMATED QUANTITY HAS BEEN CARRIED TO THE GENERAL SUMMARY FOR THIS ITEM.

ITEM 614, BUSINESS ENTRANCE SIGN 15 EACH

ITEM 614, LAW ENFORCEMENT OFFICER (WITH PATROL CAR) FOR ASSISTANCE DURING CONSTRUCTION OPERATIONS
USE OF LAW ENFORCEMENT OFFICERS (LEOS) BY CONTRACTORS OTHER THAN THE USES SPECIFIED BELOW WILL NOT BE PERMITTED AT PROJECT COST. LEOS SHOULD NOT BE USED WHERE THE OMUTCD INTENDS THAT FLAGGERS BE USED.

IN ADDITION TO THE REQUIREMENTS OF C&MS 614 AND THE OMUTCD, A UNIFORMED LEO WITH AN OFFICIAL PATROL CAR (CAR WITH TOP-MOUNTED EMERGENCY FLASHING LIGHTS AND COMPLETE MARKINGS OF THE APPROPRIATE LAW ENFORCEMENT AGENCY) SHOULD BE PROVIDED FOR THE FOLLOWING TRAFFIC CONTROL TASKS AS APPROVED BY THE ENGINEER:

- FOR LANE CLOSURES: DURING INITIAL SET-UP PERIODS, TEAR DOWN PERIODS, SUBSTANTIAL SHIFTS OF A CLOSURE POINT OR WHEN NEW LANE CLOSURE ARRANGEMENTS ARE INITIATED FOR LONG-TERM LANE CLOSURES/SHIFTS (FOR THE FIRST AND LAST DAY OF MAJOR CHANGES IN TRAFFIC CONTROL SETUP).

IN GENERAL, LEOS SHOULD BE POSITIONED IN ADVANCE OF AND ON THE SAME SIDE AS THE LANE RESTRICTION OR AT THE POINT OF ROAD CLOSURE, AND TO MANUALLY CONTROL TRAFFIC MOVEMENTS THROUGH SIGNALIZED INTERSECTIONS IN WORK ZONES.

LEOS SHOULD NOT FORGO THEIR TRAFFIC CONTROL RESPONSIBILITIES TO APPREHEND MOTORISTS FOR ROUTINE TRAFFIC VIOLATIONS. HOWEVER, IF A MOTORIST'S ACTIONS ARE CONSIDERED TO BE RECKLESS, THEN PURSUIT OF THE MOTORIST IS APPROPRIATE.

THE LEOS WORK AT THE DIRECTION OF THE CONTRACTOR. THE CONTRACTOR IS RESPONSIBLE FOR SECURING THE SERVICES OF THE LEOS WITH THE APPROPRIATE AGENCIES AND COMMUNICATING THE INTENTIONS OF THE PLANS WITH RESPECT TO DUTIES OF THE LEOS. THE ENGINEER SHALL HAVE FINAL CONTROL OVER THE LEOS' DUTIES AND PLACEMENT, AND WILL RESOLVE ANY ISSUES THAT MAY ARISE BETWEEN THE TWO PARTIES.

ENSURE PROVIDED LEOS HAVE BEEN TRAINED APPROPRIATE TO THE JOB DECISIONS THEY ARE REQUIRED TO MAKE WHILE ON THE PROJECT, IN ACCORDANCE WITH C&MS 614.03.

THE LEO SHALL REPORT IN TO THE CONTRACTOR PRIOR TO THE START OF THE SHIFT, IN ORDER TO RECEIVE INSTRUCTIONS REGARDING SPECIFIC WORK ASSIGNMENTS DURING HIS/HER SHIFT. THE LEO IS EXPECTED TO STAY AT THE PROJECT SITE FOR THE ENTIRE DURATION OF HIS/HER SHIFT. THE LEO SHALL REPORT TO THE CONTRACTOR AT THE END OF HIS/HER SHIFT. SHOULD IT BE NECESSARY TO LEAVE THE PROJECT SITE, THE LEO SHALL NOTIFY THE ENGINEER. THE CONTRACTOR SHALL PROVIDE THE LEO WITH A TWO-WAY COMMUNICATION DEVICE THAT SHALL BE RETURNED TO THE CONTRACTOR AT THE END OF HIS/HER SHIFT.

LEOS (WITH PATROL CAR) REQUIRED BY THE TRAFFIC MAINTENANCE TASKS ABOVE SHALL BE PAID FOR ON A UNIT PRICE (HOURLY) BASIS UNDER ITEM 614, LAW ENFORCEMENT OFFICER (WITH PATROL CAR) FOR ASSISTANCE. THE FOLLOWING ESTIMATED QUANTITIES HAVE BEEN CARRIED TO THE GENERAL SUMMARY.

ITEM 614, LAW ENFORCEMENT OFFICER WITH PATROL CAR FOR ASSISTANCE 60 HOURS

THE HOURS PAID SHALL INCLUDE ANY MINIMUM SHOW-UP TIME REQUIRED BY THE LAW ENFORCEMENT AGENCY INVOLVED.

ANY ADDITIONAL COSTS (ADMINISTRATIVE OR OTHERWISE) INCURRED BY THE CONTRACTOR TO OBTAIN THE SERVICES OF AN LEO ARE INCLUDED WITH THE BID UNIT PRICE FOR ITEM 614, LAW ENFORCEMENT OFFICER WITH PATROL CAR FOR ASSISTANCE.

NOTIFICATION OF TRAFFIC RESTRICTIONS
THROUGHOUT THE DURATION OF THE PROJECT, THE CONTRACTOR SHALL NOTIFY THE PROJECT ENGINEER IN WRITING OF ALL TRAFFIC RESTRICTIONS AND UPCOMING MAINTENANCE OF TRAFFIC CHANGES. THE CONTRACTOR SHALL ENSURE THE WRITTEN NOTIFICATION IS SUBMITTED IN A TIMELY MANNER TO ALLOW THE PROJECT ENGINEER TO MEET THE REQUIRED TIME FRAMES SET FORTH IN THE TABLE BELOW TO INFORM THE SPECIAL HAULING PERMITS SECTION (HAULING.PERMITS@DOT.OHIO.GOV) AND THE DISTRICT PUBLIC INFORMATION OFFICE (PIO). THIS NOTIFICATION SHALL BE RECEIVED BY THE PROJECT ENGINEER PRIOR TO THE PHYSICAL SETUP OF ANY APPLICABLE SIGNS OR MESSAGE BOARDS.

INFORMATION SHOULD INCLUDE, BUT IS NOT LIMITED TO, ALL CONSTRUCTION ACTIVITIES THAT IMPACT OR INTERFERE WITH TRAFFIC AND SHALL LIST THE SPECIFIC LOCATION, TYPE OF WORK, ROAD STATUS, DATE AND TIME OF RESTRICTION, DURATION OF RESTRICTION, NUMBER OF LANES MAINTAINED, NUMBER OF LANES CLOSED, MINIMUM VERTICAL CLEARANCE, MINIMUM WIDTH OF DRIVABLE PAVEMENT, DETOUR ROUTES, IF APPLICABLE, AND ANY OTHER INFORMATION REQUESTED BY THE PROJECT ENGINEER.

NOTIFICATION OF TRAFFIC RESTRICTIONS

ITEM	DURATION OF CLOSURE	SIGN DISPLAYED TO PUBLIC
RAMP & ROAD CLOSURES	>= 2 WEEKS	21 CALENDAR DAYS PRIOR TO CLOSURE
	> 12 HOURS & < 2 WEEKS	14 CALENDAR DAYS PRIOR TO CLOSURE
	<= 12 HOURS	4 BUSINESS DAYS PRIOR TO CLOSURE
LANE CLOSURES & RESTRICTIONS	>= 2 WEEKS	14 CALENDAR DAYS PRIOR TO CLOSURE
	< 2 WEEKS	5 BUSINESS DAYS PRIOR TO CLOSURE
START OF CONSTRUCTION & TRAFFIC PATTERN CHANGES	N/A	14 CALENDAR DAYS PRIOR TO IMPLEMENTATION

ANY UNFORESEEN CONDITIONS NOT SPECIFIED IN THE PLANS REQUIRING TRAFFIC RESTRICTIONS SHALL ALSO BE REPORTED TO THE PROJECT ENGINEER USING THE NOTIFICATION TIME TABLE.

CALCULATED LDW CHECKED JWB

MAINTENANCE OF TRAFFIC NOTES

MIA-41-10.32

L:\Troy\OH\19060901-00_WestMainCorridorImprov.\110253\MOT\Sheets\110253MN101.dgn 10/1/2021 8:09:10 AM jbarbour

RECOMMENDED CONSTRUCTION PHASING

PRE-PHASE (NOT SHOWN): CLOSE INSIDE WESTBOUND LANE WITH DRUMS IN ADVANCE OF RIDGE AVENUE INTERSECTION IN ACCORDANCE WITH MT-95.32. CLOSE TWO-WAY LEFT TURN LANE WITH DRUMS BETWEEN TAMPLIN DRIVE AND RIDGE AVENUE IN ACCORDANCE WITH MT-95.60. CONSTRUCT NEW STORM SEWER FROM STA 480+20 ± TO STA 481+80 ±. STUB OUT PIPES TO PROPOSED CATCH BASINS. REMOVE LANE CLOSURES. COMPLETE CONNECTIONS TO NEW CATCH BASINS UTILIZING LANE CLOSURES AND/OR FLAGGERS IN ACCORDANCE WITH THE STANDARD DRAWINGS. CLOSE WESTBOUND CURB LANE WITH DRUMS FROM NORWICH ROAD TO RIDGE AVENUE IN ACCORDANCE WITH MT-95.31. CONVERT CENTER TWO WAY LEFT TURN LANE TO WESTBOUND THROUGH LANE FROM APPROXIMATELY STA 475+00 TO RIDGE AVENUE IN ACCRODANCE WITH MT-95.61. CONSTRUCT STORM SEWER FROM STA 462+90± TO STA 481+80±. CLOSE ONLY THE LENGTH OF LANE NEEDED TO COMPLETE THE WORK EACH DAY. ADJUST THE LIMITS OF THE LANE CLOSURES AS NECESSARY IN ACCORDANCE WITH THE STANDARD DRAWINGS. REMOVE DRUMS AT THE END OF EACH WORKDAY. COMPLETE CONNECTIONS TO NEW CATCH BASINS UTILIZING LANE CLOSURES AND/OR FLAGGERS IN ACCORDANCE WITH THE STANDARD DRAWINGS. REMOVE LANE CLOSURES. CONSTRUCT TEMPORARY SIGNAL POLES FOR MAINTAINING TRAFFIC SIGNALS AT DORSET ROAD AND ATTACH SIGNALS TO THE TEMPORARY POLES.

PHASE 1: REMOVE CONFLICTING PAVEMENT MARKINGS WITHIN THE PAVEMENT PLANING LIMITS. PLACE TEMPORARY PAVEMENT MARKINGS AND SIGNAGE PER PHASE 1 MOT PLANS. COVER OR REMOVE ALL CONFLICTING PAVEMENT MARKINGS AND/OR SIGNAGE. PROVIDE ONE WESTBOUND LANE, TWO EASTBOUND LANES AND ONE TWO-WAY-LEFT-TURN LANE. ADJUST SIGNAL HEADS AS NEEDED TO ACCOMMODATE REVISED LANE LOCATIONS. WHERE ALTERNATE DRIVEWAY ACCESS IS SPECIFIED (I.E. PROVIDED VIA A SIDE STREET), INSTALL BUSINESS ENTRANCE SIGNAGE IN ADVANCE OF TEMPORARY DRIVEWAY CLOSURES. MAINTAIN DRIVEWAY ACCESS WHERE SHOWN USING EXISTING PAVEMENT AND TRAFFIC COMPACTED SURFACE. PROVIDE PEDESTRIAN DETOURS PER SCD MT-110.10. SIDEWALK WORK SHALL BE STAGED SO THAT ONLY ONE BLOCK IS UNDER CONSTRUCTION AT ANY GIVEN TIME. CONSTRUCT BASE WIDENING, CURB, DRAINAGE STRUCTURES, DRIVEWAYS, SIDEWALK, AND CONCRETE PAVEMENT BASE ON THE SOUTH SIDE OF THE ROAD. BUILD THE COMPLETE SIGNAL AT DORSETT. RESTORE FULL DRIVEWAY ACCESS ON THE SOUTH SIDE OF MAIN STREET, REMOVE PCB/DRUMS AND REMOVE BUSINESS ENTRANCE SIGNAGE.

PHASE 1A (NOT SHOWN): DIRECT NORTHBOUND PRIVATE ROAD TRAFFIC TO USE HAWORTH COURT AND WESTON ROAD. CONSTRUCT TRAFFIC ISLAND AT STA 444+00 RT. REOPEN TO NORTHBOUND TRAFFIC UPON COMPLETION OF THE ISLAND.

PRE-PHASE 2: PLACE TEMPORARY PAVEMENT MARKINGS AND SIGNAGE PER PHASE 2 MOT PLANS. COVER OR REMOVE ALL CONFLICTING PAVEMENT MARKINGS AND/OR SIGNAGE. PROVIDE ONE WESTBOUND LANE, TWO EASTBOUND LANES AND ONE TWO-WAY-LEFT-TURN LANE. PLACE NEW SIGNAL AT DORSETT INTO SERVICE. ADJUST ALL SIGNAL HEADS AS NEEDED TO ACCOMMODATE REVISED LANE LOCATIONS. WHERE ALTERNATE DRIVEWAY ACCESS IS SPECIFIED (I.E. PROVIDED VIA A SIDE STREET), INSTALL BUSINESS ENTRANCE SIGNAGE IN ADVANCE OF TEMPORARY DRIVEWAY CLOSURES. MAINTAIN DRIVEWAY ACCESS WHERE SHOWN USING EXISTING PAVEMENT AND TRAFFIC COMPACTED SURFACE.

CLOSE WESTBOUND TRAVEL LANE ON MAIN STREET AND SHIFT WESTBOUND TRAFFIC TO CENTER LANE (LEFT-TURN LANE/TWO-WAY LEFT TURN LANE) UTILIZING DRUMS IN ACCORDANCE WITH MT-95.61. CONSTRUCT THE WATER MAIN AND SERVICES. WESTBOUND TRAFFIC SHALL ONLY BE DIVERTED DURING WORK HOURS AND RESTORED TO PHASE 2 TRAFFIC PLAN DURING NON-WORKING HOURS. ALL OPEN TRENCHES SHALL BE BACKFILLED TO TOP OF EXISTING PAVEMENT SURFACE AT THE COMPLETION OF EACH WORK DAY. AT THE APPROVAL OF THE ENGINEER, A SHORT DISTANCE AT THE END OF THE TRENCH MAY BE COVERED BY A TRAFFIC RATED METAL PLATE DURING NON-WORKING HOURS.

UPON COMPLETION OF WATER MAIN WORK, CLOSE TWO-WAY LEFT TURN/LEFT TURN ONLY LANE AND INSIDE WESTBOUND LANE WITH DRUMS (NOT SHOWN) AS NEEDED (IN ACCORDANCE WITH MT-95.32 AND MT-95.60) TO CONSTRUCT THE CONCRETE MEDIANS. DIRECT NORTHBOUND WESTON ROAD TRAFFIC DESTINED TO WESTBOUND MAIN STREET TO USE HENLY ROAD/DORSET ROAD. REMOVE LANE CLOSURES UPON COMPLETION OF MEDIANS.

PHASE 2: PROVIDE PEDESTRIAN DETOURS PER SCD MT-110.10. SIDEWALK WORK SHALL BE STAGED SO THAT ONLY ONE BLOCK IS UNDER CONSTRUCTION AT ANY GIVEN TIME. CONSTRUCT BASE WIDENING, CURB, DRAINAGE STRUCTURES, DRIVEWAYS, SIDEWALK AND CONCRETE PAVEMENT BASE ON THE NORTH SIDE OF THE ROAD. RESTORE FULL DRIVEWAY ACCESS ON THE NORTH SIDE OF MAIN STREET, REMOVE DRUMS AND REMOVE BUSINESS ENTRANCE SIGNAGE.

PHASE 2A (NOT SHOWN): CLOSE COVENT ROAD TO TRAFFIC AT THE INTERSECTION WITH WESTON ROAD. DIRECT TRAFFIC TO USE WESTON ROAD, SUSSEX ROAD AND DORSET ROAD. CONSTRUCT SIDEWALK BUMP OUT AT THE INTERSECTION. REOPEN COVENT ROAD TO TRAFFIC.

PHASE 3 (NOT SHOWN): COMPLETE MILLING AND PLACE ASPHALT INTERMEDIATE COURSE, ASPHALT SURFACE COURSE AND PERMANENT PAVEMENT MARKINGS. MAINTAIN TRAFFIC PER SCDS MT-95.31, MT-95.32, MT-99.20 AND/OR FLAGGERS. INSTALL PERMANENT SIGNAGE. ACTIVATE NEW SIGNALS PER MT-120.00. REMOVE ALL TEMPORARY SIGNAL POLES, MOT SIGNAGE AND UNCOVER ALL SIGNS TO REMAIN.

CALCULATED LDW
CHECKED JWB

MAINTENANCE OF TRAFFIC NOTES

MIA-41-10.32

L:\TroyOH\19060901-00_WestMainCorridorImprov\110253\MOT\Sheets\110253MN101.dgn 10/1/2021 8:09:11 AM jbarbour

SHEET NO.	PHASE	614 WORK ZONE LANE LINE, CLASS I, 4", 642 PAINT	614 WORK ZONE LANE LINE, CLASS I, 4", 740.06, TYPE I	614 WORK ZONE CENTER LINE, CLASS I, 642 PAINT	614 WORK ZONE CENTER LINE, CLASS I, 740.06, TYPE I	614 WORK ZONE EDGE LINE, CLASS I, 4", 642 PAINT	614 WORK ZONE EDGE LINE, CLASS I, 4", 740.06, TYPE I	614 WORK ZONE CHANNELIZING LINE, CLASS I, 8", 642 PAINT	614 WORK ZONE CHANNELIZING LINE, CLASS I, 8", 740.06, TYPE I	614 WORK ZONE DOTTED LINE, CLASS I, 4", 740.06, TYPE I	614 WORK ZONE TRANSVERSE/DIAGONAL LINE, CLASS I, 642 PAINT	614 WORK ZONE STOP LINE, CLASS I, 642 PAINT	614 WORK ZONE STOP LINE, CLASS I, 740.06, TYPE I	614 WORK ZONE CROSSWALK LINE, CLASS I, 642 PAINT	614 WORK ZONE ARROW, CLASS I, 642 PAINT	614 WORK ZONE ARROW, CLASS I, 740.06, TYPE I	614 WORK ZONE ISLAND MARKING, CLASS I	615 PAVEMENT FOR MAINTAINING TRAFFIC, CLASS A	615 ROADS FOR MAINTAINING TRAFFIC			
		MILE	MILE	MILE	MILE	MILE	MILE	FT	FT	FT	FT	FT	FT	FT	EACH	EACH	SF	SF	LUMP			
16	1	0.09	0.09	0.18	0.08	0.09	0.09	36	110						5		54	157				
17	1	0.19		0.25		0.19		357				11			6							
18	1	0.19		0.38		0.19									14							
19	1	0.19		0.38		0.19									6							
20	1	0.09	0.03	0.17	0.08	0.09	0.03		597	122			12		6	2						
21										175												
22	2	0.12	0.04	0.16	0.04	0.09		100						106	5							
23	2	0.19		0.22		0.25		1146			42	161		509	20							
24	2	0.19		0.38		0.19						67		80	12							
25	2	0.19		0.38		0.19									6							
26	2	0.09	0.03	0.17	0.04	0.09	0.03		117			12			4	5						
TOTALS CARRIED TO GENERAL SUMMARY		1.53	0.19	2.67	0.24	1.56	0.15	1639	824	297	42	251	12	695	84	7	54	157	LUMP			

CALCULATED AAA
CHECKED JWB

SUMMARY OF TRAFFIC MAINTENANCE

MIA-41-10.32

13
194

L:\Troy\OH\19060901-00_WestMainCorridorImprov\110253\MOT\Sheets\110253MS001.dgn 10/1/2021 8:09:12 AM jbarbour

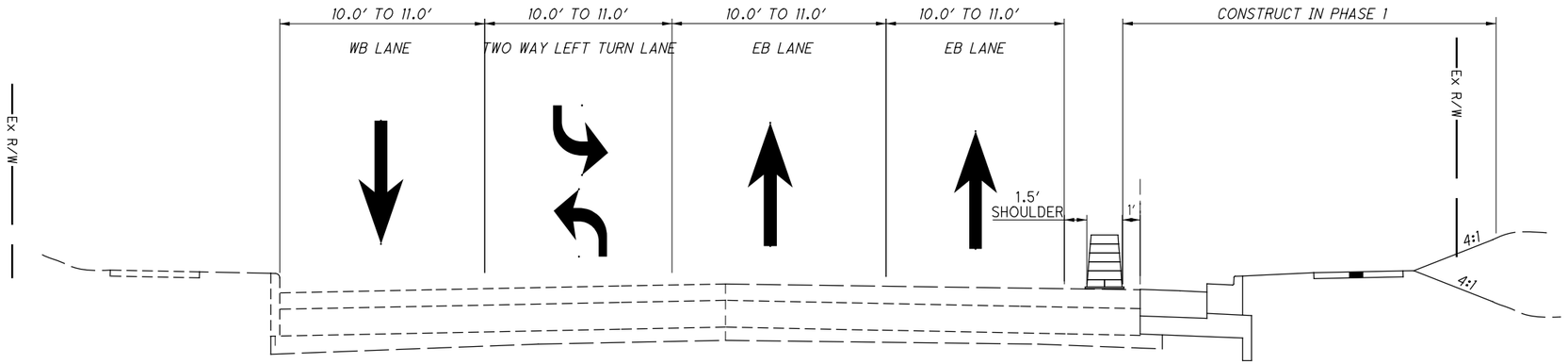

MAINTENANCE OF TRAFFIC TYPICAL SECTION PHASE 1

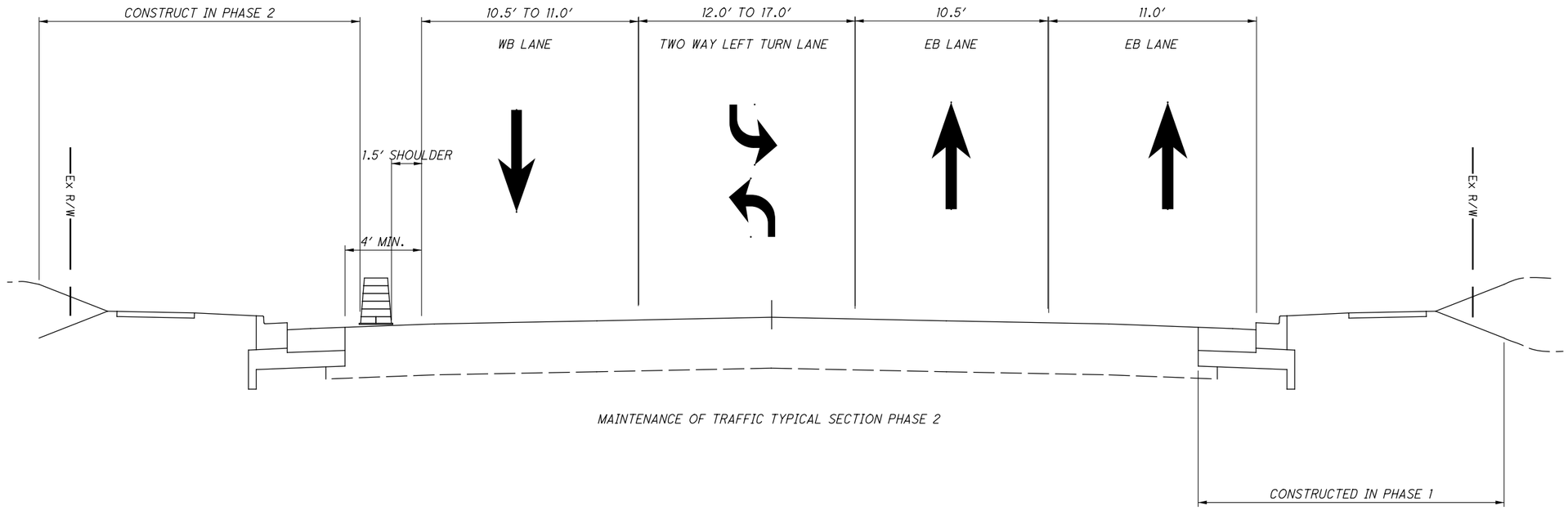

MAINTENANCE OF TRAFFIC TYPICAL SECTION PHASE 2

CALCULATED LDW
CHECKED JWB

MAINTENANCE OF TRAFFIC TYPICAL SECTIONS

MIA-41-10.32

L:\TroyOH\19060901-00_WestMainCorridorImprov\110253\MOT\Sheets\110253MY101.dgn 10/1/2021 8:09:12 AM jbarbour

A

ROAD WORK AHEAD

W20-1-36

B

END ROAD WORK

G20-2-36

C

TYPE "B" (TYP.)

ROAD CLOSED TO THRU TRAFFIC

R11-4-60

M4-10(L-R)-48

DETOUR

TYPE III BARRICADE

D

TYPE "B" (TYP.)

ROAD CLOSED

R11-2-48

TYPE III BARRICADE

(PLACE IN WB LANE
EB LANE TO REMAIN OPEN)

NOTE:
CLOSURE(S) OF SIDE STREETS SHALL BE LIMITED ONLY TO THE TIME WHERE ACTIVE CONSTRUCTION IS OCCURRING ON THE SIDE STREET. COORDINATE ALL CLOSURES IN ADVANCE WITH THE CITY. PROVIDE SIGNAGE FOR SIDE STREET DETOUR PER OMUTCD.

HORIZONTAL SCALE IN FEET

0 10 20 40

CALCULATED LDW

CHECKED JWB

MAINTENANCE OF TRAFFIC SIGN SCHEMATIC

MIA-41-09.49

L:\TroyOH\19060901-00_WestMainCorridorImprov\110253\MOT\Sheets\110253MT100.dgn 10/1/2021 8:09:13 AM jbarbour

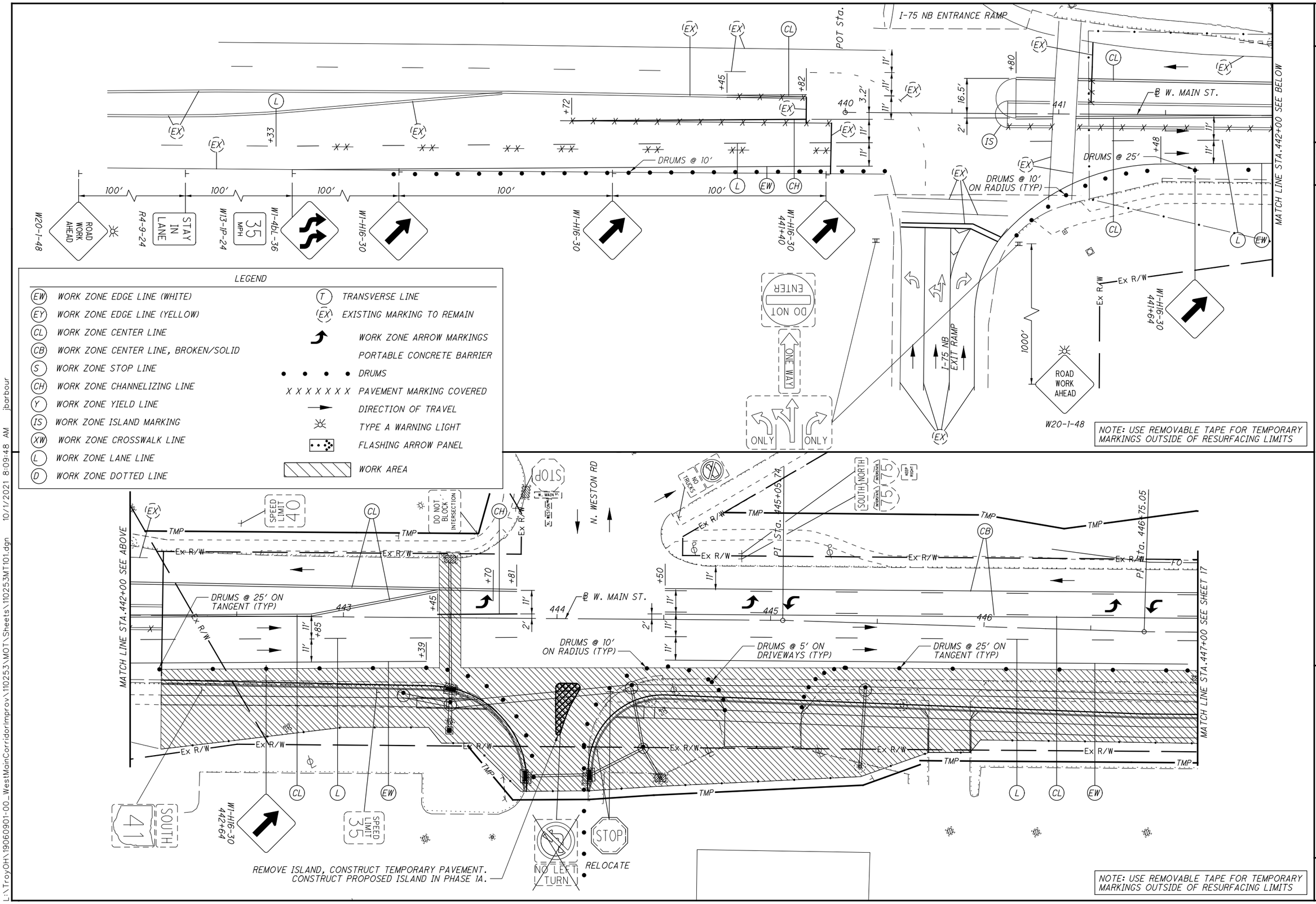

HORIZONTAL SCALE IN FEET 0 10 20 40

CALCULATED DJB
CHECKED JWB

MAINTENANCE OF TRAFFIC PHASE 1

MIA-41-10.32

L:\TroyOH\19060901-00_WestMainCorridorImprov\110253\MOT\Sheets\110253MT101.dgn 10/1/2021 8:09:48 AM jbarbour

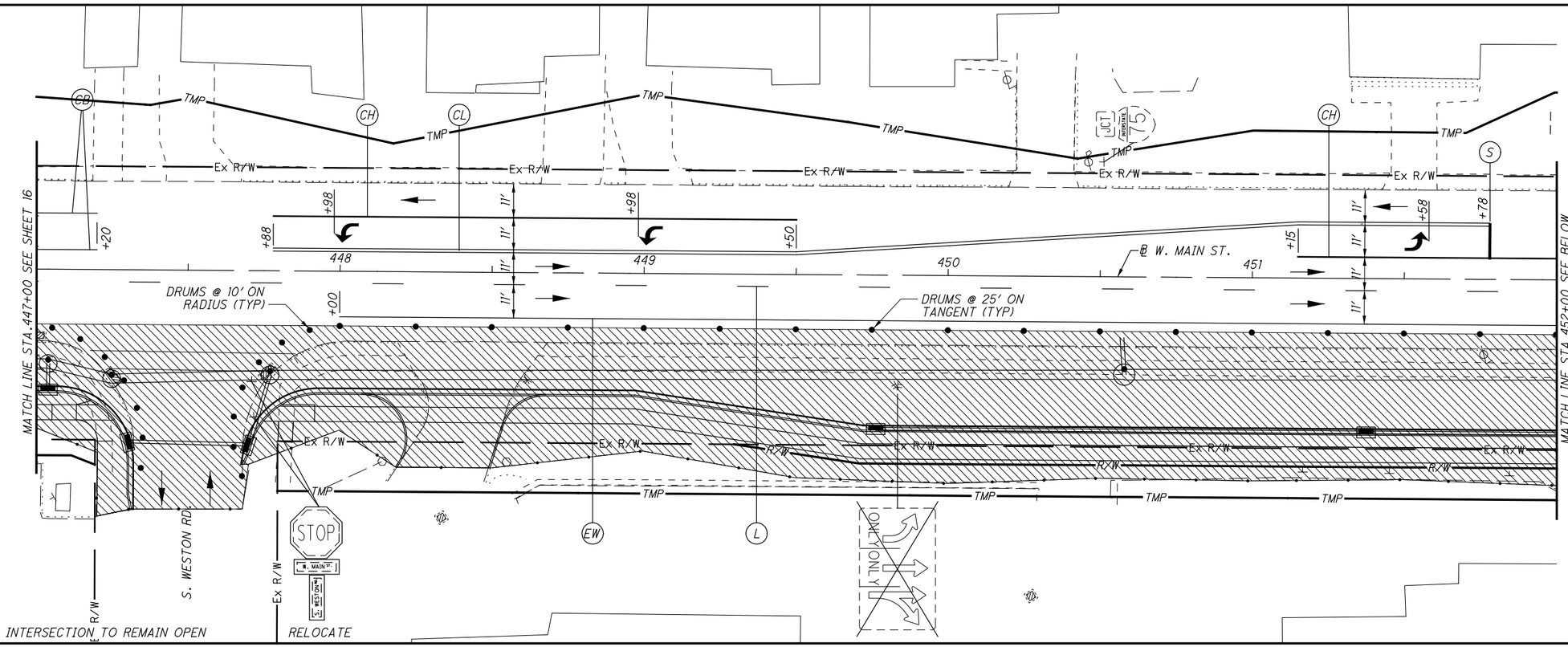

HORIZONTAL SCALE IN FEET
0 10 20 40

CALCULATED DJB
CHECKED JWB

MAINTENANCE OF TRAFFIC PHASE 1

MIA-41-10.32

17
194

L:\Troy\OH\19060901-00_WestMainCorridorImprov\110253\MOT\Sheets\110253MT102.dgn 10/1/2021 8:10:13 AM jbarbour

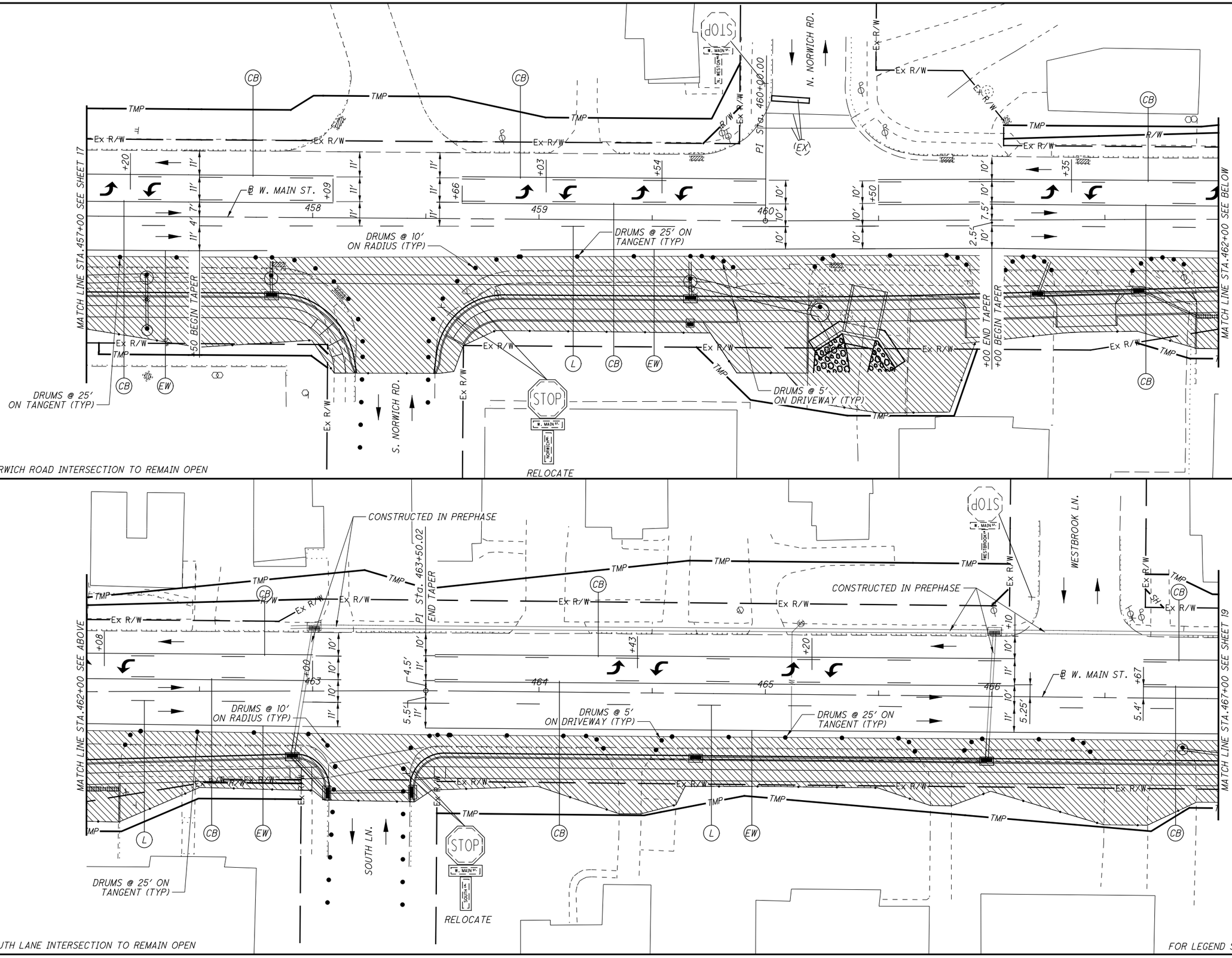

HORIZONTAL SCALE IN FEET
0 10 20 40

CALCULATED DJB
CHECKED JWB

MAINTENANCE OF TRAFFIC
PHASE 1

MIA-41-10.32

18
194

L:\Troy\OH\19060901-00_WestMainCorridorImprov\110253\MOT\Sheets\110253MT103.dgn 10/1/2021 8:10:36 AM jbarbour

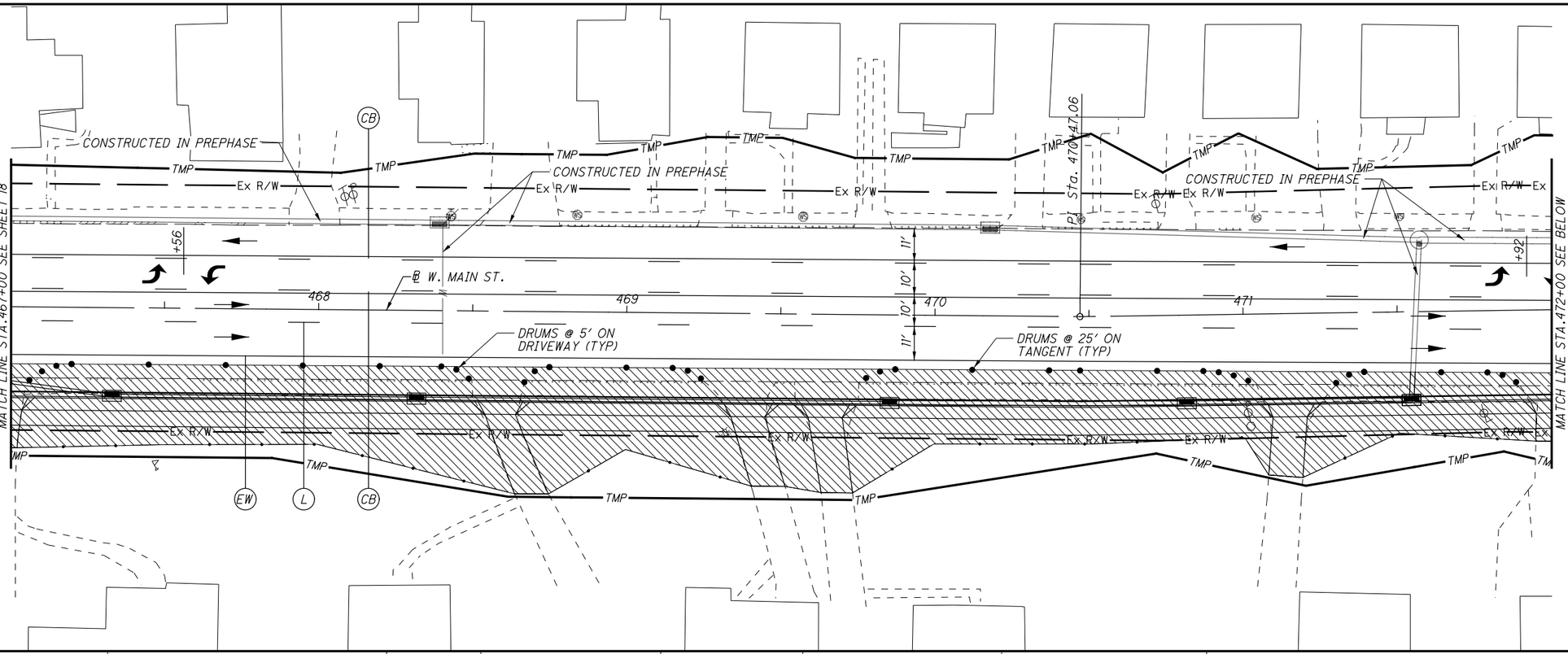

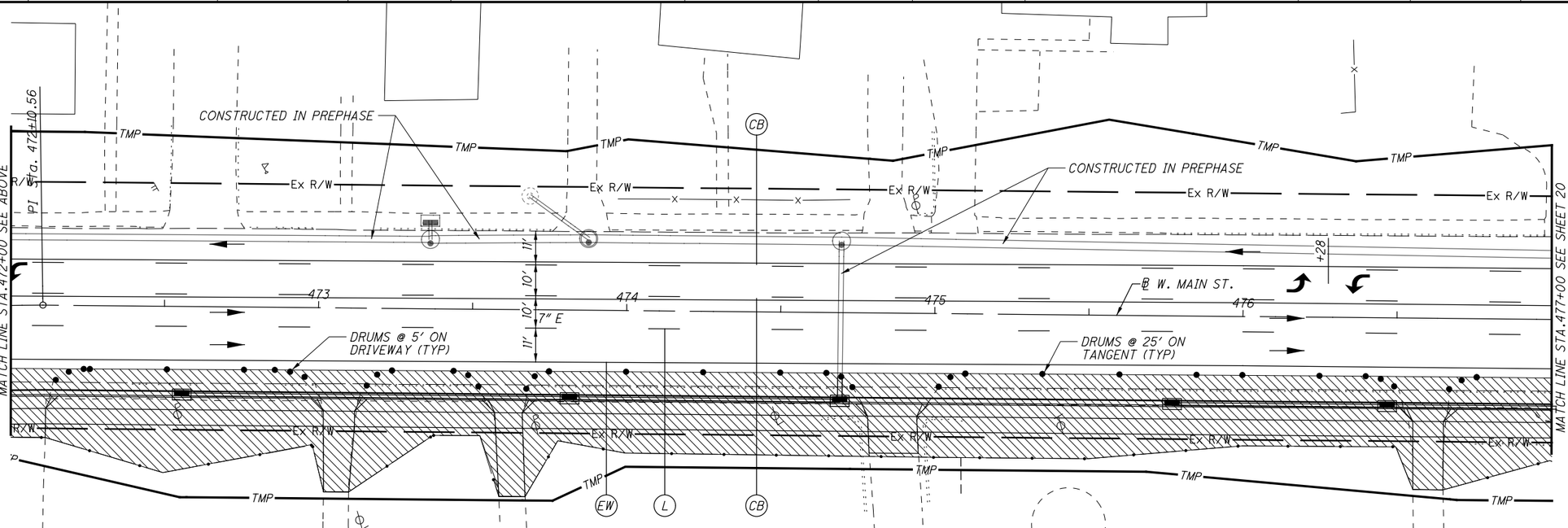

FOR LEGEND SEE SHEET 16

HORIZONTAL SCALE IN FEET
0 10 20 40

CALCULATED DJB
CHECKED JWB

MAINTENANCE OF TRAFFIC
PHASE 1

MIA-41-10.32

19
194

L:\Troy\OH\19060901-00_WestMainCorridorImprov.\110253\MOT\Sheets\110253MT104.dgn 10/1/2021 8:10:59 AM jbarbour

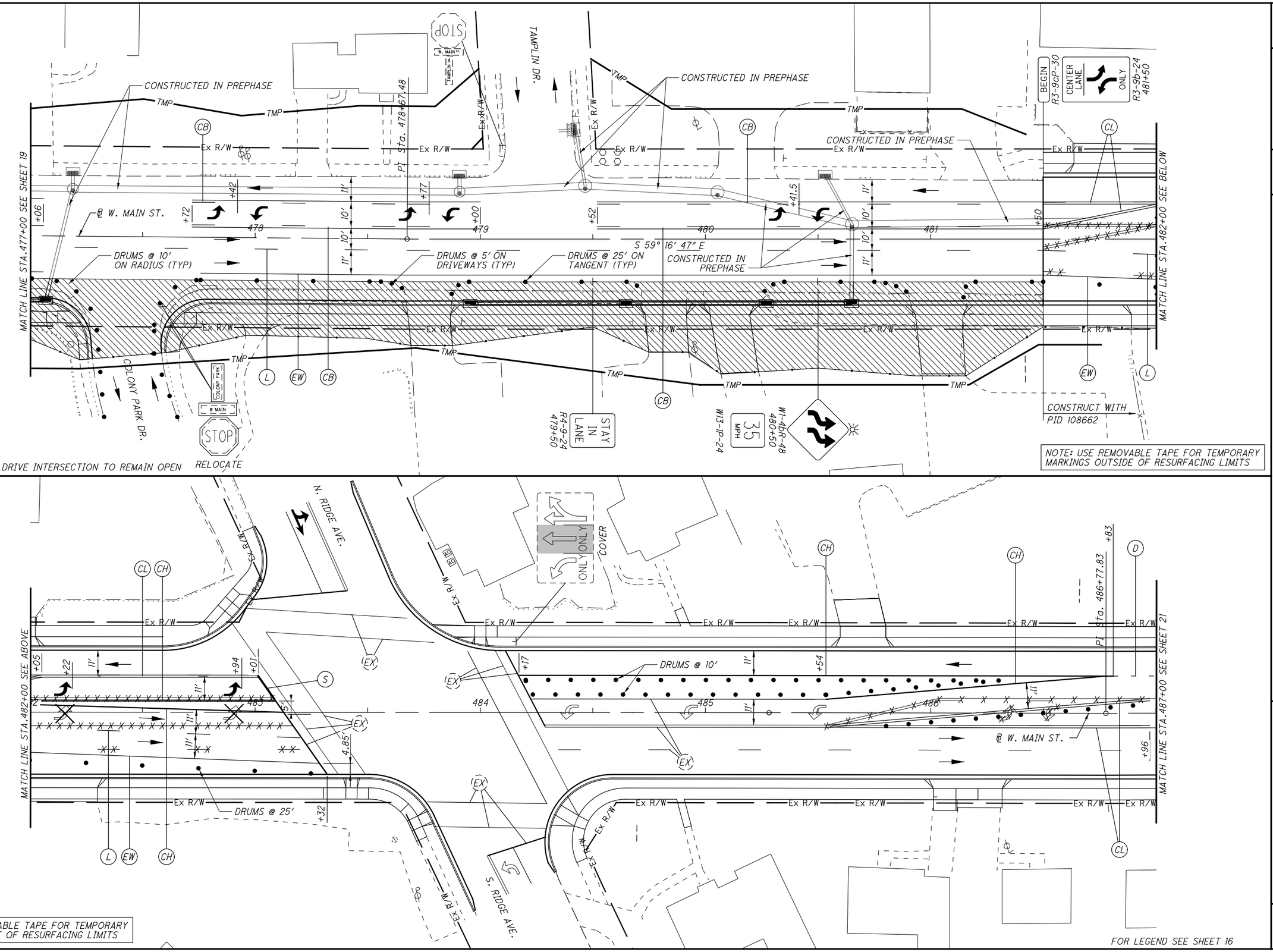

HORIZONTAL SCALE IN FEET 0 10 20 40

CALCULATED DJB
CHECKED JWB

MAINTENANCE OF TRAFFIC PHASE 1

MIA-41-10.32

L:\TroyOH\19060901-00_WestMainCorridorImprov\110253\MOT\Sheets\110253MT105.dgn 10/1/2021 8:11:22 AM jbarbour

NOTE: ALL PAVEMENT MARKINGS SHOWN ON THIS SHEET ARE EXISTING

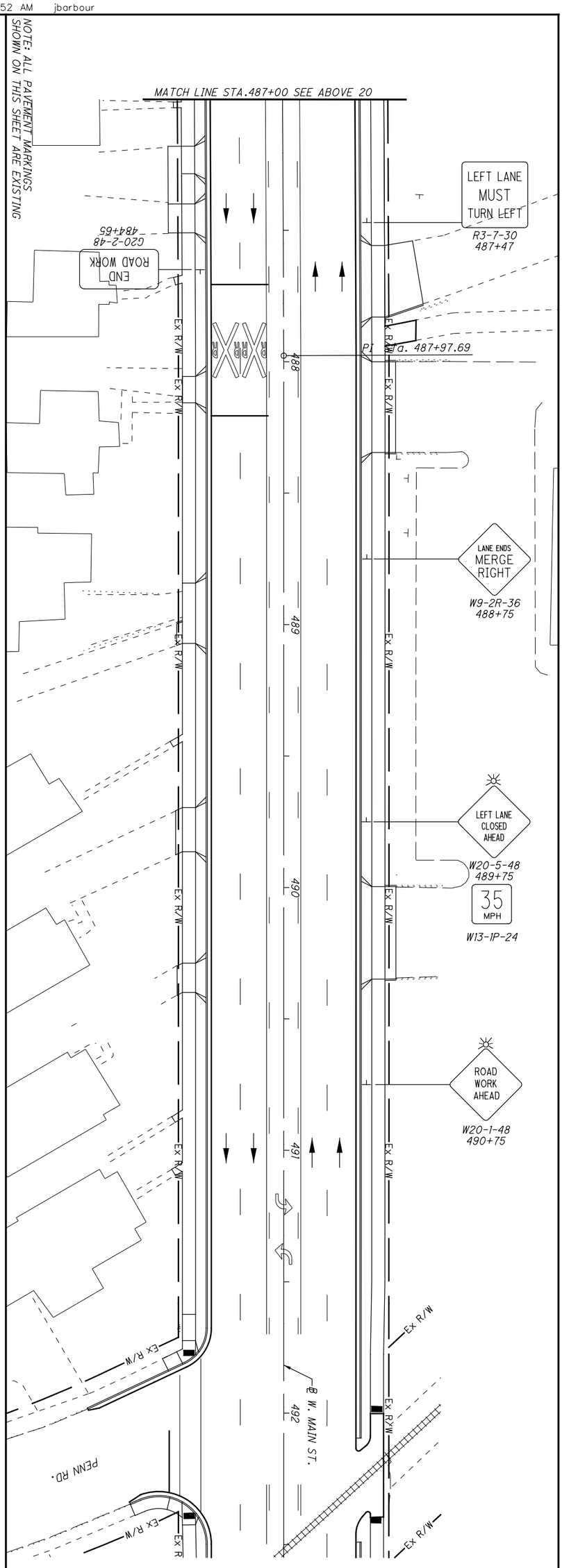

FOR LEGEND SEE SHEET 16

21 / 194	MIA-41-10.32	MAINTENANCE OF TRAFFIC PHASE 1	CALCULATED DJB / CHECKED JWB	0 10 20 40 HORIZONTAL SCALE IN FEET

MAINTENANCE OF TRAFFIC PHASE 2

MIA-41-10.32

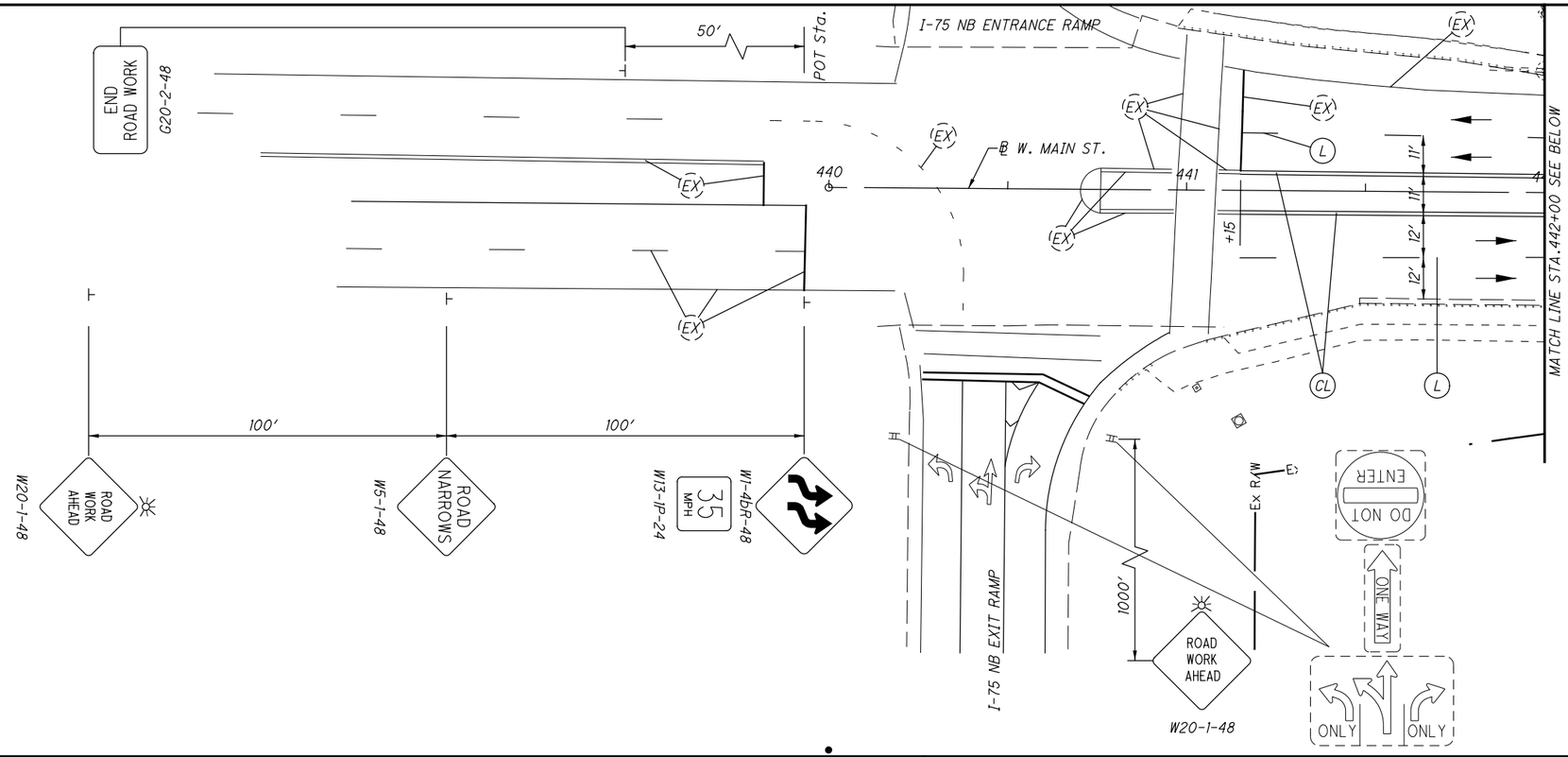

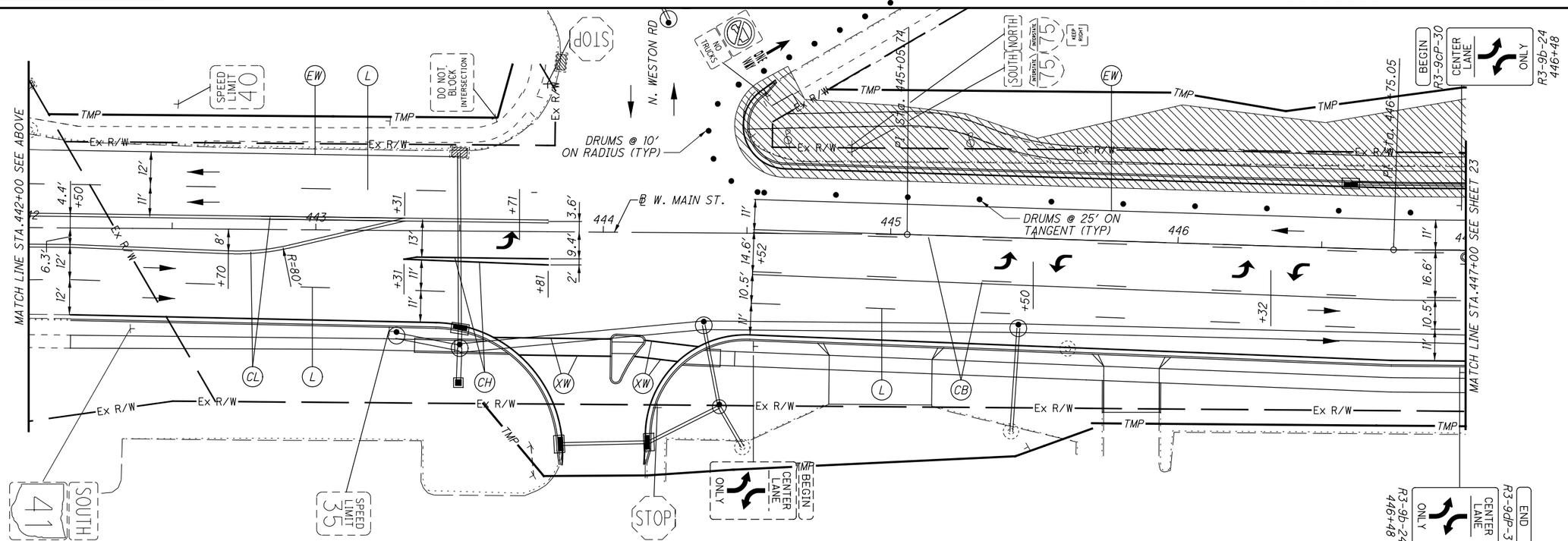

FOR LEGEND SEE SHEET 16

HORIZONTAL SCALE IN FEET
0 25 50 100

CALCULATED DJB
CHECKED JWB

L:\Troy\OH\19060901-00_WestMainCorridorImprov\110253\MOT\Sheets\110253MT107.dgn 10/1/2021 8:12:06 AM jbarbour

L:\TroyOH\19060901-00_WestMainCorridorImprov\110253\MOT\Sheets\110253MT108.dgn 10/1/2021 8:12:22 AM jbarbour

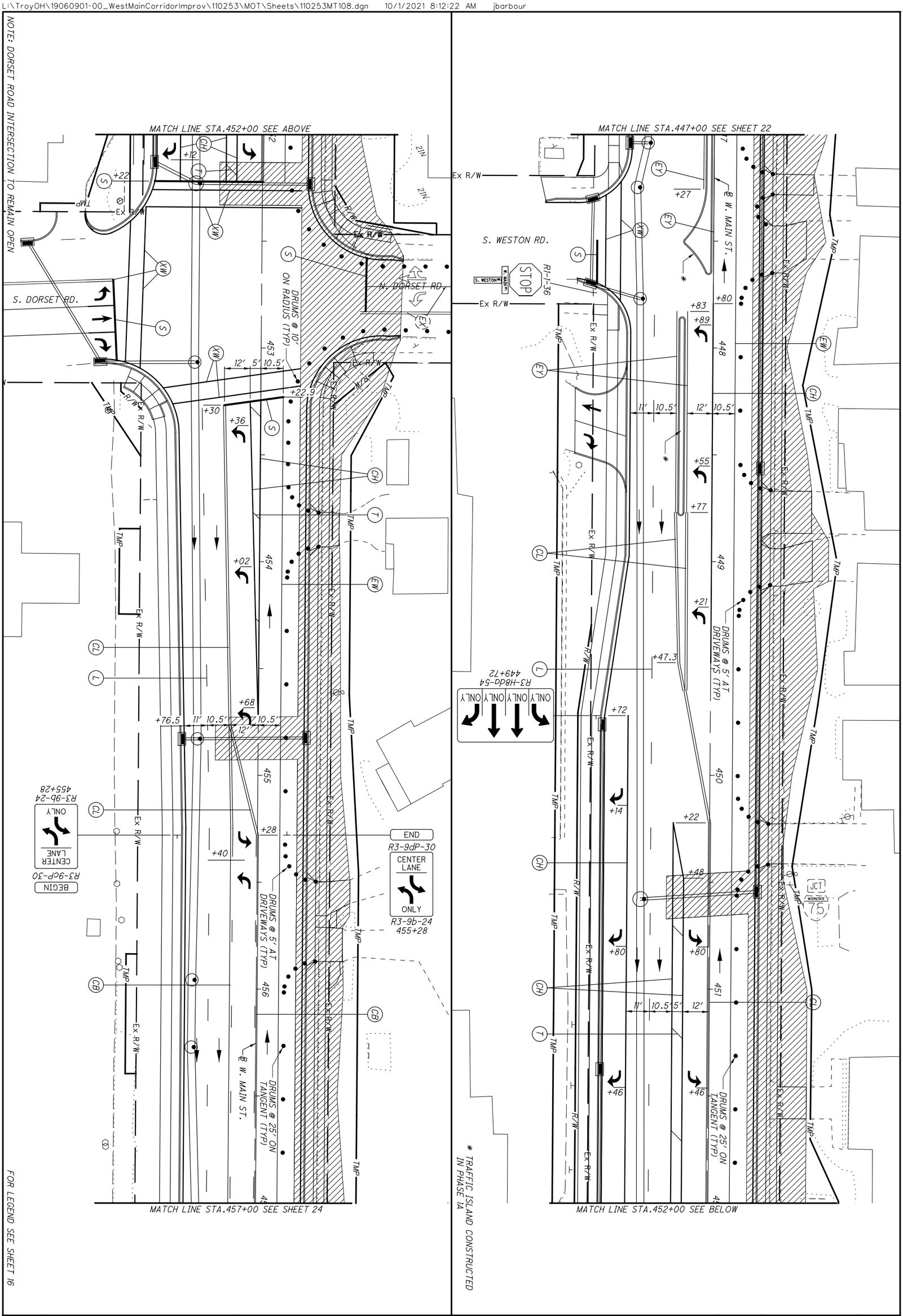

23 / 194	MIA-41-10.32	MAINTENANCE OF TRAFFIC PHASE 2	CALCULATED DJB CHECKED JWB	0 25 50 100 HORIZONTAL SCALE IN FEET

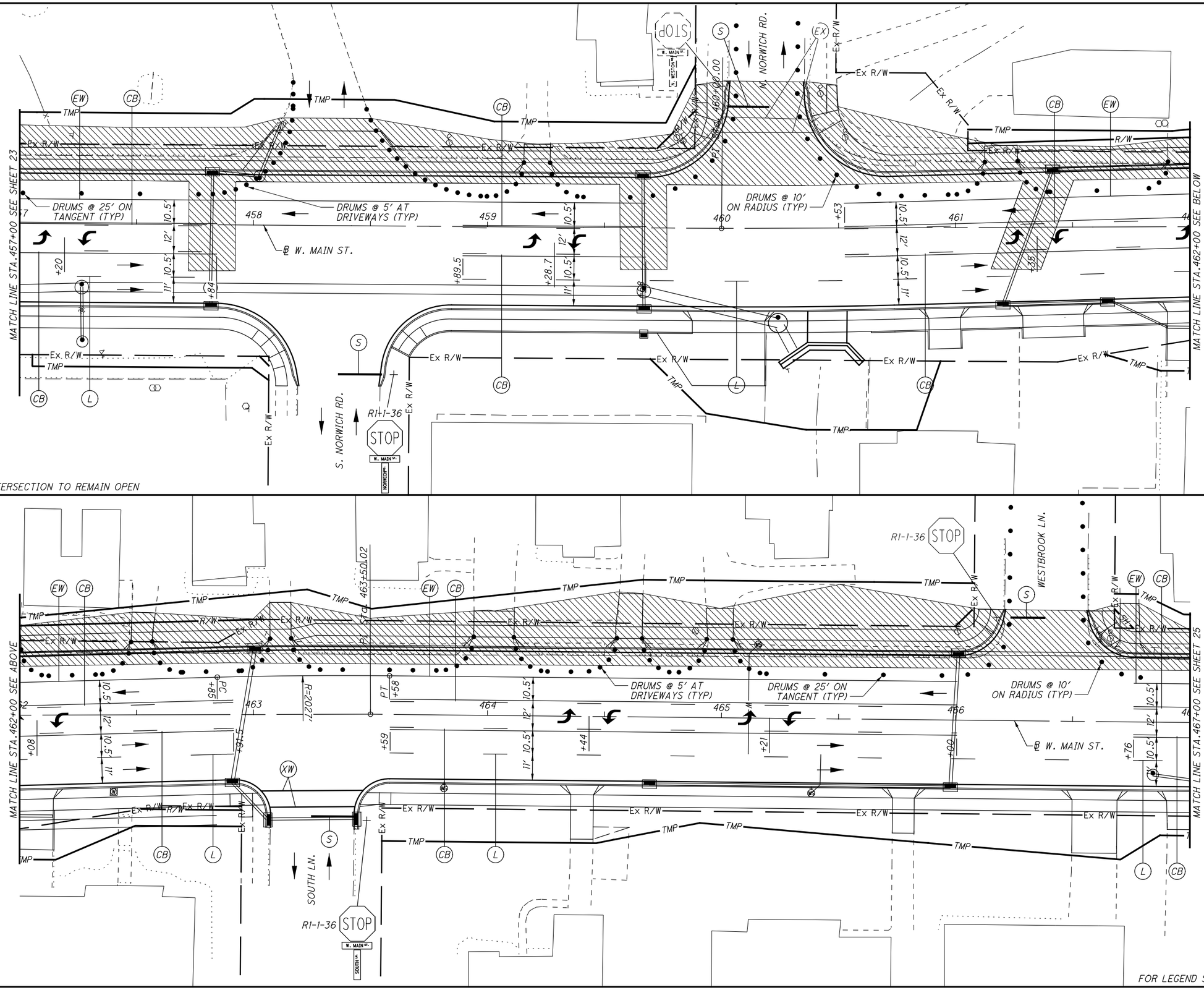

L:\TroyOH\19060901-00_WestMainCorridorImprov\110253\MOT\Sheets\110253MT109.dgn 10/1/2021 8:12:37 AM jbarbour

HORIZONTAL SCALE IN FEET
0 25 50 100

CALCULATED DJB
CHECKED JWB

MAINTENANCE OF TRAFFIC PHASE 2

MIA-41-10.32



FOR LEGEND SEE SHEET 16

25 / 194	MIA-41-10.32	MAINTENANCE OF TRAFFIC PHASE 2	CALCULATED DJB CHECKED JWB	0 50 25 100 HORIZONTAL SCALE IN FEET

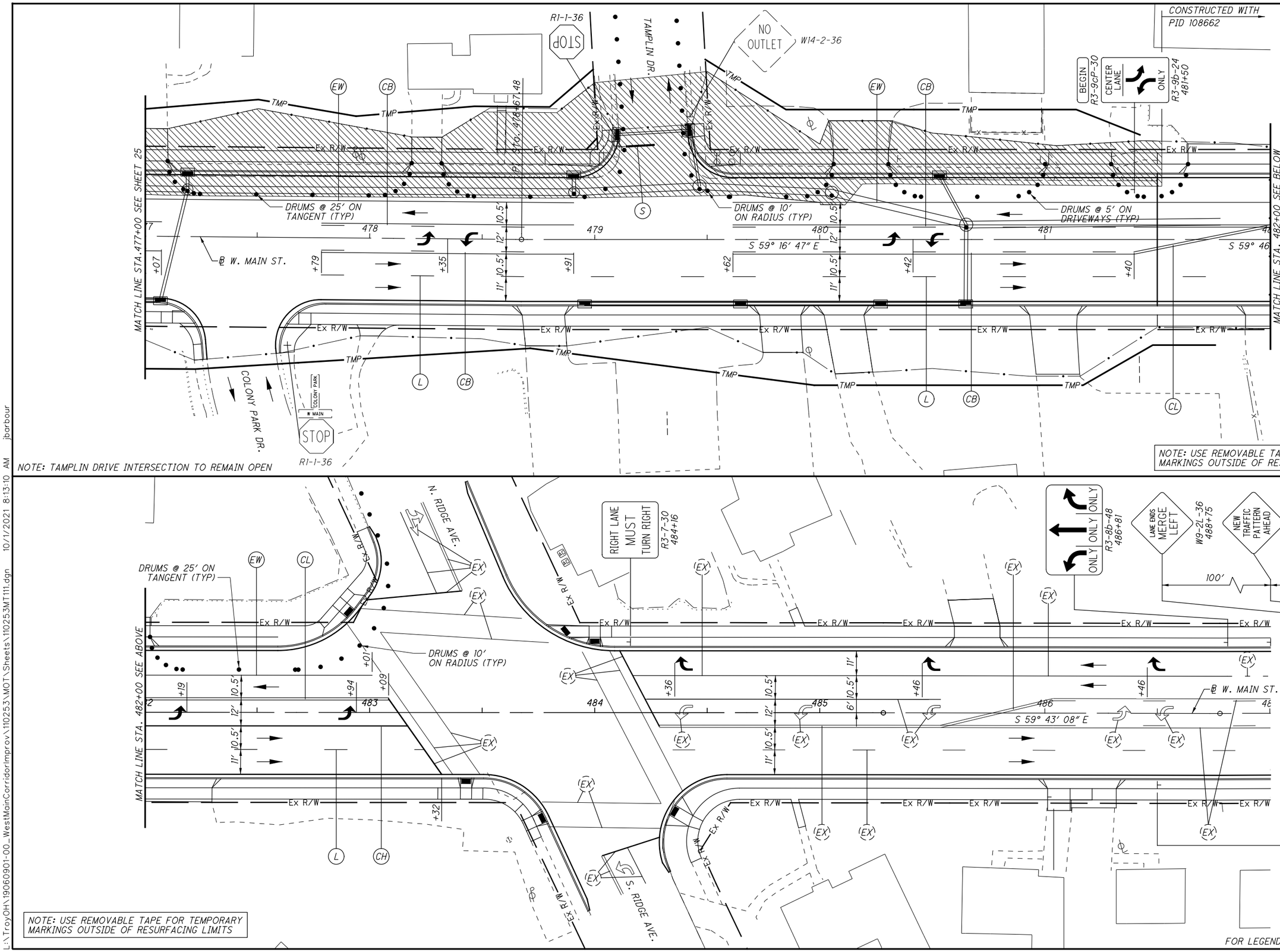

HORIZONTAL SCALE IN FEET 0 25 50 100

CALCULATED DJB
CHECKED JWB

MAINTENANCE OF TRAFFIC PHASE 2

MIA-41-10.32

L:\TroyOH\19060901-00_WestMainCorridorImprov\110253\MOT\Sheets\110253MT111.dgn 10/1/2021 8:13:10 AM jbarbour

SHEET NUM.															PART.	ITEM	ITEM EXT	GRAND TOTAL	UNIT	DESCRIPTION	SEE SHEET NO.
7	31	32	33	34	36	37	85	93	95	97	99	100	112	156							
																				ROADWAY	
																201	11000	LS		CLEARING AND GRUBBING	
		1														202	20010	1	EACH	HEADWALL REMOVED	
						2,761			585	2,480						202	23000	5,826	SY	PAVEMENT REMOVED	
						31,862				197						202	30000	32,059	SF	WALK REMOVED	
						17										202	30600	17	SY	CONCRETE MEDIAN REMOVED	
						6,397										202	32000	6,397	FT	CURB REMOVED	
	1,460	1,790	608													202	35100	3,858	FT	PIPE REMOVED, 24" AND UNDER	
	677	15														202	35200	692	FT	PIPE REMOVED, OVER 24"	
	3	7	2													202	58000	12	EACH	MANHOLE REMOVED	
	15	9	5													202	58100	29	EACH	CATCH BASIN REMOVED	
		1														202	58101	1	EACH	CATCH BASIN REMOVED, AS PER PLAN (TRENCH DRAIN)	9
		75														202	75101	75	FT	FENCE REMOVED FOR STORAGE, AS PER PLAN	8
	2															202	75611	2	EACH	VALVE BOX REMOVED, AS PER PLAN	120
		8	2													202	98100	10	EACH	REMOVAL MISC.: REMOVE AND RELOCATE PRIVATE SIGN	8
				4	1											202	98100	5	EACH	REMOVAL MISC.: GAS MARKER REMOVED	8
	2															202	98100	2	EACH	REMOVAL MISC.: PIPE REMOVED AND CURB AND PAVEMENT RESTORED	8
		67	36													202	98200	103	FT	REMOVAL MISC.: REMOVE AND RESET LANDSCAPING BLOCKS	8
								837								202	98400	837	SF	REMOVAL MISC.: PAVER WALKWAY REMOVED	8
							4,645									203	10000	4,645	CY	EXCAVATION	
							362									203	20000	362	CY	EMBANKMENT	
						8,238			95	2,098						204	10000	10,431	SY	SUBGRADE COMPACTION	
						2,746										204	13000	2,746	CY	EXCAVATION OF SUBGRADE	
						2,746										204	30010	2,746	CY	GRANULAR MATERIAL, TYPE B	
16																204	45000	16	HOUR	PROOF ROLLING	
						8,238										204	50000	8,238	SY	GEOTEXTILE FABRIC	
						31,282										608	12000	31,282	SF	5" CONCRETE WALK	
						270										608	13021	270	SF	7" CONCRETE WALK, AS PER PLAN	8
												11				608	41000	11	FT	CONCRETE STEPS, TYPE B	
						1,150										608	52000	1,150	SF	CURB RAMP	
						153										608	52001	153	SF	CURB RAMP, AS PER PLAN: 7" CONCRETE	8
											20					608	53020	20	SF	DETECTABLE WARNING	
								218								608	98000	218	SF	WALKWAY, MISC.: PAVER WALKWAY	8
														7		623	38500	7	EACH	MONUMENT ASSEMBLY	
														26		623	40500	26	EACH	REFERENCE MONUMENT	
																878	25000	LS		INSPECTION AND COMPACTION TESTING OF UNBOUND MATERIALS	
																				EROSION CONTROL	
									25							601	21050	25	SY	TIED CONCRETE BLOCK MAT WITH TYPE 1 UNDERLAYMENT	
													40			601	32104	40	CY	ROCK CHANNEL PROTECTION, TYPE B WITH GEOTEXTILE FABRIC	
2																659	00100	2	EACH	SOIL ANALYSIS TEST	
960																659	00300	960	CY	TOPSOIL	
8,650																659	10000	8,650	SY	SEEDING AND MULCHING	
435																659	14000	435	SY	REPAIR SEEDING AND MULCHING	
435																659	15000	435	SY	INTER-SEEDING	
1.2																659	20000	1.2	TON	COMMERCIAL FERTILIZER	
1.8																659	31000	1.8	ACRE	LIME	
48																659	35000	48	MGAL	WATER	
20																659	40000	20	MSF	MOWING	
																832	15000	LS		STORM WATER POLLUTION PREVENTION PLAN	
																832	15002	LS		STORM WATER POLLUTION PREVENTION INSPECTIONS	
																832	15010	LS		STORM WATER POLLUTION PREVENTION INSPECTION SOFTWARE	
150,000																832	30000	150,000	EACH	EROSION CONTROL	

CALCULATED ATW
CHECKED JCH

GENERAL SUMMARY

MIA-41-10.32

\\strand.com\projects\CIN\4300--4399\4354\004\Drawings\CAD\110253\roadway\sheets\Summaries\110253GG001.dgn Sheet 10/1/2021 4:37:55 PM Allisonw

SHEET NUM.															PART.	ITEM	ITEM EXT	GRAND TOTAL	UNIT	DESCRIPTION	SEE SHEET NO.
9	31	32	34	35	36	37	95	97	101	102	103	112	116	150							
																				DRAINAGE	
						7,781										605	14000	7,781	FT	6" BASE PIPE UNDERDRAINS	
						540										611	00510	540	FT	6" CONDUIT, TYPE F FOR UNDERDRAIN OUTLETS	
										987	1,207					611	04400	2,194	FT	12" CONDUIT, TYPE B	
										128	436					611	05900	564	FT	15" CONDUIT, TYPE B	
										12	1,227					611	07400	1,239	FT	18" CONDUIT, TYPE B	
										22	124					611	10400	146	FT	24" CONDUIT, TYPE B	
											382					611	13400	382	FT	30" CONDUIT, TYPE B	
										688	348					611	16400	1,036	FT	36" CONDUIT, TYPE B	
										538	399					611	19400	937	FT	42" CONDUIT, TYPE B	
												22				611	96320	22	FT	14' X 7' CONDUIT, TYPE A, 706.05	
																611	97300	LS		CONDUIT, MISC.: VIDEO INSPECTION OF SANITARY LATERALS	9
									36	12						611	98150	48	EACH	CATCH BASIN, NO. 3	
									1							611	98370	1	EACH	CATCH BASIN, NO. 6	
									1							611	98470	1	EACH	CATCH BASIN, NO. 2-2B	
			1													611	98630	1	EACH	CATCH BASIN ADJUSTED TO GRADE	
									21	5						611	99574	26	EACH	MANHOLE, NO. 3	
			4	8	2											611	99654	14	EACH	MANHOLE ADJUSTED TO GRADE	
			1													611	99660	1	EACH	MANHOLE RECONSTRUCTED TO GRADE	
			1	1												611	99661	2	EACH	MANHOLE RECONSTRUCTED TO GRADE, AS PER PLAN	8
											24					SPECIAL	61199830	24	FT	TRENCH DRAIN	43
1																895	10040	1	EACH	MANUFACTURED WATER QUALITY STRUCTURE, TYPE 4	9
																				PAVEMENT	
						8,317	358									252	01500	8,675	FT	FULL DEPTH PAVEMENT SAWING	
						22,456										254	01000	22,456	SY	PAVEMENT PLANING, ASPHALT CONCRETE	
585						1,307	4	103								302	46000	1,999	CY	ASPHALT CONCRETE BASE, PG64-22	
						1,759	16	315								304	20000	2,090	CY	AGGREGATE BASE	
						2,268	6	100								407	10000	2,374	GAL	TACK COAT	
						961										441	50000	961	CY	ASPHALT CONCRETE SURFACE COURSE, TYPE 1, (448), PG64-22	
						1,347										441	50300	1,347	CY	ASPHALT CONCRETE INTERMEDIATE COURSE, TYPE 2, (448)	
							13	28								441	50400	41	CY	ASPHALT CONCRETE SURFACE COURSE, TYPE 1, (448), (DRIVEWAYS)	
						64										452	09010	64	SY	4" NON-REINFORCED CONCRETE PAVEMENT, CLASS QC 1P	
								517								452	10010	517	SY	6" NON-REINFORCED CONCRETE PAVEMENT, CLASS QC 1P	
								479								452	12010	479	SY	8" NON-REINFORCED CONCRETE PAVEMENT, CLASS QC 1P	
						7,712										609	12001	7,712	FT	COMBINATION CURB AND GUTTER, TYPE 2, AS PER PLAN	8
						55										609	18001	55	FT	COMBINATION CURB AND GUTTER, TYPE 3, AS PER PLAN	8
						527	33	206								609	26001	766	FT	CURB, TYPE 6, AS PER PLAN	8
							223									609	28000	223	FT	CURB, TYPE 7	
																				WATER WORK	
													934			638	00601	934	FT	6" WATER MAIN DUCTILE IRON PIPE ANSI CLASS 52,	120
																				PUSH-ON JOINTS AND FITTINGS, AS PER PLAN	
													1			638	07800	1	EACH	6" GATE VALVE AND VALVE BOX	
													1			638	07900	1	EACH	8" GATE VALVE AND VALVE BOX	
			1	1												638	10300	2	EACH	FIRE HYDRANT EXTENDED AND ADJUSTED TO GRADE	
	2															638	10480	2	EACH	FIRE HYDRANT REMOVED	
													2			638	10500	2	EACH	FIRE HYDRANT REMOVED AND RESET	
			10	12												638	10800	22	EACH	VALVE BOX ADJUSTED TO GRADE	
			2	7	4											638	10900	13	EACH	SERVICE BOX ADJUSTED TO GRADE	
			1										14			638	11101	15	EACH	METER AND CHAMBER REMOVED AND RESET, AS PER PLAN	120
													2			638	10201	2	EACH	6" FIRE HYDRANT, AS PER PLAN	120
													250			638	05101	250	FT	2" COPPER SERVICE BRANCH, AS PER PLAN	120
			1	2												638	98000	3	EACH	WATER WORK, MISC.:WATER MANHOLE ADJUSTED TO GRADE	8
																				LIGHTING	
														50		625	00450	50	EACH	CONNECTION, FUSED PULL APART	
														25		625	18001	25	EACH	BRACKET ARM, 10', AS PER PLAN	
														21,900		625	23304	21,900	FT	NO. 8 AWG 600 VOLT DISTRIBUTION CABLE	
														2,652		625	23400	2,652	FT	NO. 10 AWG POLE AND BRACKET CABLE	
														5,990		625	25104	5,990	FT	CONDUIT, 1", 725.051	

\\strand.com\projects\CIN 4300--4399\4354\004\Drawings\CAD\110253\roadway\sheets\Summaries\110253GG002.dgn Sheet 10/1/2021 4:37:55 PM Allisonw

CALCULATED ATW CHECKED JCH

GENERAL SUMMARY

MIA-41-10.32

SHEET NUM.												PART.	ITEM	ITEM EXT	GRAND TOTAL	UNIT	DESCRIPTION	SEE SHEET NO.
31	32	33	34	35	36	95	121	122	128	141	150							
											25		625	26252	25	EACH	LUMINAIRE, CONVENTIONAL, SOLID STATE (LED), 194W, TYPE III, 240V	
											5,990		625	29003	5,990	FT	TRENCH, 24" DEEP, AS PER PLAN	
											25		625	30700	25	EACH	PULL BOX, 725.08, 18"	
											25		625	32000	25	EACH	GROUND ROD	
											1		625	34000	1	EACH	POWER SERVICE	
2	1												625	75401	3	EACH	LIGHT POLE REMOVED, AS PER PLAN	8
											25		632	89300	25	EACH	WOOD POLE	
																	OTHER UTILITIES	
				2	2								611	99690	4	EACH	MANHOLE, MISC.: TELE MANHOLE ADJUSTED TO GRADE	8
			11	16	4								611	99690	31	EACH	MANHOLE, MISC.: PULL BOX ADJUSTED TO GRADE	8
			3										611	99690	3	EACH	MANHOLE, MISC.: PULL BOX RECONSTRUCTED TO GRADE	8
				1									611	99690	1	EACH	MANHOLE, MISC.: SANITARY CLEANOUT RELOCATED	8
			6	3	2								SPECIAL	61199700	11	EACH	GAS VALVE BOX ADJUSTED TO GRADE	8
			3	1	4								611	99690	8	EACH	MANHOLE, MISC.: GAS SERVICE BOX ADJUSTED TO GRADE	8
									215				630	03100	215	FT	***TRAFFIC CONTROL***	
									177				630	80100	177	SF	GROUND MOUNTED SUPPORT, NO. 3 POST	
									40				630	84900	40	EACH	SIGN, FLAT SHEET	
									1				630	85100	1	EACH	REMOVAL OF GROUND MOUNTED SIGN AND DISPOSAL	
1													630	85601	1	EACH	REMOVAL OF GROUND MOUNTED SIGN AND REERECTION	
									20				630	86002	20	EACH	REMOVAL OF GROUND MOUNTED MAJOR SIGN AND REERECTION, AS PER PLAN	8
		6											631	94490	6	EACH	REMOVAL OF GROUND MOUNTED POST SUPPORT AND DISPOSAL	
								0.14					644	00100	0.14	MILE	REMOVAL, MISC.: REMOVE AND RELOCATED PRIVATE SIGN, ELECTRICAL	8
								1.32					644	00200	1.32	MILE	EDGE LINE, 4"	
							0.56	0.18					644	00300	0.74	MILE	LANE LINE, 4"	
							1,370						644	00400	1,370	FT	CENTER LINE	
								349					644	00500	349	FT	CHANNELIZING LINE, 8"	
								1,458					644	00600	1,458	FT	STOP LINE	
								66					644	00720	66	FT	CROSSWALK LINE	
						72							644	01200	72	FT	CHEVRON MARKING	
							30						644	01300	30	EACH	PARKING LOT STALL MARKING	
								1					644	01400	1	EACH	LANE ARROW	
						18							644	30000	18	FT	WORD ON PAVEMENT, 72"	
													644	30030	6	MILE	REMOVAL OF PAVEMENT MARKING	
																	TRAFFIC SIGNALS	
										1			625	00450	1	EACH	CONNECTION, FUSED PULL APART	
										1			625	00460	1	EACH	CONNECTION, UNFUSED PULL APART	
										1			625	18000	1	EACH	BRACKET ARM, 10'	
										150			625	23400	150	FT	NO. 10 AWG POLE AND BRACKET CABLE	
										27			625	25402	27	FT	CONDUIT, 2", 725.05	
										61			625	25502	61	FT	CONDUIT, 3", 725.05	
										111			625	25600	111	FT	CONDUIT, 4", 725.04	
										163			625	25902	163	FT	CONDUIT, JACKED OR DRILLED, 725.04, 1"	
										1			625	26252	1	EACH	LUMINAIRE, CONVENTIONAL, SOLID STATE (LED), 194W, TYPE III, 240V	
										184			625	29000	184	FT	TRENCH	
										3			625	30700	3	EACH	PULL BOX, 725.08, 18"	
										1			625	30706	1	EACH	PULL BOX, 725.08, 24"	
										2			625	31510	2	EACH	PULL BOX REMOVED	
			2		2								625	31600	4	EACH	PULL BOX, MISC.: TRAFFIC PULL BOX ADJUSTED TO GRADE	8
										8			625	32000	8	EACH	GROUND ROD	
										184			625	36010	184	FT	UNDERGROUND WARNING/MARKING TAPE	
										8			630	79101	8	EACH	SIGN HANGER ASSEMBLY, MAST ARM, AS PER PLAN	134
										30			630	80100	30	SF	SIGN, FLAT SHEET	
										4			630	80510	4	EACH	SIGN, STREET NAME	
										5			632	05007	5	EACH	VEHICULAR SIGNAL HEAD, (LED), 3-SECTION, 12" LENS, 1-WAY, POLYCARBONATE, AS PER PLAN, BLACK, WITH BACKPLATE	135

CALCULATED ATW
CHECKED JCH

GENERAL SUMMARY

MIA-41-10.32

\\strand.com\projects\CIN\4300--4399\4354\004\Drawings\CAD\110253\roadway\sheets\Summaries\110253GG003.dgn Sheet 10/1/2021 4:37:55 PM Allisonw

SHEET NUM.									PART.	ITEM	ITEM EXT	GRAND TOTAL	UNIT	DESCRIPTION	SEE SHEET NO.
10	11	13	112	141											
				6						632	05087	6	EACH	VEHICULAR SIGNAL HEAD, (LED), 5-SECTION, 12" LENS, 1-WAY, POLYCARBONATE, AS PER PLAN, BLACK, WITH BACKPLATE	135
				8						632	20731	8	EACH	PEDESTRIAN SIGNAL HEAD (LED), TYPE D2, COUNTDOWN, AS PER PLAN	134
				11						632	25000	11	EACH	COVERING OF VEHICULAR SIGNAL HEAD	
				8						632	25010	8	EACH	COVERING OF PEDESTRIAN SIGNAL HEAD	
				6						632	26000	6	EACH	PEDESTRIAN PUSHBUTTON	
				2						632	26001	2	EACH	PEDESTRIAN PUSHBUTTON, AS PER PLAN	135
				730						632	40500	730	FT	SIGNAL CABLE, 5 CONDUCTOR, NO. 14 AWG	
				2,210						632	40700	2,210	FT	SIGNAL CABLE, 7 CONDUCTOR, NO. 14 AWG	
				4						632	64010	4	EACH	SIGNAL SUPPORT FOUNDATION	
				3						632	64020	3	EACH	PEDESTAL FOUNDATION	
				70						632	68200	70	FT	POWER CABLE, 2 CONDUCTOR, NO. 6 AWG	
				100						632	69700	100	FT	SERVICE CABLE, 3 CONDUCTOR, NO. 8 AWG	
				1						632	70001	1	EACH	POWER SERVICE, AS PER PLAN	135
				3						632	72141	3	EACH	SIGNAL SUPPORT, TYPE TC-81.22, DESIGN 13, AS PER PLAN	134
				1						632	79111	1	EACH	COMBINATION SIGNAL SUPPORT, TYPE TC-81.22, DESIGN 4, AS PER PLAN	134
				3						632	89905	3	EACH	PEDESTAL, 10', TRANSFORMER BASE, AS PER PLAN	134
				1						632	90100	1	EACH	REMOVAL OF TRAFFIC SIGNAL INSTALLATION	
				1						633	67100	1	EACH	CABINET FOUNDATION	
				1						633	67200	1	EACH	CONTROLLER WORK PAD	
				1						633	75001	1	EACH	UNINTERRUPTIBLE POWER SUPPLY (UPS), 1000 WATT, AS PER PLAN	135
				1						633	99000	1	EACH	CONTROLLER ITEM, MISC.: CABINET, TYPE TS-1, AS PER PLAN	135
				2						809	69000	2	EACH	ADVANCE RADAR DETECTION	
				1						809	69123	1	EACH	ATC CONTROLLER, AS PER PLAN	135
				1						816	30001	1	EACH	VIDEO DETECTION SYSTEM, AS PER PLAN (ALTERNATE BID A)	135
				1						816	30001	1	EACH	VIDEO DETECTION SYSTEM, AS PER PLAN (ALTERNATE BID B)	135
														LANDSCAPING	
50										661	00500	50	CY	MULCH	
50										661	99900	50	EACH	PLANTING, MISC.: LANDSCAPING SHRUB	10
32										SPECIAL	69098300	32	SY	GRAVEL FOR LANDSCAPING	10
														STRUCTURE OVER 20 FOOT SPAN (MIA-41-10.85)	
										202	11201	LS		PORTIONS OF STRUCTURE REMOVED, AS PER PLAN	112
										503	11100	LS		COFFERDAMS AND EXCAVATION BRACING	
										503	21330	LS		UNCLASSIFIED EXCAVATION, INCLUDING ROCK AND/OR SHALE	
			4,595							509	10000	4,595	LB	EPOXY COATED REINFORCING STEEL	
			14							511	46010	14	CY	CLASS QC1 CONCRETE, RETAINING/WINGWALL NOT INCLUDING FOOTING	
			37							511	46510	37	CY	CLASS QC1 CONCRETE, FOOTING	
			1							511	46610	1	CY	CLASS QC1 CONCRETE, HEADWALL	
			42							512	10100	42	SY	SEALING OF CONCRETE SURFACES (EPOXY-URETHANE)	
			83							512	33000	83	SY	TYPE 2 WATERPROOFING	
			20							512	33010	20	SY	TYPE 3 WATERPROOFING	
			26							516	13600	26	SF	1" PREFORMED EXPANSION JOINT FILLER	
			44							517	76300	44	FT	RAILING, MISC.: STEEL RAILING	112
			16							518	21200	16	CY	POROUS BACKFILL WITH GEOTEXTILE FABRIC	
														MAINTENANCE OF TRAFFIC	
	475									410	12000	475	CY	TRAFFIC COMPACTED SURFACE, TYPE A OR B	
	425									410	13000	425	CY	TRAFFIC COMPACTED SURFACE, TYPE C	
	60									614	11110	60	HOUR	LAW ENFORCEMENT OFFICER WITH PATROL CAR FOR ASSISTANCE	
	80									614	13000	80	CY	ASPHALT CONCRETE FOR MAINTAINING TRAFFIC	
		1.53								614	20100	1.53	MILE	WORK ZONE LANE LINE, CLASS I, 4", 642 PAINT	
		0.19								614	20200	0.19	MILE	WORK ZONE LANE LINE, CLASS I, 4", 740.06, TYPE I	
	1.5									614	20550	1.5	MILE	WORK ZONE LANE LINE, CLASS III, 4", 642 PAINT	
		2.67								614	21100	2.67	MILE	WORK ZONE CENTER LINE, CLASS I, 642 PAINT	
		0.24								614	21200	0.24	MILE	WORK ZONE CENTER LINE, CLASS I, 740.06, TYPE I	
	1.25									614	21550	1.25	MILE	WORK ZONE CENTER LINE, CLASS III, 642 PAINT	
		1.56								614	22100	1.56	MILE	WORK ZONE EDGE LINE, CLASS I, 4", 642 PAINT	
		0.15								614	22200	0.15	MILE	WORK ZONE EDGE LINE, CLASS I, 4", 740.06, TYPE I	
	0.25									614	22350	0.25	MILE	WORK ZONE EDGE LINE, CLASS III, 4", 642 PAINT	
		1,639								614	23200	1,639	FT	WORK ZONE CHANNELIZING LINE, CLASS I, 8", 642 PAINT	
		824								614	23400	824	FT	WORK ZONE CHANNELIZING LINE, CLASS I, 8", 740.06, TYPE I	

CALCULATED ATW
CHECKED JCH

GENERAL SUMMARY

MIA-41-10.32

\\strand.com\projects\CIN\4300--4399\4354\004\Drawings\CAD\110253\roadway\sheets\Summaries\110253GG004.dgn Sheet 10/1/2021 4:37:56 PM Allisonw

REF NO.	SHEET NO.	ALIGNMENT (W. MAIN ST. UNLESS NOTED OTHERWISE)	STATION	SIDE	202									625	638	630	631								
					PIPE REMOVED, 24" AND UNDER	PIPE REMOVED, OVER 24"	MANHOLE REMOVED	CATCH BASIN REMOVED	FENCE REMOVED FOR STORAGE, AS PER PLAN	VALVE BOX REMOVED, AS PER PLAN	REMOVAL MISC.: REMOVE AND RELOCATE PRIVATE SIGN	REMOVAL MISC.: REMOVE AND RESET LANDSCAPING BLOCKS	ITEM 202 - REMOVAL MISC.: PIPE REMOVED AND CURB AND PAVEMENT RECONSTRUCTED	LIGHT POLE REMOVED, AS PER PLAN	FIRE HYDRANT REMOVED	REMOVAL OF GROUND MOUNTED MAJOR SIGN AND REERECTION, AS PER PLAN (SEE GENERAL NOTES)	REMOVAL MISC.: REMOVE AND RELOCATE PRIVATE SIGN, ELECTRICAL	HEADWALL TO BE REMOVED (FOR REFERENCE ONLY - SEE CULVERT DETAILS)	TRAFFIC SIGNAL ITEM REMOVED (FOR REFERENCE ONLY - SEE SIGNAL PLANS)						
					FT	FT	EACH	EACH	FT	EACH	EACH	FT	EA	EACH	EACH	EACH	EACH	EACH	EACH						
R-1	39		443+28.35 TO 444+44.06	RT	116																				
R-2	39		443+50.31	RT				1																	
R-3	39		443+50.71	RT				1																	
R-3A	39		443+49.66 443+50.71	LT/R	61																				
R-4	39		444+34.76 444+44.06	RT	47																				
R-4A	39		444+49.01	RT									1												
R-5	39		444+14.38	RT			1																		
R-5A	39		444+49.01	RT									1												
R-6	39		444+44.06 445+62.84	RT	118																				
R-7	39		444+54.94	RT										1											
R-8	39	COVENT ROAD	20+32.07	LT				1																	
R-8A	39	COVENT ROAD	20+16.52 20+32.07	LT	16																				
R-9	39	COVENT ROAD	20+36.52	RT						1															
R-10	39	COVENT ROAD	20+38.85	RT						1															
R-11	39	COVENT ROAD	20+42.42	RT											1										
R-12	39	HAWORTH COURT	2+37.37	LT				1																	
R-13	39	HAWORTH COURT	2+37.37	RT				1																	
R-14	39	HAWORTH COURT	2+37.37 2+37.37	LT/R	28																				
R-15A	40		445+44.07 445+62.81	RT	35																				
R-15B	40		446+12.63	RT			1																		
R-15	40		445+62.84 447+25.11	RT	163																				
R-16	40		447+00.035	RT				1																	
R-17	40		447+00.035 447+25.11	RT	28																				
R-18	40		447+25.11	RT				1																	
R-19	40		447+25.11 447+77.33	RT	52																				
R-20	40		447+77.33	RT				1																	
R-21	40		447+77.33 452+40.02	RT		463																			
R-22	41		451+76.29	RT										1											
R-23	41		452+13.06	RT				1																	
R-24	41		452+13.06 452+24.71	LT/R	52																				
R-25	41		452+22.67	RT																1					
R-26	41		452+24.71	LT				1																	
R-27	41		452+36.46	LT																1					
R-28	41		452+39.70	RT				1																	
R-29	41		452+39.70 453+11.81	RT	71																				
R-30	41		453+11.81	RT				1																	
R-31	41		453+11.81 457+26.86	RT	415																				
R-32	41		453+18.47	LT																1					
R-33	41		453+20.77	LT																1					
R-34	41		453+18.47 453+34.04	LT/R																1					
R-35	41		453+30.42	RT																1					
R-36	41		453+34.04	RT																1					
R-37	41		453+71.35	RT												1									
R-38A	42		457+26.84	RT			1																		
R-38B	42		457+27.26 457+26.84	RT	13																				
R-38	42		457+26.86 458+11.55	RT	85																				
R-39	42		457+85.35	RT				1																	
R-40	42		457+85.35 457+85.35	RT	13																				
R-41	42		457+85.35 458+11.13	LT/R	69																				
R-42	42		457+92.10	RT											1										
R-43	42		458+11.55	RT				1																	
R-44	42		458+11.55 460+25.95	RT		214																			
R-45	42		459+69.35	LT				1																	
R-46	42		459+69.35 460+31.56	LT/R	79																				
TOTALS CARRIED TO GENERAL SUMMARY					1460	677	3	15	0	2	0	0	2	2	2	1	0								

CALCULATED ATW
CHECKED JCH

ROADWAY SUBSUMMARY

MIA-41-10.32

\\strand.com\projects\CIN\4300 - 4399\4354\004\Drawings\CAD\110253\roadway\sheets\Summaries\110253GS001.dgn Sheet 10/1/2021 4:37:56 PM Allisonw

REF NO.	SHEET NO.	STATION	SIDE	202									625	638	630	631								
				PIPE REMOVED, 24" AND UNDER	PIPE REMOVED, OVER 24"	MANHOLE REMOVED	CATCH BASIN REMOVED	CATCH BASIN REMOVED, AS PER PLAN (TRENCH DRAIN)	FENCE REMOVED FOR STORAGE, AS PER PLAN	VALVE BOX REMOVED, AS PER PLAN	REMOVAL MISC.: REMOVE AND RELOCATE PRIVATE SIGN	REMOVAL MISC.: REMOVE AND RESET LANDSCAPING BLOCKS	LIGHT POLE REMOVED, AS PER PLAN	FIRE HYDRANT REMOVED	REMOVAL OF GROUND MOUNTED MAJOR SIGN AND REERECTION, AS PER PLAN (SEE GENERAL NOTES)	REMOVAL MISC.: REMOVE AND RELOCATE PRIVATE SIGN, ELECTRICAL	HEADWALL TO BE REMOVED (FOR REFERENCE ONLY - SEE CULVERT DETAILS)	TRAFFIC SIGNAL ITEM REMOVED (FOR REFERENCE ONLY - SEE SIGNAL PLANS)						
				FT	FT	EACH	EACH	EACH	FT	EACH	EACH	FT	EACH	EACH	EACH	EACH	EACH	EACH						
R-47	43	460+25.96	RT			1																		
R-48	43	460+31.29	RT				1																	
R-48A	43	460+25.96 TO 460+31.29	RT	11																				
R-49	43	460+36.10	RT			1																		
R-49A	43	460+25.96 TO 460+36.10	RT		15																			
R-50	43	460+48.38 TO 460+52.56	RT														1							
R-51	43	460+25.69 TO 460+61.51	RT														2							
R-52	43	460+80.05 TO 460+81.91	LT	20																				
R-53	43	460+80.05	LT				1																	
R-54	43	460+80.05 TO 461+40.44	LT	60																				
R-55	43	461+40.44	LT				1																	
R-56	43	461+40.44 TO 464+65.03	LT	325																				
R-57A	43	462+01.55	RT					1																
R-57	43	462+17.76	RT								1													
R-58	43	462+21.46	RT								1													
R-59	43	464+65.03	LT				1																	
R-60	43	464+68.71	RT				1																	
R-61	43	464+65.03 TO 464+69.25	LT/RT	54																				
R-62	43	464+88.42	LT								1													
R-107	44	466+37.04	RT								1													
R-63	44	466+59.78	LT			1																		
R-64	44	466+84.58	RT			1																		
R-65	44	466+84.58 TO 466+85.38	RT	17																				
R-66	44	466+85.38	RT			1																		
R-67	44	466+85.38 TO 469+85.70	RT	299																				
R-68	44	469+32.37	RT								1													
R-69	44	469+85.70	LT			1																		
R-70	44	469+85.70 TO 469+85.73	RT	17																				
R-71	44	469+85.73	RT				1																	
R-72	44	469+85.70 TO 469+91.93	LT	33																				
R-73	44	469+91.93	LT				1																	
R-74	44	469+85.70 TO 473+85.55	RT	400																				
R-75	45	471+01.96	RT								1													
R-76	45	471+42.35	LT								1													
R-77	45	471+77.64	RT										1											
R-77A	45	472+47.89	LT								1													
R-78	45	473+71.58	LT				1																	
R-79	45	473+71.58 TO 473+85.47	LT/RT	37																				
R-80	45	473+82.73	RT				1																	
R-81	45	473+82.73 TO 473+85.47	RT	16																				
R-82	45	473+85.47	RT			1																		
R-83	45	473+85.47	RT	466																				
R-84	45	473+96.78 TO 474+72.21	LT						75															
R-85	45	474+63.41 TO 474+76.60	RT									23												
R-85A	45	474+92.74 TO 475+00	LT									20												
R-86	45	474+96.58	RT									24												
TOTALS CARRIED TO GENERAL SUMMARY				1754	15	7	9	1	75	0	8	67	1	0	0	0								

CALCULATED ATW
CHECKED JCH

ROADWAY SUBSUMMARY

MIA-41-10.32

\\strand.com\projects\CIN\4300--4399\4354\004\Drawings\CAD\110253\roadway\sheets\Summaries\110253GS002.dgn Sheet 10/1/2021 4:37:56 PM Allisonw

REF NO.	SHEET NO.	STATION	SIDE	202									625	638	630	631	202							
				PIPE REMOVED, 24" AND UNDER	PIPE REMOVED, OVER 24"	MANHOLE REMOVED	CATCH BASIN REMOVED	CATCH BASIN REMOVED, AS PER PLAN (TRENCH DRAIN)	FENCE REMOVED FOR STORAGE, AS PER PLAN	VALVE BOX REMOVED, AS PER PLAN	REMOVAL MISC.: REMOVE AND RELOCATE PRIVATE SIGN	REMOVAL MISC.: REMOVE AND RESET LANDSCAPING BLOCKS	LIGHT POLE REMOVED, AS PER PLAN	FIRE HYDRANT REMOVED	REMOVAL OF GROUND MOUNTED MAJOR SIGN AND REERECTION, AS PER PLAN (SEE GENERAL NOTES)	REMOVAL MISC.: REMOVE AND RELOCATE PRIVATE SIGN, ELECTRICAL	HEADWALL REMOVED	TRAFFIC SIGNAL ITEM REMOVED (FOR REFERENCE ONLY - SEE SIGNAL PLANS)						
				FT	FT	EACH	EACH	EACH	FT	EACH	EACH	FT	EACH	EACH	EACH	EACH	EACH	EACH						
R-87A	46	475+13.61 | 475+21.90	LT									36												
R-87	46	477+01	RT				1																	
R-88A	46	477+15.27	LT													1								
R-88B	46	477+15.27	LT													1								
R-88	46	477+01 | 477+85.33	RT	84																				
R-89	46	477+09.15	RT								1													
R-90	46	477+18.74	RT								1													
R-91	46	477+85.18	RT			1																		
R-92	46	477+85.14 | 477+85.18	RT	16																				
R-93	46	477+85.14	RT				1																	
R-94	46	477+85.18 | 477+86.05	RT/LT	33																				
R-95	46	477+86.05	LT				1																	
R-96	46	477+85.18 | 479+56.21	RT	171																				
R-97	46	478+92.60	RT													1								
R-98	46	479+11.34	LT				1																	
R-99	46	479+11.64 | 479+40.36	LT	33																				
R-100	46	479+40.36	LT				1																	
R-101	46	479+40.36 | 479+56.21	LT/RT	59																				
R-102	46	479+56.21	RT			1																		
R-103	46	479+56.21 | 481+67.71	RT	212																				
R-104	46	479+68.25	RT													1								
R-105	47	480+34.78	LT													1								
R-106	47	480+98.04	RT													1								
TOTALS CARRIED TO GENERAL SUMMARY				608	0	2	5	0	0	0	2	36	0	0	0	6	0							

CALCULATED ATW
CHECKED JCH

ROADWAY SUBSUMMARY

MIA-41-10.32

\\strand.com\projects\CIN\4300--4399\4354\004\Drawings\CAD\110253\roadway\sheets\Summaries\110253GS003.dgn Sheet 10/1/2021 4:37:57 PM Allisonw

REF NO.	SHEET NO.	STATION	SIDE	202	611											625	638					
				REMOVAL, MISC.: GAS MARKER REMOVED	MANHOLE ADJUSTED TO GRADE	MANHOLE RECONSTRUCTED TO GRADE	MANHOLE RECONSTRUCTED TO GRADE, AS PER PLAN	CATCH BASIN ADJUSTED TO GRADE	MANHOLE, MISC.: SANITARY CLEANOUT ADJUSTED TO GRADE	MANHOLE, MISC.: PULL BOX ADJUSTED TO GRADE	MANHOLE, MISC.: PULL BOX RECONSTRUCTED TO GRADE	MANHOLE, MISC.: TELE MANHOLE ADJUSTED TO GRADE	MANHOLE, MISC.: REMOVE AND RESET GAS VALVE	SPECIAL - GAS VALVE BOX ADJUSTED TO GRADE	MANHOLE, MISC.: GAS SERVICE BOX ADJUSTED TO GRADE	PULL BOX, MISC.: TRAFFIC PULL BOX ADJUSTED TO GRADE	VALVE BOX ADJUSTED TO GRADE	WATER WORK, MISC.: WATER MANHOLE ADJUSTED TO GRADE	SERVICE BOX ADJUSTED TO GRADE	METER AND CHAMBER REMOVED AND RESET, AS PER PLAN	FIRE HYDRANT EXTENDED AND ADJUSTED TO GRADE	
				EACH	EACH	EACH	EACH	EACH	EACH	EACH	EACH	EACH	EACH	EACH	EACH	EACH	EACH	EACH	EACH	EACH	EACH	
U-1	39	442+74.44	RT													1						
U-2	39	443+49.66	LT					1														
U-3	39	443+76.37	RT							1												
U-4	39	444+13.38	LT															1				
U-5	39	444+17.12	LT														1					
U-6	39	444+19.30	RT														1					
U-7	39	444+21.62	RT														1					
U-8	39	444+24.46	RT														1					
U-9	39	444+25.66	RT							1												
U-10	39	444+50.04	RT													1						
U-11	39	444+57.69	LT											1								
U-12		NOT USED																				
U-13	40	447+18.95	RT											1								
U-14	40	447+74.68	RT							1												
U-15	40	447+94.25	RT							1												
U-16	40	448+39.07	LT																1			
U-17	40	449+77.23	LT											1								
U-18	41	451+78.60	RT								1											
U-19	41	452+41.58	RT														1					
U-20	42	455+01.03	LT												1							
U-21	42	455+64.94	LT												1							
U-22	42	455+67.18	LT											1								
U-23	42	455+67.71	LT							1												
U-24		NOT USED																				
U-25	42	457+26.03	LT												1							
U-26	42	457+91.87	RT														1					
U-27	42	459+02.67	LT							1												
U-28	43	460+00.71	RT			1																
U-29	43	460+03.15	LT											1								
U-30	43	460+08.87	LT														1					
U-31	43	460+21.05	RT	1																		
U-32	43	460+60.87	RT	1																		
U-33	43	460+62.72	RT	1																		
U-34	43	460+72.49	LT							1												
U-35	43	460+83.27	RT								1											
U-36	43	461+46.64	RT				1															
U-37	43	461+63.84	RT								1											
U-38	43	461+74.13	RT																	1		
U-39	43	461+68.25	LT							1												
U-40	43	462+27.46	RT		1																	
U-41	43	462+38.55	LT		1																	
U-42	43	462+51.40	LT											1								
U-43	43	463+27.96	LT							1												
U-44	43	463+36.14	LT		1																	
U-45	43	463+42.25	RT														1					
U-46	43	463+87.67	RT																		1	
U-47	43	463+87.74	RT														1					
U-48	43	464+19.59	RT														1					
U-49	43	464+30.81	RT		1																	
U-50	43	464+38.27	LT																1			
U-51	43	464+51.64	LT							1												
U-52	43	464+82.86	RT							1												
TOTALS CARRIED TO GENERAL SUMMARY				3	4	1	1	1	0	11	3	0	0	6	3	2	10	1	2	1	1	

UTILITY SUBSUMMARY

CALCULATED ATW
CHECKED JCH

MIA-41-10.32

\\strand.com\projects\CIN\4300--4399\4354\004\Drawings\CAD\110253\roadway\sheets\Summaries\110253US001.dgn Sheet 10/1/2021 4:37:57 PM Allisonw

REF NO.	SHEET NO.	STATION	SIDE	202	611											625	638						
				REMOVAL, MISC.: GAS MARKER REMOVED	MANHOLE ADJUSTED TO GRADE	MANHOLE RECONSTRUCTED TO GRADE	MANHOLE RECONSTRUCTED TO GRADE, AS PER PLAN	CATCH BASIN ADJUSTED TO GRADE	MANHOLE, MISC.: SANITARY CLEANOUT RELOCATED	MANHOLE, MISC.: PULL BOX ADJUSTED TO GRADE	MANHOLE, MISC.: PULL BOX RECONSTRUCTED TO GRADE	MANHOLE, MISC.: TELE MANHOLE ADJUSTED TO GRADE	MANHOLE, MISC.: REMOVE AND RESET GAS VALVE	SPECIAL - GAS VALVE BOX ADJUSTED TO GRADE	MANHOLE, MISC.: GAS SERVICE BOX ADJUSTED TO GRADE	PULL BOX, MISC.: TRAFFIC PULL BOX ADJUSTED TO GRADE	VALVE BOX ADJUSTED TO GRADE	WATER WORK, MISC.: WATER MANHOLE ADJUSTED TO GRADE	SERVICE BOX ADJUSTED TO GRADE	METER AND CHAMBER REMOVED AND RESET, AS PER PLAN	FIRE HYDRANT EXTENDED AND ADJUSTED TO GRADE		
				EACH	EACH	EACH	EACH	EACH	EACH	EACH	EACH	EACH	EACH	EACH	EACH	EACH	EACH	EACH	EACH	EACH	EACH		
U-53	44	466+36.63	RT														1						
U-54	44	466+40.53	RT																1				
U-55	44	466+76.11	RT									1											
U-56	44	466+87.36	RT							1													
U-57	44	467+04.74	LT																1				
U-58	44	467+08.26	RT														1						
U-59	44	467+30.84	LT		1																		
U-60	44	467+40.81	LT							1													
U-61	44	467+80.09	LT																1				
U-62	44	468+33.74	LT																				
U-63	44	468+44.94	LT														1						
U-64	44	468+65.48	LT							1													
U-65	44	468+68.94	RT							1													
U-66	44	468+93.03	LT							1													
U-67	44	469+26.46	RT											1									
U-68	44	469+29.36	RT														1						
U-69	44	469+60.35	LT											1									
U-70	44	469+71.51	LT							1													
U-71	44	469+93.93	RT														1						
U-72	44	469+98.31	LT																1				
U-73	45	470+23.04	LT							1													
U-74	45	470+30.95	RT		1																		
U-75	45	470+41.48	RT															1					
U-76	45	470+56.06	RT														1						
U-77	45	471+22.58	LT							1													
U-78	45	471+83.12	RT									1											
U-79	45	471+86.42	RT							1													
U-80	45	471+99.45	LT														1						
U-81	45	472+30.77	LT																		1		
U-82	45	472+34.57	RT																1				
U-83	45	472+37.72	RT														1						
U-84	45	472+43.21	LT							1													
U-85	45	472+79.57	LT							1													
U-86	45	473+17.95	RT							1													
U-87	45	473+30.83	RT		1																		
U-88	45	473+52.59	RT														1						
U-89	45	473+59.39	LT				1																
U-90	45	473+68.22	LT		1																		
U-91	45	473+72.55	RT						1														
U-92	45	473+99.37	LT																1				
U-93	45	474+12.22	RT		1																		
U-94	45	474+87.97	RT															1					
U-95	45	474+96.70	LT																1				
U-96	46	475+15.35	LT							1													
U-97	46	475+16.34	LT												1								
U-98	46	475+67.90	RT							1													
U-99	46	475+81.73	RT		1																		
U-100	46	475+87.67	LT							1													
U-101	46	476+51.50	RT														1						
U-102	46	477+31.80	RT														1						
U-103	46	477+42.16	LT		1																		
U-104	46	477+48.51	LT														1						
U-105	46	477+64.72	RT											1									
U-106	46	477+82.75	LT							1													
U-107	46	478+30.74	LT		1																		
TOTALS CARRIED TO GENERAL SUMMARY				0	8	0	1	0	1	16	0	2	0	3	1	0	12	2	7	0	1		

\\strand.com\projects\CIN\4300--4399\4354\004\Drawings\CAD\110253\roadway\sheets\Summaries\110253US002.dgn Sheet 10/1/2021 4:37:58 PM Allisonw

CALCULATED ATW
CHECKED JCH

UTILITY SUBSUMMARY

MIA-41-10.32

REF NO.	SHEET NO.	STATION	SIDE	202	611			611	638		
				REMOVAL, MISC.: GAS MARKER REMOVED	MANHOLE ADJUSTED TO GRADE	MANHOLE, MISC.: PULL BOX ADJUSTED TO GRADE	SPECIAL - GAS VALVE BOX ADJUSTED TO GRADE	MANHOLE, MISC.: TELE MANHOLE ADJUSTED TO GRADE	SERVICE BOX ADJUSTED TO GRADE		
				EACH	EACH	EACH	EACH	EACH	EACH		
U-108	46	478+41.45	RT					1			
U-109	46	478+65.07	RT			1					
U-110	46	478+70.32	RT					1			
U-111	46	479+18.98	RT						1		
U-112	46	479+28.75	LT		1						
U-113	46	479+35.08	RT						1		
U-114	46	479+52.12	LT				1				
U-115	46	479+92.41	LT						2		
U-116	46	479+99.08	LT	1							
U-117	47	480+48.08	LT			1					
U-118	47	480+64.51	LT				1				
U-119	47	480+80.49	LT		1						
U-120	47	481+41.41	RT			1					
U-121	47	481+42.11	LT			1					
TOTALS CARRIED TO GENERAL SUMMARY				1	2	4	2	2	4		

UTILITY SUBSUMMARY

CALCULATED ATW
CHECKED JCH

MIA-41-10.32

\\strand.com\projects\CIN\4300--4399\4354\004\Drawings\CAD\110253\roadway\sheets\Summaries\110253US003.dgn Sheet 10/1/2021 4:37:58 PM Allisonw

SHEET NO.	STATION FROM	STATION TO	202 PAVEMENT REMOVED	202 WALK REMOVED	202 CONCRETE MEDIAN REMOVED	202 CURB REMOVED	204 SUBGRADE COMPACTION	204 EXCAVATION OF SUBGRADE	204 GRANULAR MATERIAL, TYPE B	204 GEOTEXTILE FABRIC	252 FULL DEPTH PAVEMENT SAWING	254 PAVEMENT PLANING, ASPHALT CONCRETE	605 6" BASE PIPE UNDERDRAINS	611 6" CONDUIT, TYPE F FOR UNDERDRAIN OUTLETS
			SY	SF	SY	FT	SY	CY	CY	SY	FT	SY	FT	FT
39	441+15	445+00	131	1135	17	313	380	127	127	380	481	2199	355	30
39	20+00 (COVENT RD)	21+00 (CONVENT RD)	27	74	0	82	53	18	18	53	127	216	120	0
40	445+00	450+00	697	4029	0	757	1480	493	493	1480	1202	2416	995	60
41	450+00	455+00	567	4295	0	945	1600	533	533	1600	1157	2944	1016	80
41	41+52 (S DORSET RD)	41+83 (S DORSET RD)	27	0	0	26	8	3	3	8	27	210	26	0
42	455+00	460+00	593	4245	0	994	1129	376	376	1129	1004	2529	1015	40
43	460+00	465+00	236	4231	0	843	935	312	312	935	939	2755	990	80
44	465+00	470+00	163	3642	0	646	821	274	274	821	1025	2712	979	50
45	470+00	475+00	132	4181	0	779	795	265	265	795	1000	2648	1001	90
46	475+00	480+00	150	5087	0	862	805	268	268	805	1045	2834	984	90
47	480+00	482+50	38	943	0	150	231	77	77	231	310	993	300	20
TOTALS CARRIED TO GENERAL SUMMARY			2,761	31,862	17	6,397	8238	2746	2746	8238	8,317	22,456	7,781	540

SHEET NO.	STATION FROM	STATION TO	302 ASPHALT CONCRETE BASE, PG64-22	304 AGGEGATE BASE	407 TACK COAT	441 ASPHALT CONCRETE SURFACE COURSE, TYPE 1, (448), PG64-22	441 ASPHALT CONCRETE INTERMEDIATE COURSE, TYPE 2, (448)	452 4" NON-REINFORCED CONCRETE PAVEMENT, CLASS QC 1P	608 5" CONCRETE WALK	608 7" CONCRETE WALK	608 CURB RAMP	609 COMBINATION CURB AND GUTTER, TYPE 2, AS PER PLAN	609 COMBINATION CURB AND GUTTER, TYPE 3, AS PER PLAN	609 CURB, TYPE 6, AS PER PLAN
			CY	CY	GAL	CY	CY	SY	SF	SF	SF	FT	FT	FT
39	441+15	445+00	55	77	200	82	115	12	1101	0	167	396	0	49
39	20+00 (CONVENT RD)	21+00 (CONVENT RD)	7	11	20	8	12	0	171	0	53	0	0	119
40	445+00	450+00	275	290	335	125	175	51	3497	270	153**	1020	55	333
41	450+00	455+00	303	321	317	145	202	0	4407	0	188	1027	0	0
41	41+52 (S DORSET RD)	41+83 (S DORSET RD)	1	1	19	7	10	0	0	0	0	0	0	26
42	455+00	460+00	184	243	255	113	159	0	4450	0	87	1014	0	0
43	460+00	465+00	140	207	265	115	161	0	4147	0	348	992	0	0
44	465+00	470+00	110	188	255	109	153	0	4125	0	80	982	0	0
45	470+00	475+00	101	183	247	106	148	0	4134	0	0	1001	0	0
46	475+00	480+00	104	187	264	113	158	0	4257	0	227	980	0	0
47	480+00	482+50	28	51	91	38	54	0	993	0	0	300	0	0
TOTALS CARRIED TO GENERAL SUMMARY			1,307	1,759	2,268	961	1,347	64	31,282	270	1,150	7,712	55	527

** CURB RAMP, AS PER PLAN: 7" CONCRETE
SEE NOTE ON SHEET AND INTERSECTION DETAIL SHEET
153 SF HAS BEEN CARRIED TO THE GENERAL SUMMARY

TABLE A: SAW CUT LINE, LEFT OFFSET

BEGIN STA.	END STA.	SIDE	SAW CUT OFFSET FROM BL (FT)
444+63.08	446+75.05	LT	VARIES (20.50 TAPER TO 19.50)
446+75.05	459+67.73	LT	19.50
N. NORWICH ROAD			
460+71.26	462+87.20	LT	VARIES (20.00 TAPER TO 24.25)
462+87.20	466+72.22	LT	24.25
WESTBROOK LANE			
466+72.22	470+46.36	LT	25.50
470+46.36	471+92.21	LT	VARIES (25.50 TAPER TO 24.25)
471+92.21	478+67.70	LT	VARIES (24.25 TAPER TO 25.50)
478+67.70	481.50.00	LT	VARIES (25.50 TAPER TO 25.00)

TABLE B: SAW CUT LINE, RIGHT OFFSET

BEGIN STA.	END STA.	SIDE	SAW CUT OFFSET FROM BL (FT)
442+15.03	443+25.04	RT	VARIES (28.00 TAPER TO 29.25)
HAWORTH COURT			
444+57.14	445+05.74	RT	26.50
445+05.74	446+75.05	RT	VARIES (26.50 TAPER TO 22.50)
S. WESTON ROAD			
447+87.01	448+77.12	RT	9.50
448+77.12	452+75.97	RT	22.00
S. DORSET ROAD			
453+36.88	458+88.65	RT	21.50
S. NORWICH ROAD			
458+88.65	460+09.78	RT	VARIES (21.50 TAPER TO 20.00)
460+09.78	460+91.56	RT	VARIES (18.00 TAPER TO 19.00)
460+91.56	463+50.02	RT	VARIES (21.00 TAPER TO 23.50)
463+50.02	464+54.49	RT	23.5
464+54.49	467+29.55	RT	VARIES (23.50 TAPER TO 22.00)
467+29.55	470+72.04	RT	VARIES (22.00 TAPER TO 20.75)
470+72.04	471+85.56	RT	VARIES (20.75 TAPER TO 24.00)
471+85.56	477+42.59	RT	VARIES (24.00 TAPER TO 22.50)
COLONY PARK DRIVE			
477+42.59	478+67.48	RT	21.75
478+67.48	481+50.00	RT	VARIES (21.75 TAPER TO 23.50)

CALCULATED ATW
CHECKED JCH

PAVEMENT SUBSUMMARY

MIA-41-10.32

\\strand.com\projects\CIN\4300--4399\4354\004\Drawings\CAD\110253\roadway\sheets\Summaries\110253PS001.dgn 10/1/2021 4:37:58 PM Allisonw

PROJECT DESCRIPTION

WIDENING SR 41 (W. MAIN ST.) FROM I-75 TO RIDGE AVE. TO INCLUDE AT LEAST ONE 11' THROUGH LANE IN EACH DIRECTION, RECONSTRUCTING THE SIDEWALK AND CURB LAWN, REPLACING WATERMAIN AND STORM SEWER, AND IMPROVING SIGNALS AND LIGHTING THROUGHOUT THE CORRIDOR.

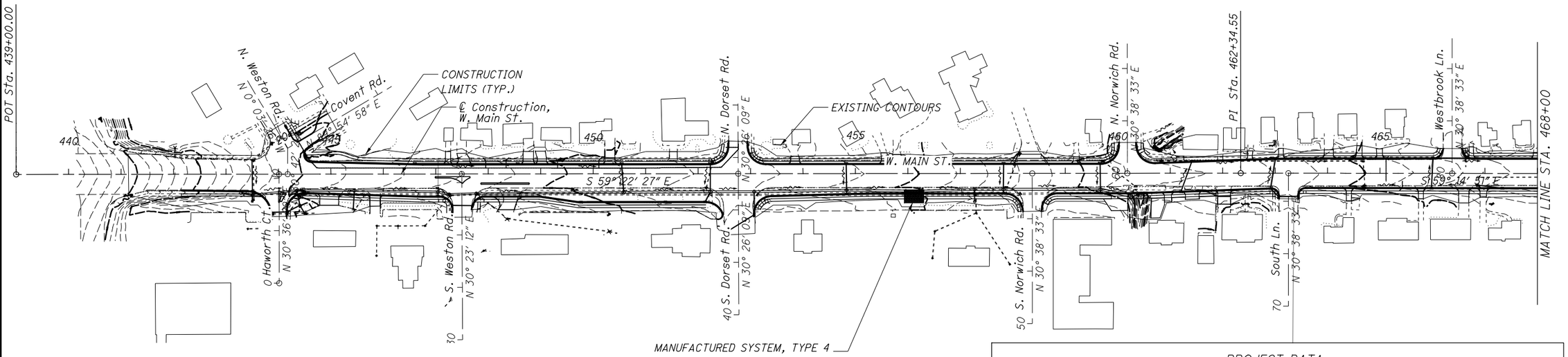

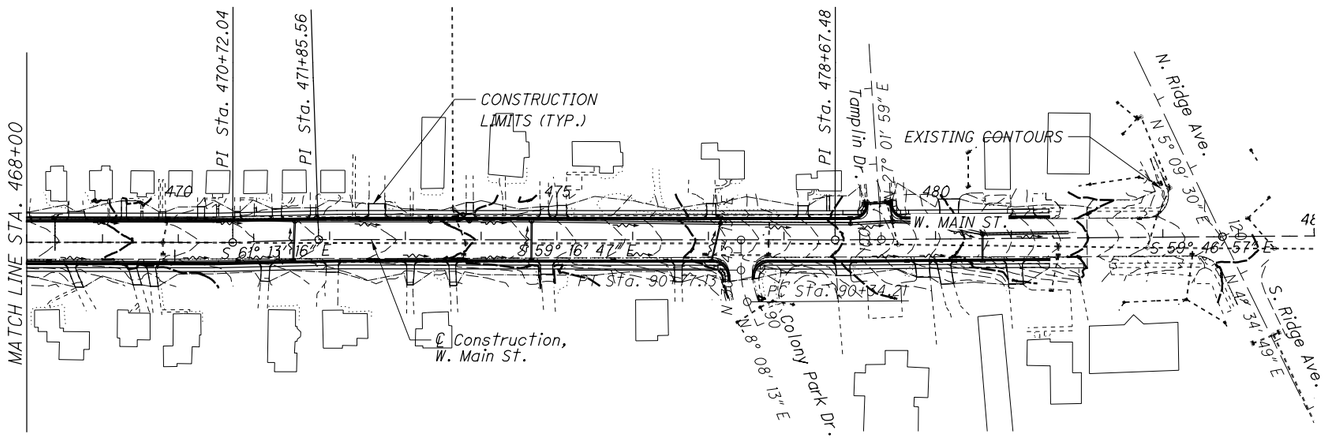

PROJECT DATA			
TOTAL AREA (RIGHT-OF-WAY)	8.0 AC	RUNOFF COEFFICIENT FOR PRE-CONSTRUCTION SITE	0.82
PROJECT EARTH DISTURBED AREA	4.5 AC	RUNOFF COEFFICIENT FOR POST-CONSTRUCTION SITE	0.84
ESTIMATED CONTRACTOR EARTH DISTURBED AREA	1.0 AC	POST CONSTRUCTION BMP:	TYPE 4 MANUFACTURED SYSTEM
NOTICE OF INTENT EARTH DISTURBED AREA	5.5 AC	IMMEDIATE RECEIVING WATERS	GREAT MIAMI RIVER
IMPERVIOUS (PAVED) AREA FOR PRE-CONSTRUCTION SITE	6.7 AC	SUBSEQUENT RECEIVING WATERS	GREAT MIAMI RIVER
IMPERVIOUS (PAVED) AREA FOR POST CONSTRUCTION SITE	7.0 AC	EDA CREDIT	2.68 AC
REQUIRED TREATMENT	1.14 AC		

LEGEND

- PROPOSED CATCH BASIN
- PROPSED STORM MANHOLE
- PROPOSED MANUFACTURED SYSTEM TYPE 4
- PROPOSED STORM SEWER

USGS MAP: TROY QUADRANGLE
TROY, OHIO

LATITUDE: 40°02'55"*

LONGITUDE: 84°13'28"*

*APPROXIMATE CENTER OF PROJECT

BMP TYPE	LATITUDE	LONGITUDE	EDA TREATMENT CREDIT (ACRES)	REQUIRED TREATMENT AREA (ACRES)
MANUFACTURED SYSTEM TYPE 4 (MS4)	40.049375	84.226100	2.68	1.14

HORIZONTAL SCALE IN FEET
0 50 100 200

PROJECT SITE PLAN

MIA-41-10.32

S:\CIN\4300-4399\4354\004\Drawings\CAD\110253\drainage\sheets\10253DE001.dgn 10/1/2021 4:38:00 PM Allisonw

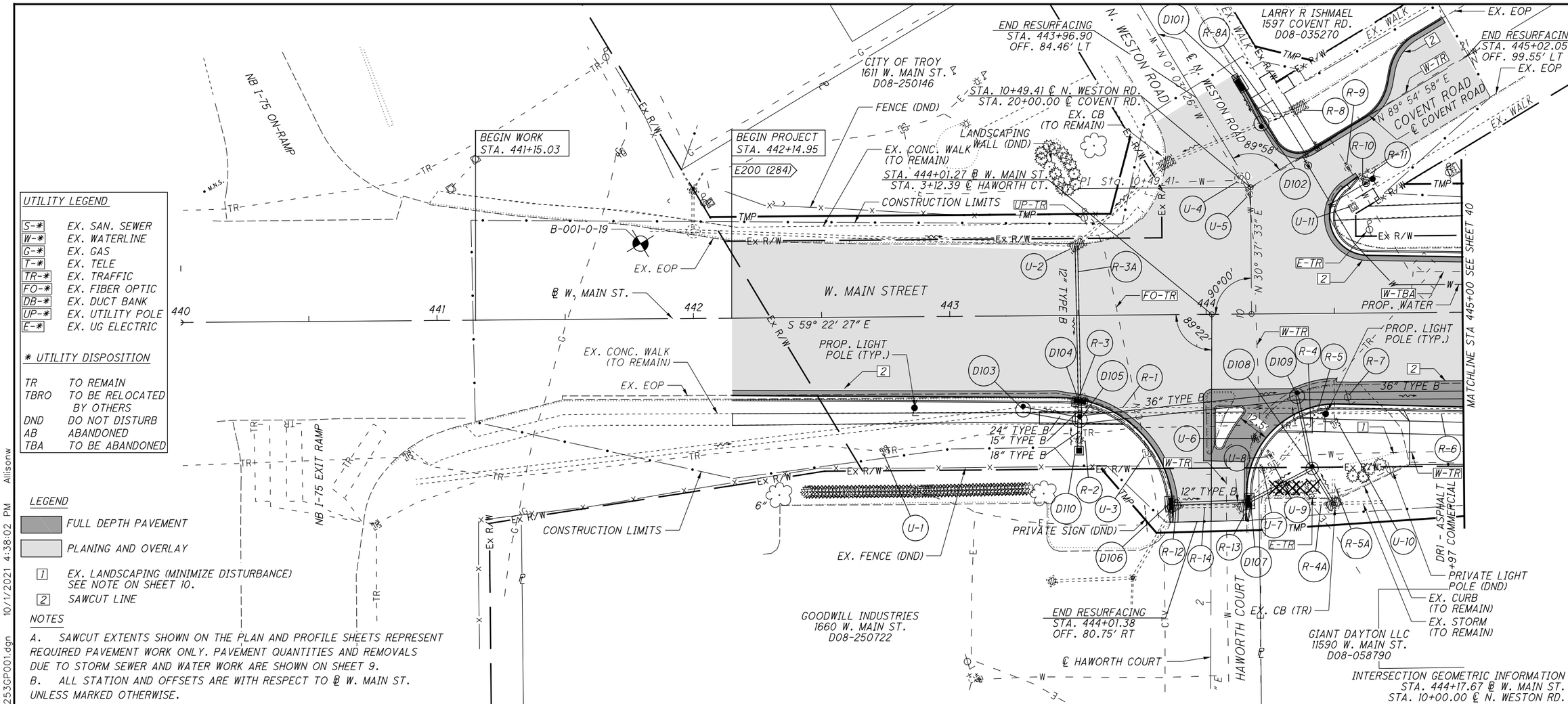

UTILITY LEGEND

S-*	EX. SAN. SEWER
W-*	EX. WATERLINE
G-*	EX. GAS
T-*	EX. TELE
TR-*	EX. TRAFFIC
FO-*	EX. FIBER OPTIC
DB-*	EX. DUCT BANK
UP-*	EX. UTILITY POLE
E-*	EX. UG ELECTRIC

* UTILITY DISPOSITION

TR	TO REMAIN
TBRO	TO BE RELOCATED BY OTHERS
DND	DO NOT DISTURB
AB	ABANDONED
TBA	TO BE ABANDONED

LEGEND

FULL DEPTH PAVEMENT

PLANING AND OVERLAY

1 EX. LANDSCAPING (MINIMIZE DISTURBANCE) SEE NOTE ON SHEET 10.

2 SAWCUT LINE

NOTES

A. SAWCUT EXTENTS SHOWN ON THE PLAN AND PROFILE SHEETS REPRESENT REQUIRED PAVEMENT WORK ONLY. PAVEMENT QUANTITIES AND REMOVALS DUE TO STORM SEWER AND WATER WORK ARE SHOWN ON SHEET 9.

B. ALL STATION AND OFFSETS ARE WITH RESPECT TO ℄ W. MAIN ST. UNLESS MARKED OTHERWISE.

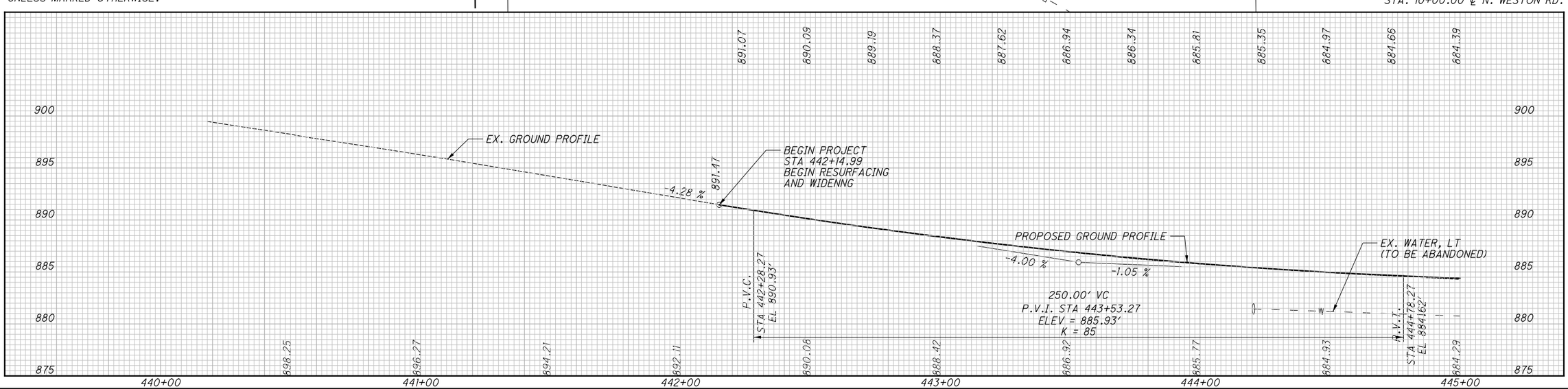

HORIZONTAL SCALE IN FEET 0 10 20 40

CALCULATED ATW
CHECKED JCH

PLAN AND PROFILE-STA 440+00 TO STA 445+00
WEST MAIN STREET (SR 41)

MIA-41-10.32

S:\CIN\4300--4399\4354\004\Drawings\CAD\110253\roadway\sheets\110253GP001.dgn 10/1/2021 4:38:02 PM Allisonw

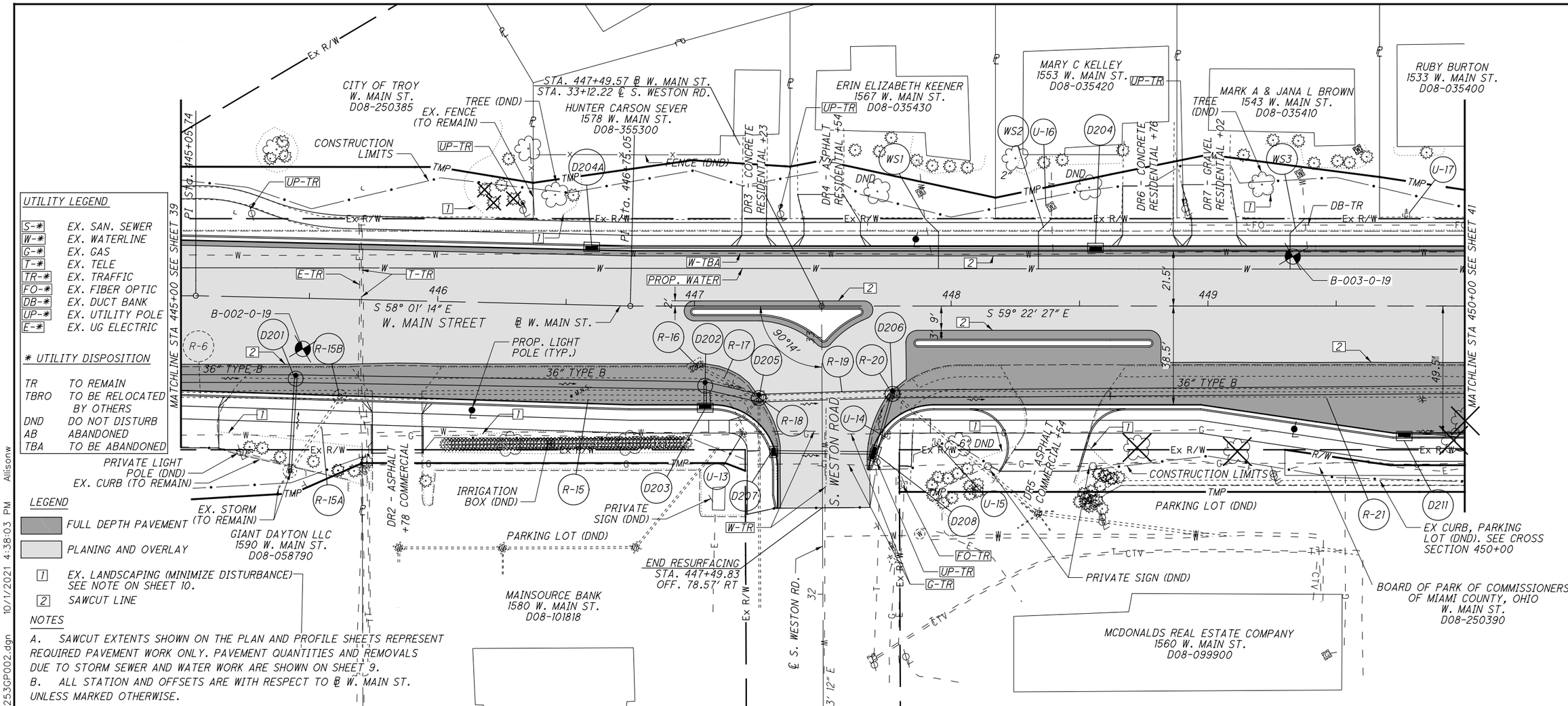

UTILITY LEGEND

S-*	EX. SAN. SEWER
W-*	EX. WATERLINE
G-*	EX. GAS
T-*	EX. TELE
TR-*	EX. TRAFFIC
FO-*	EX. FIBER OPTIC
DB-*	EX. DUCT BANK
UP-*	EX. UTILITY POLE
E-*	EX. UG ELECTRIC

* UTILITY DISPOSITION

TR	TO REMAIN
TBRO	TO BE RELOCATED BY OTHERS
DND	DO NOT DISTURB
AB	ABANDONED
TBA	TO BE ABANDONED

LEGEND

FULL DEPTH PAVEMENT

PLANING AND OVERLAY

1 EX. LANDSCAPING (MINIMIZE DISTURBANCE) SEE NOTE ON SHEET 10.

2 SAWCUT LINE

NOTES

A. SAWCUT EXTENTS SHOWN ON THE PLAN AND PROFILE SHEETS REPRESENT REQUIRED PAVEMENT WORK ONLY. PAVEMENT QUANTITIES AND REMOVALS DUE TO STORM SEWER AND WATER WORK ARE SHOWN ON SHEET 9.

B. ALL STATION AND OFFSETS ARE WITH RESPECT TO ℄ W. MAIN ST. UNLESS MARKED OTHERWISE.

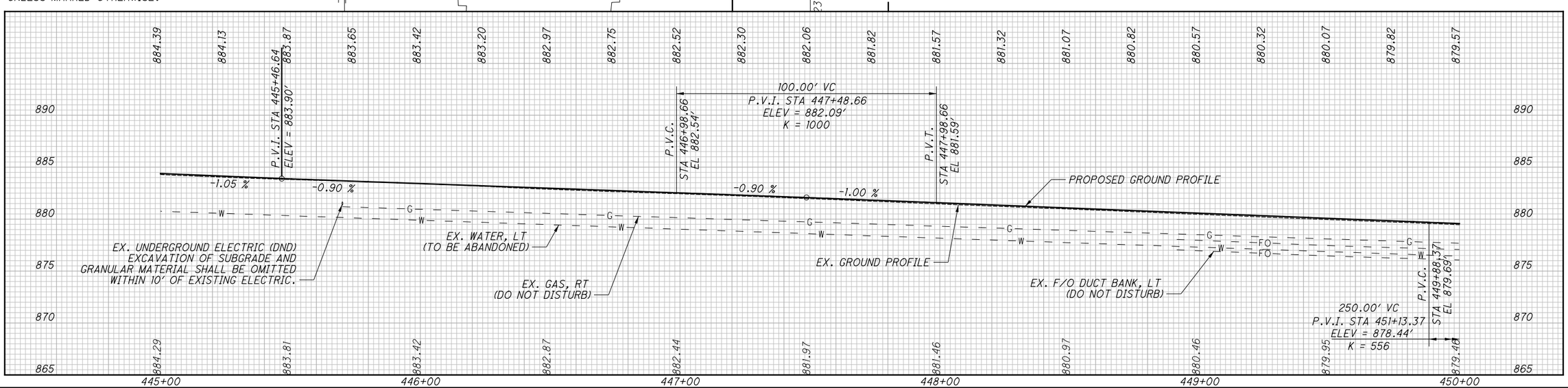

HORIZONTAL SCALE IN FEET 0 10 20 40

CALCULATED ATW
CHECKED JCH

PLAN AND PROFILE-STA 445+00 TO STA 450+00 WEST MAIN STREET (SR 41)

MIA-41-10.32

S:\CIN\4300--4399\4354\004\Drawings\CAD\110253\roadway\sheets\110253GP002.dgn 10/1/2021 4:38:03 PM Allisonw

RUBY BURTON
1533 W. MAIN ST.
D08-035400

THE MISSIONARY CHURCH EAST CENTRAL DISTRICT
1509 W. MAIN ST.
D08-035382

END RESURFACING
STA. 452+76.42
OFF. 65.64' LT.

STA. 452+76.64 ℄ W. MAIN ST.
STA. 42+65.02 ℄ N. DORSET RD.
STA. 42+65.02 ℄ S. DORSET RD.

SOLUTIONS REAL ESTATE INVESTMENTS LLC
1496 CROYDON RD.
D08-034630

STUCK PROPERTIES I LLC
1479 W. MAIN ST.
D08-034640

AMANDA L. WEHUNT
1463 W. MAIN ST.
D08-034650

CENTERPOINT ENERGY
W. MAIN ST.
D08-404036

REGULATOR STATION (DND)

EX. STEPS (DND)

PRIVATE SIGN
DO NOT DISTURB

EX. CURB (TO REMAIN)

CONSTRUCTION LIMITS

LANDSCAPING (DND)

DR8 - ASPHALT RESIDENTIAL +32

DR9 - CONCRETE RESIDENTIAL +85

N. DORSET ROAD

N 30° 26' 09" E

℄ N. DORSET RD.

MATCHLINE STA 450+00 SEE SHEET 40

MATCHLINE STA 455+00 SEE SHEET 42

W. MAIN STREET

℄ W. MAIN ST.

PROP. WATER

GAS MARKER (TO REMAIN)

S 59° 22' 27" E

90°11'

42" TYPE B

12" TYPE B

15" TYPE B

B-004-0-19

EX CURB, PARKING LOT (DND). SEE CROSS SECTION 450+00

EX. SIGN REMOVED AS PER PLAN
SEE NOTE ON SHEET

BOARD OF PARK COMMISSIONERS OF MIAMI COUNTY, OHIO
W. MAIN ST. D08-250390

CONSTRUCTION LIMITS

EOP, PARKING LOT (DND)

PROP. LIGHT POLE (TYP.)

PRIVATE SIGN AND WALL (DND)

EX DRIVE CURB (DND)

MCDONALDS REAL ESTATE COMPANY
1560 W. MAIN ST.
D08-099900

NATIONAL CITY BANK OF DAYTON
10 S. DORSET RD.
D08-099990

NATIONAL CITY BANK OF DAYTON
10 S. DORSET RD.
D08-099980

S. DORSET ROAD

℄ S. DORSET RD.

N 30° 26' 09" E

PRIVATE SIGN AND WALL (DND)

END RESURFACING
STA. 452+77.01
OFF. 111.74' RT.

DW28 TROY OHIO LLC
1420 W. MAIN ST.
D08-100020

DW28 TROY OHIO LLC
1420 W. MAIN ST.
D08-100040

BOARD OF PARK COMMISSIONERS OF MIAMI COUNTY, OHIO
D08-250392

Ex R/W

TMP

FO

W

G

E

SAN

CTV

UP-TR

G-TR

W-TBA

FO-TR

G-AB

E-TR

DB-TR

TR

UP-TBRO

21.5'

49.5'

43

42

451

452

453

454

WS4 D210 D209 D301A D301 D302 D303 D304 D305 D306 D307 D308 D309

R-21 R-22 R-23 R-24 R-25 R-26 R-27 R-28 R-29 R-30 R-31 R-32 R-33 R-34 R-35 R-36 R-37

U-18 U-19

SW1

UTILITY LEGEND

S-*	EX. SAN. SEWER
W-*	EX. WATERLINE
G-*	EX. GAS
T-*	EX. TELE
TR-*	EX. TRAFFIC
FO-*	EX. FIBER OPTIC
DB-*	EX. DUCT BANK
UP-*	EX. UTILITY POLE
E-*	EX. UG ELECTRIC

* UTILITY DISPOSITION

TR	TO REMAIN
TBRO	TO BE RELOCATED BY OTHERS
DND	DO NOT DISTURB
AB	ABANDONED
TBA	TO BE ABANDONED

LEGEND

FULL DEPTH PAVEMENT

PLANING AND OVERLAY

1 EX. LANDSCAPING (MINIMIZE DISTURBANCE) SEE NOTE ON SHEET 10.

2 SAWCUT LINE

NOTES

A. SAWCUT EXTENTS SHOWN ON THE PLAN AND PROFILE SHEETS REPRESENT REQUIRED PAVEMENT WORK ONLY. PAVEMENT QUANTITIES AND REMOVALS DUE TO STORM SEWER AND WATER WORK ARE SHOWN ON SHEET 9.

B. ALL STATION AND OFFSETS ARE WITH RESPECT TO ℄ W. MAIN ST. UNLESS MARKED OTHERWISE.

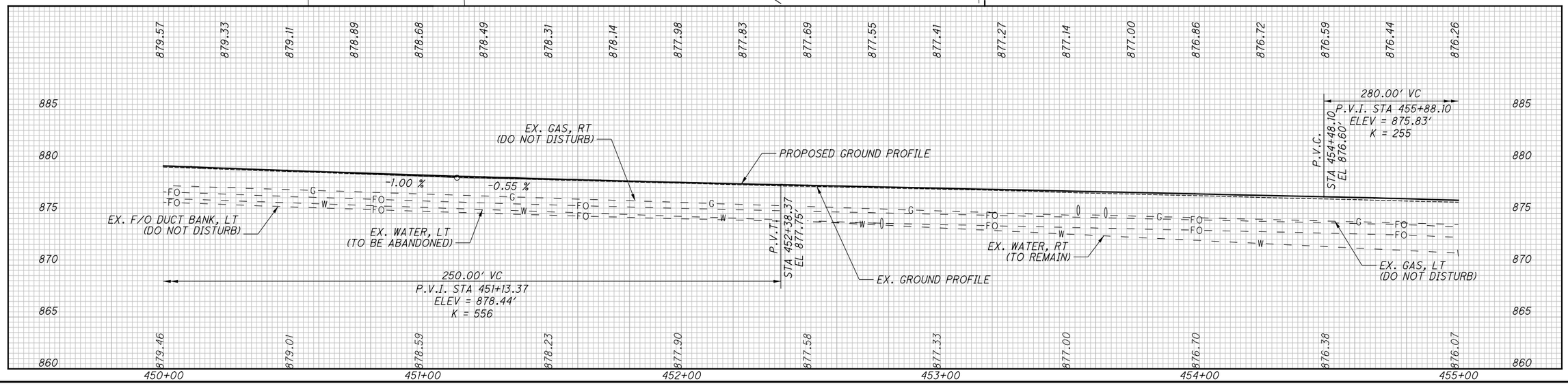

10/1/2021 4:38:03 PM Allisonw

S:\CIN\4300-4399\4354\004\Drawings\CAD\110253\roadway\sheets\110253GP003.dgn

HORIZONTAL SCALE IN FEET 0 10 20 40

CALCULATED ATW CHECKED JCH

PLAN AND PROFILE-STA 450+00 TO STA 455+00 WEST MAIN STREET (SR 41)

MIA-41-10.32

41 194

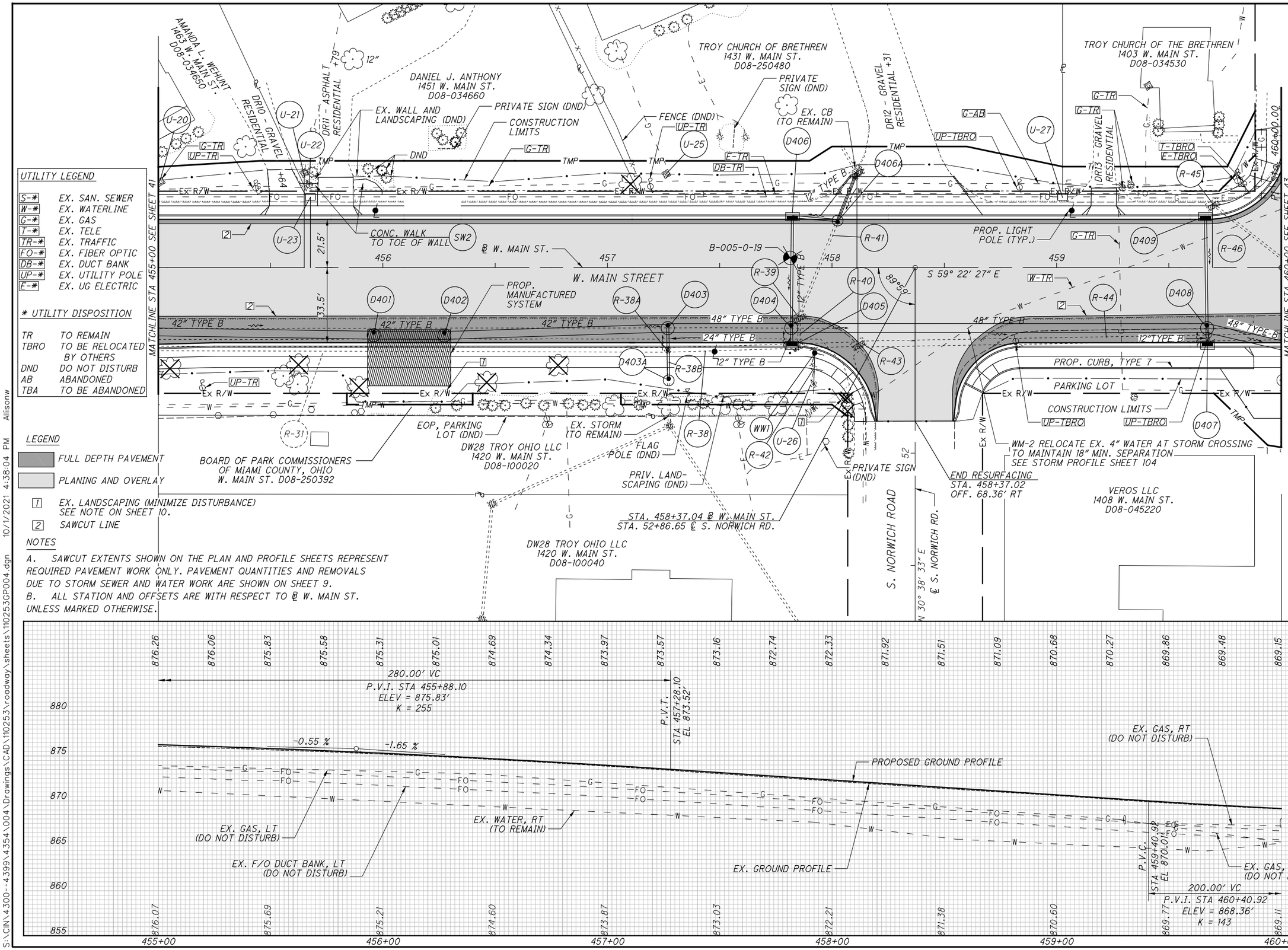

UTILITY LEGEND

S-*	EX. SAN. SEWER
W-*	EX. WATERLINE
G-*	EX. GAS
T-*	EX. TELE
TR-*	EX. TRAFFIC
FO-*	EX. FIBER OPTIC
DB-*	EX. DUCT BANK
UP-*	EX. UTILITY POLE
E-*	EX. UG ELECTRIC

* UTILITY DISPOSITION

TR	TO REMAIN
TBRO	TO BE RELOCATED BY OTHERS
DND	DO NOT DISTURB
AB	ABANDONED
TBA	TO BE ABANDONED

LEGEND

FULL DEPTH PAVEMENT

PLANING AND OVERLAY

1 EX. LANDSCAPING (MINIMIZE DISTURBANCE) SEE NOTE ON SHEET 10.

2 SAWCUT LINE

NOTES

A. SAWCUT EXTENTS SHOWN ON THE PLAN AND PROFILE SHEETS REPRESENT REQUIRED PAVEMENT WORK ONLY. PAVEMENT QUANTITIES AND REMOVALS DUE TO STORM SEWER AND WATER WORK ARE SHOWN ON SHEET 9.

B. ALL STATION AND OFFSETS ARE WITH RESPECT TO ℄ W. MAIN ST. UNLESS MARKED OTHERWISE.

HORIZONTAL SCALE IN FEET 0 10 20 40

CALCULATED ATW

CHECKED JCH

PLAN AND PROFILE-STA 455+00 TO STA 460+00 WEST MAIN STREET (SR 41)

MIA-41-10.32

S:\CIN\4300--4399\4354\004\Drawings\CAD\110253\roadway\sheets\110253GP004.dgn 10/1/2021 4:38:04 PM Allisonw

INTERSECTION GEOMETRIC INFORMATION
STA. 460+18.34 ℄ W. MAIN ST.
STA. 60+00.00 ℄ N. NORWICH RD.

END RESURFACING
STA. 460+19.00
OFF. 62.67 LT

N. NORWICH ROAD

SPAYDE PROPERTIES LLC
55 N. NORWICH RD.
D08-034520

DAVID R. PLUMMER
1309 W. MAIN ST.
D08-098520

MICHEAL A. & REBA G. RAMEY
1307 W. MAIN ST.
D08-098500

JACQULYN L. WALTERS
1305 W. MAIN ST
D08-097120

MA ELENA MASTERS
1303 W. MAIN ST.
D08-098480

PAMELA D. STOVER & MARY BETH MOORE TRUSTEES
1301 W. MAIN ST.
D08-098460

TROY ALTMAN
1311 W. MAIN ST.
D08-098540

EX, HEADWALL
PROP. TRANSFORMER

CONSTRUCTION LIMITS

EX. PAVERS (TO REMAIN)

W. MAIN STREET

℄ W. MAIN ST.

S 59° 59' 14" E

PROP. LIGHT POLE (TYP.)

MATCHLINE STA 460+00 SEE SHEET 42

MATCHLINE STA 465+00 SEE SHEET 44

DR16 - ASPHALT COMMERCIAL +20

DR18 - ASPHALT COMMERCIAL +96

DR20 - ASPHALT COMMERCIAL +51

DR21 - ASPHALT COMMERCIAL +12

DR22 - GRAVEL RESIDENTIAL +02

DR24 - ASPHALT RESIDENTIAL +60

DR25 - ASPHALT RESIDENTIAL+99

DR14 - ASPHALT COMMERCIAL

DR15 - ASPHALT +98 COMMERCIAL

DR17 - ASPHALT +41 COMMERCIAL

DR19 - ASPHALT +03 COMMERCIAL

DR 23 - ASPHALT +41 RESIDENTIAL

EX. 14' X 7' BOX CULVERT

EX. 12" (TO REMAIN)

15" TYPE B

18" TYPE B

12" TYPE B

48" TYPE B

PROP. CURB, TYPE 7 (TYP.)

PRIVATE SIGN (DND)

MATCH ELEVATION OF EX. WALK. SEE CROSS SECTION AT STA 462+50 FOR ADDITIONAL DETAIL CONCRETE STEPS TO REMAIN

TRENCH DRAIN, TYPE B WITH STANDARD GATE
UPSTREAM INVERT: 864.33'
DOWNSTREAM INVERT: 864.19'

CONSTRUCTION LIMITS
STA. 463+25.30 ℄ W. MAIN ST.
STA. 72+53.38 ℄ SOUTH LN.

END RESURFACING
STA. 463+24.77
OFF. 48.60 RT

REPLACE DRIVE PAD WITH AGGREGATE AS NEEDED. QUANTITY INCLUDED IN DRIVEWAY ESTIMATED QUANTITIES TABLE.

SOUTH LANE

℄ SOUTH LN.

N 30° 38' 33" E

DOUGLAS D. & REBECCA R. FRIEND
1354 W. MAIN ST.
D08-045280

PROP. 14' X 7' CONDUIT, TYPE A WITH HEADWALL, TYPE B. SEE CULVERT PLANS.

VEROS LLC
1408 W. MAIN ST.
D08-045220

LOCAR REAL ESTATE LLC
1374 W. MAIN ST.
D08-045270

THIRD SAVING & LOAN COMPANY
1314 W. MAIN ST.
D08-045300

JOSEPH T. ZIMMERMAN & ABIGAUL P. GRISBY
1304 W. MAIN ST.
D08-096100

UTILITY LEGEND

S-*	EX. SAN. SEWER
W-*	EX. WATERLINE
G-*	EX. GAS
T-*	EX. TELE
TR-*	EX. TRAFFIC
FO-*	EX. FIBER OPTIC
DB-*	EX. DUCT BANK
UP-*	EX. UTILITY POLE
E-*	EX. UG ELECTRIC

* UTILITY DISPOSITION

TR	TO REMAIN
TBRO	TO BE RELOCATED BY OTHERS
DND	DO NOT DISTURB
AB	ABANDONED
TBA	TO BE ABANDONED

LEGEND

FULL DEPTH PAVEMENT

PLANING AND OVERLAY

1 EX. LANDSCAPING (MINIMIZE DISTURBANCE) SEE NOTE ON SHEET 10.

2 SAWCUT LINE

NOTES

A. SAWCUT EXTENTS SHOWN ON THE PLAN AND PROFILE SHEETS REPRESENT REQUIRED PAVEMENT WORK ONLY. PAVEMENT QUANTITIES AND REMOVALS DUE TO STORM SEWER AND WATER WORK ARE SHOWN ON SHEET 9.

B. ALL STATION AND OFFSETS ARE WITH RESPECT TO ℄ W. MAIN ST. UNLESS MARKED OTHERWISE.

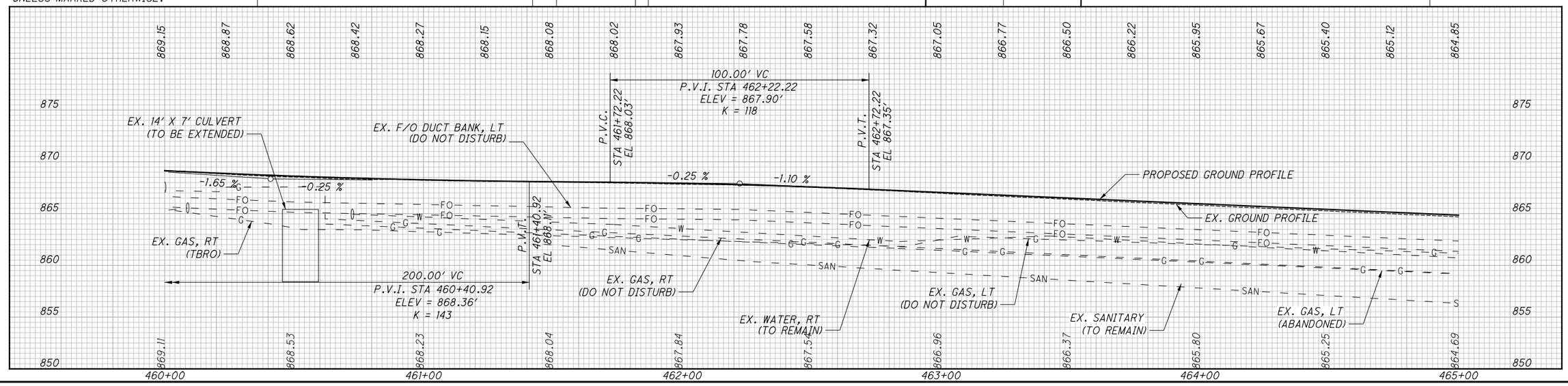

HORIZONTAL SCALE IN FEET
0 10 20 40

CALCULATED ATW
CHECKED JCH

PLAN AND PROFILE-STA 460+00 TO STA 465+00 WEST MAIN STREET (SR 41)

MIA-41-10.32

43
194

10/1/2021 4:38:05 PM Allisonw

S:\CIN\4300-4399\4354\004\Drawings\CAD\110253\roadway\sheets\110253GP005.dgn

PAMELA D. STOVER & MARY BETH MOORE TRUSTEES
1301 W. MAIN ST.
D08-098460

WESTBROOK LANE
N 30° 38' 33" E
℄ WESTBROOK LN.

SCHERRE H. MUMPOWER
1265 W. MAIN ST.
D08-097140

JERRY L. & DEBRA N. STICHER
1259 W. MAIN ST.
D08-097180

TRAFLGAR CORPORATION
1251 W. MAIN ST.
D08-097200

TRAFLGAR CORPORATION
1245 W. MAIN ST.
D08-059155

TRAFLGAR CORPORATION
1241 W. MAIN ST.
D08-026800

ALFRED E. & DESERIA L. LEWIS
1237 W. MAIN ST.
D08-026790

END RESURFACING
STA. 466+37.46
OFF. 47.35' LT

STA. 466+37.55 ℄ W. MAIN ST.
STA. 80+00.00 ℄ WESTBROOK LN.

CONSTRUCTION LIMITS

LANDSCAPING AND WALL (DND)

MATCH EX. ELEV. AT BACK OF WALK
0.50% CROSS SLOPE OF WALK AND OF TREE LAWN

DR28 - GRAVEL RESIDENTIAL +74

DR30 - GRAVEL RESIDENTIAL +98

DR32 - ASPHALT RESIDENTIAL +66

DR33 - CONCRETE RESIDENTIAL +28

DR36 - CONCRETE RESIDENTIAL +79

DRIVE PAD (DND)

18" TYPE B

15" TYPE B

12" TYPE B

24" TYPE B

PROP. LIGHT POLE (TYP.)

W. MAIN STREET

℄ W. MAIN ST.

S 59° 14' 51" E

90°06'

B-008-0-19

B-009-0-19

MATCHLINE STA 465+00 SEE SHEET 43

MATCHLINE STA 470+00 SEE SHEET 45

JEAN BISHOP
1302 W. MAIN ST.
D08-096160

DR26 - ASPHALT +78 RESIDENTIAL

DR27 - ASPHALT +60 RESIDENTIAL

DR29 - ASPHALT +97 RESIDENTIAL

DR31 - ASPHALT RESIDENTIAL +47

DR34 - ASPHALT RESIDENTIAL +30

DR35 - ASPHALT RESIDENTIAL +59

EX. LBC (TO REMAIN)

CONSTRUCTION LIMITS

EX. WALK DND

CODY M SEVERT
1296 W. MAIN ST.
D08-096200

PAULD D. & ALEXIS M. WICK
1262 W. MAIN ST.
D08-096120

MARK T. & VIVIAN I. DAUGHENBAUGH
1240 W. MAIN ST.
D08-096140

KEENETH TEBBE & JANELL TEBBE
1238 W. MAIN ST.
D08-096080

LEONARD T. & KATHY CLARK
1234 W. MAIN ST.
D08-096060

UTILITY LEGEND

S-*	EX. SAN. SEWER
W-*	EX. WATERLINE
G-*	EX. GAS
T-*	EX. TELE
TR-*	EX. TRAFFIC
FO-*	EX. FIBER OPTIC
DB-*	EX. DUCT BANK
UP-*	EX. UTILITY POLE
E-*	EX. UG ELECTRIC

* UTILITY DISPOSITION

TR	TO REMAIN
TBRO	TO BE RELOCATED BY OTHERS
DND	DO NOT DISTURB
AB	ABANDONED
TBA	TO BE ABANDONED

LEGEND

- FULL DEPTH PAVEMENT
- PLANING AND OVERLAY
- [1] EX. LANDSCAPING (MINIMIZE DISTURBANCE) SEE NOTE ON SHEET 10.
- [2] SAWCUT LINE

NOTES

A. SAWCUT EXTENTS SHOWN ON THE PLAN AND PROFILE SHEETS REPRESENT REQUIRED PAVEMENT WORK ONLY. PAVEMENT QUANTITIES AND REMOVALS DUE TO STORM SEWER AND WATER WORK ARE SHOWN ON SHEET 9.

B. ALL STATION AND OFFSETS ARE WITH RESPECT TO ℄ W. MAIN ST. UNLESS MARKED OTHERWISE.

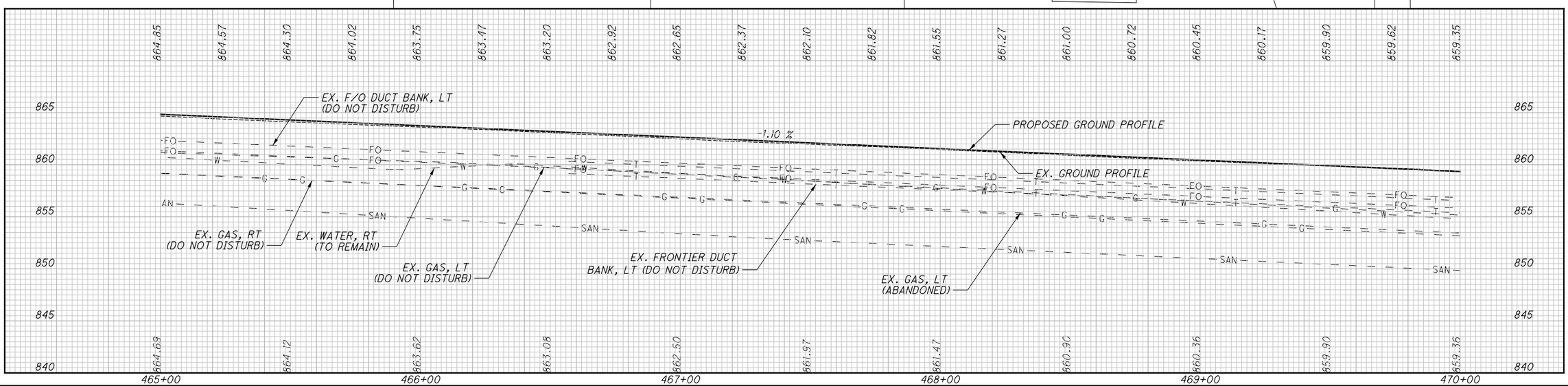

HORIZONTAL SCALE IN FEET
0 10 20 40

CALCULATED ATW
CHECKED JCH

PLAN AND PROFILE-STA 465+00 TO STA 470+00 WEST MAIN STREET (SR 41)

MIA-41-10.32

44
194

10/1/2021 4:38:06 PM Allisonw
S:\CIN\4300-4399\4354\004\Drawings\CAD\110253\roadway\sheets\110253GP006.dgn

ALFRED E. & DESERIA L. LEWIS
1237 W. MAIN ST.
D08-026790

STINA M. MANGAS
1233 W. MAIN ST.
D08-026780

WAGNER WRIGHT HUSKEY
1229 W. MAIN ST.
D08-026770

ROBERT EDWARD LONG III
1225 W. MAIN ST.
D08-026760

KIMBERLY MISHLER, TRUSTEE
1221 W. MAIN ST.
D08-026750

SEAJAY OHIO LLC
1211 W. MAIN ST.
D08-091500

TIMOTHY E. & TRACY A. ARTZ
1194 W. MAIN ST.
D08-091520

E. JOSEPH LOWE M.D. TRUSTEE
1151 W. MAIN ST.
D08-026740

LEONARD T. & KATHY CLARK
1234 W. MAIN ST.
D08-096060

JERRY L. WAGES & KRISTANN OTT
1220 W. MAIN ST.
D08-095980

RAYMOND L. & PATRICIA A. WIDENER
11212 W. MAIN ST.
D08-096000

SUSAN LENTZ FOGT
1204 W. MAIN ST.
D08-037910

BOARD OF PARK COMMISSIONERS OF MIAMI COUNTY, OHIO
W. MAIN ST.
D08-250370

W. MAIN STREET

MATCHLINE STA 470+00 SEE SHEET 44

MATCHLINE STA 475+00 SEE SHEET 46

CONSTRUCTION LIMITS

DR37 - CONCRETE RESIDENTIAL +30

DR38 - CONCRETE RESIDENTIAL +78

DR40 - CONCRETE COMMERCIAL +30

DR41 - CONCRETE RESIDENTIAL +78

DR43 - ASPHALT COMMERCIAL +63

DR46 - ASPHALT RESIDENTIAL +85

DR47 - ASPHALT RESIDENTIAL +84

DR39 - ASPHALT +18 RESIDENTIAL

DR42 - CONCRETE +04 RESIDENTIAL

DR44 - CONCRETE +07 RESIDENTIAL

DR45 - CONCRETE +60 RESIDENTIAL

DR48 - ASPHALT +87 COMMERCIAL

FLAG POLE (DND)

TRANSFORMER (TO REMAIN)

TREE (DND)

PROP. LIGHT POLE (TYP.)

LANDSCAPING BLOCKS

LANDSCAPING BLOCKS (REMOVE AND RESET)

LANDSCAPING WALL (TYP.)

DND EXISTING TREES. SEE CROSS SECTION AT STA 474+00 FOR ADDITIONAL DETAIL

DND EXISTING TREE. SEE CROSS SECTION AT STA 473+50 FOR ADDITIONAL DETAIL

18" TYPE B

24" TYPE B

30" TYPE B

PROP. 12" STORM

S 59° 14' 51" E

S 60° 37' 22" E

S 59° 46' 57" E

B-010-0-19

UTILITY LEGEND	
S-*	EX. SAN. SEWER
W-*	EX. WATERLINE
G-*	EX. GAS
T-*	EX. TELE
TR-*	EX. TRAFFIC
FO-*	EX. FIBER OPTIC
DB-*	EX. DUCT BANK
UP-*	EX. UTILITY POLE
E-*	EX. UG ELECTRIC

* UTILITY DISPOSITION

TR	TO REMAIN
TBRO	TO BE RELOCATED BY OTHERS
DND	DO NOT DISTURB
AB	ABANDONED
TBA	TO BE ABANDONED

LEGEND

FULL DEPTH PAVEMENT

PLANING AND OVERLAY

1 EX. LANDSCAPING (MINIMIZE DISTURBANCE) SEE NOTE ON SHEET 10.

2 SAWCUT LINE

NOTES

A. SAWCUT EXTENTS SHOWN ON THE PLAN AND PROFILE SHEETS REPRESENT REQUIRED PAVEMENT WORK ONLY. PAVEMENT QUANTITIES AND REMOVALS DUE TO STORM SEWER AND WATER WORK ARE SHOWN ON SHEET 9.

B. ALL STATION AND OFFSETS ARE WITH RESPECT TO ℄ W. MAIN ST. UNLESS MARKED OTHERWISE.

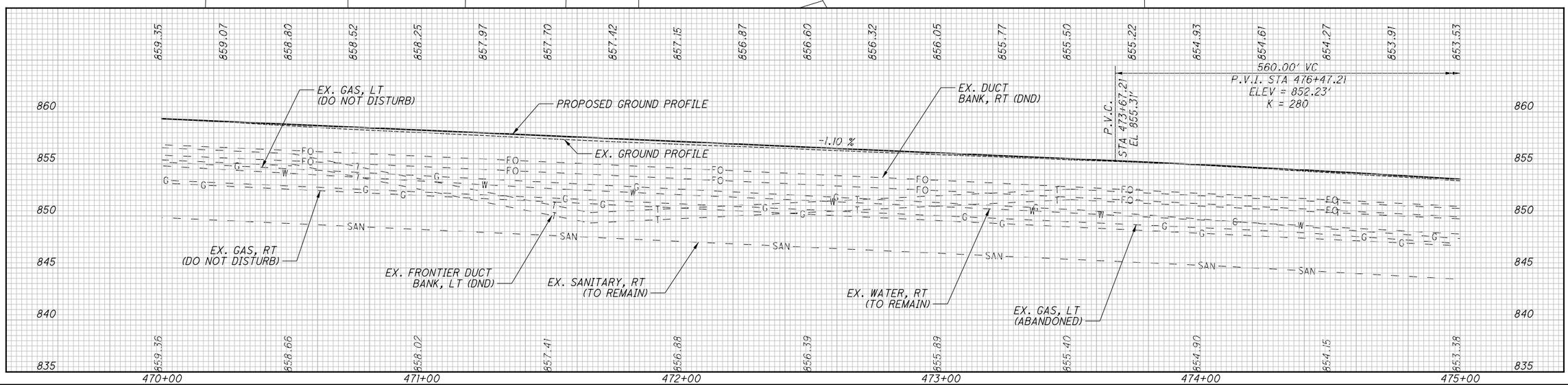

HORIZONTAL SCALE IN FEET
0 10 20 40

CALCULATED ATW
CHECKED JCH

PLAN AND PROFILE-STA 470+00 TO STA 475+00
WEST MAIN STREET (SR 41)

MIA-41-10.32

45
196

10/1/2021 4:38:07 PM Allison
S:\CIN\4300-4399\4354\004\Drawings\CAD\110253\roadway\sheets\110253GP007.dgn

E. JOSEPH LOWE M.D. TRUSTEE
1151 W. MAIN ST.
D08-026740

E. JOSEPH LOWE M.D. TRUSTEE
1151 W. MAIN ST.
D08-098180

E. JOSEPH LOWE M.D. TRUSTEE
1151 W. MAIN ST.
D08-026730

JOSHUA L. & EVELYN MILLER
1141 W. MAIN ST.
D08-098100

ROD E. DRAKE
6 TAMPLIN DR.
D08-033280

DANIEL J. ANTHONY
1137 W. MAIN ST.
D08-033290

R C HEMM INVESTMENTS LLC
1133 W. MAIN ST.
D08-102044

KATHRYN L ROETTER
1164 W. MAIN ST.
D08-037940

BOARD OF PARK COMMISSIONERS
OF MIAMI COUNTY, OHIO
W. MAIN ST.
D08-250370

COLONY PARK DRIVE CONDO ASSOCIATES
W. MAIN ST.
D08-091620

CRON-CHENEY FUNERAL HOMES INC.
1124 W. MAIN ST.
D08-091560

UTILITY LEGEND

S-*	EX. SAN. SEWER
W-*	EX. WATERLINE
G-*	EX. GAS
T-*	EX. TELE
TR-*	EX. TRAFFIC
FO-*	EX. FIBER OPTIC
DB-*	EX. DUCT BANK
UP-*	EX. UTILITY POLE
E-*	EX. UG ELECTRIC

*** UTILITY DISPOSITION**

TR	TO REMAIN
TBRO	TO BE RELOCATED BY OTHERS
DND	DO NOT DISTURB
AB	ABANDONED
TBA	TO BE ABANDONED

LEGEND

FULL DEPTH PAVEMENT

PLANING AND OVERLAY

[1] EX. LANDSCAPING (MINIMIZE DISTURBANCE) SEE NOTE ON SHEET 10.

[2] SAWCUT LINE

NOTES

A. SAWCUT EXTENTS SHOWN ON THE PLAN AND PROFILE SHEETS REPRESENT REQUIRED PAVEMENT WORK ONLY. PAVEMENT QUANTITIES AND REMOVALS DUE TO STORM SEWER AND WATER WORK ARE SHOWN ON SHEET 9.

B. ALL STATION AND OFFSETS ARE WITH RESPECT TO ℄ W. MAIN ST. UNLESS MARKED OTHERWISE.

MATCHLINE STA 475+00 SEE SHEET 45

MATCHLINE STA 480+00 SEE SHEET 47

W. MAIN STREET

℄ W. MAIN ST.

S 59° 46' 57" E

S 59° 16' 41" E

STA. 477+43.16 ℄ W. MAIN ST.
STA. 91+17.13 ℄ COLONY PARK DR.

STA. 479+25.77
OFF. 49.95' LT

STA. 479+67.48

STA. 479+28.55 ℄ W. MAIN ST.
STA. 100+00.00 ℄ TAMPLIN DR.

PC STA. 90+34.21

PT STA. 90+00.00

N 8° 08' 13" E

90° 00' 00"

86° 49' 13"

N 30° 48' 13" E

℄ COLONY PARK DR.

℄ TAMPLIN DRIVE

℄ TAMPLIN DR.

CONSTRUCTION LIMITS

PROP. LIGHT POLE (TYP.)

DR49 - ASPHALT RESIDENTIAL +07

D51 - GRAVEL RESIDENTIAL +04

D52 - ASPHALT RESIDENTIAL +25

D50 - CONCRETE +60 RESIDENTIAL

D53 - ASPHALT COMMERCIAL +78

D54 - ASPHALT COMMERCIAL +83

30" TYPE B

36" TYPE B

15" TYPE B

12" TYPE B

B-QU-0-19

LANDSCAPING BLOCKS (REMOVE AND RESET)

EX. BOULDERS (TO REMAIN)

DND EXISTING TREES. SEE CROSS SECTION AT STA 475+50 FOR ADDITIONAL DETAIL

LANDSCAPING BLOCKS (REMOVE AND RESET)

END RESURFACING
STA. 477+43.93
OFF. 52.91' RT

EX. PAVER SIDEWALK REMOVE AND RESTORE (SEE INTERSECTION DETAIL SHEET .)

PRIVATE LANDSCAPING (DND)

PRIVATE SIGN (DND)

EDGE OF PARKING LOT (DND)

END RESURFACING
STA. 479+25.77
OFF. 49.95' LT

E-TBRO
G-TBRO
(GAS REGULATOR STATION)

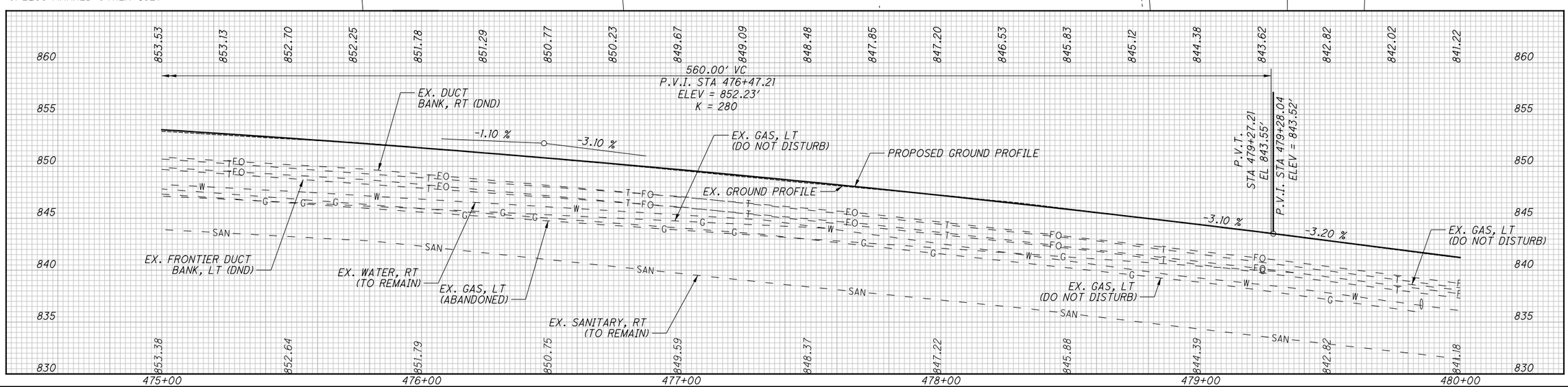

HORIZONTAL SCALE IN FEET
0 10 20 40

CALCULATED ATW
CHECKED JCH

PLAN AND PROFILE-STA 475+00 TO STA 480+00
WEST MAIN STREET (SR 41)

MIA-41-10.32

46
194

10/1/2021 4:38:08 PM Allison

S:\CIN\4300-4399\4354\004\Drawings\CAD\110253\roadway\sheets\110253GP008.dgn

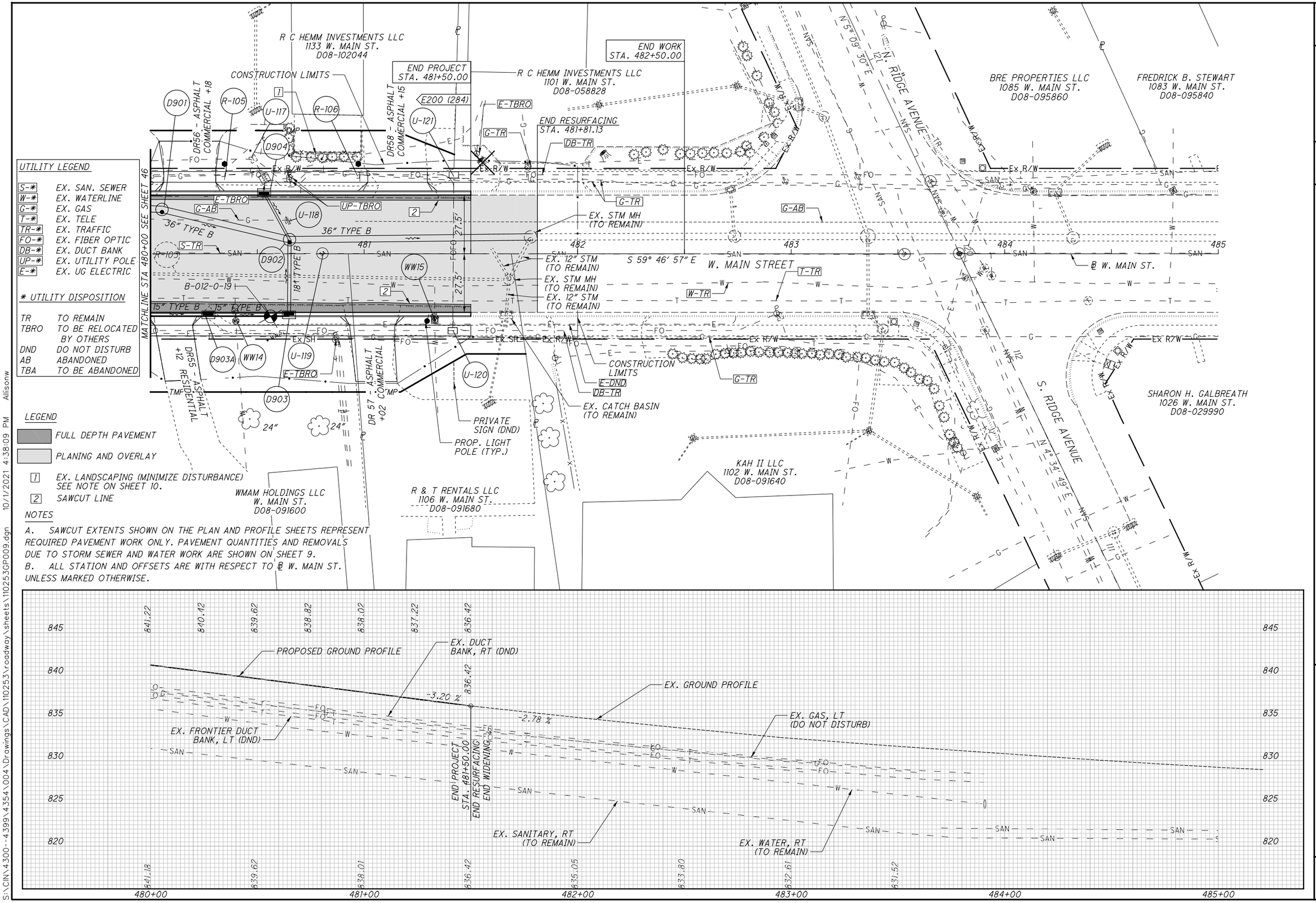

S:\CIN\4300-4399\4354\004\Drawings\CAD\110253\roadway\sheets\110253GP009.dgn 10/1/2021 4:38:09 PM Allisonw

HORIZONTAL SCALE IN FEET
0 10 20 40

CALCULATED ATW
CHECKED JCH

PLAN AND PROFILE-STA 480+00 TO STA 485+00 WEST MAIN STREET (SR 41)

MIA-41-10.32

SEEDING	
END WIDTH	SQ. YDS.

℄ W. MAIN ST.

ITEM 204 - EXCAVATION OF UNSUITABLE SUBGRADE (12" DEEP)

TMP
EX R/W
EX. 12" STORM
1.18%
2.08%
4.17%
1.56%
4:1
886.19
PROP. LIGHTING CONDUIT
888.37
443+00.00
888.42

TMP
EX R/W
EX R/W
EX R/W
EX. 12" STORM
1.33%
2.08%
4.17%
1.56%
4:1
3:1
886.75
890.09
442+50.00
890.08

TMP
EX R/W
EX R/W
EX R/W
EX. 12" STORM
1.68%
1.82%
3.34%
3.62%
4:1
3:1
887.05
891.47
442+14.95
891.47
BEGIN PROJECT
STA. 442+14.95

EX R/W
EX. 12" STORM
EX. 12" STORM
887.27
442+00.00
892.11
BEGIN WORK

60 50 40 30 20 10 0 10 20 30 40 50 60

END AREA		VOLUME	
CUT	FILL	CUT	FILL
7.1	7		
		13	19
6.6	13		
		6	12
0	0		
14	20	19	31

CALCULATED JTO
CHECKED JCH

CROSS SECTIONS W. MAIN ST. (SR 41)
STA. 442+00.00 TO STA. 443+00.00

MIA-41-10.32

48
194

S:\CIN\4300--4399\4354\004\Drawings\CAD\110253\roadway\sheets\10253XS001.dgn 10/1/2021 4:38:10 PM Allisonw

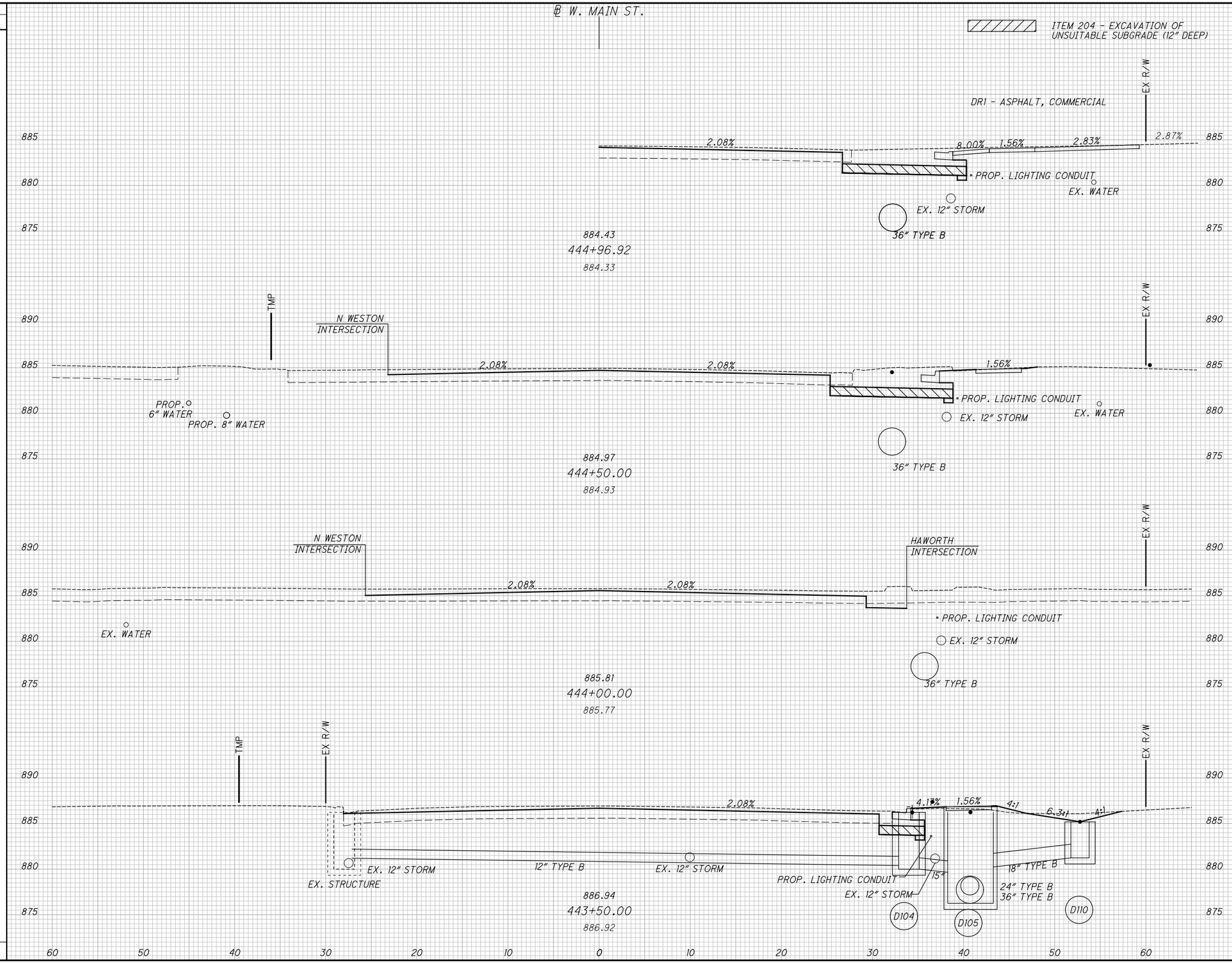

SEEDING	
END WIDTH	SQ. YDS.

END AREA	
CUT	FILL
24.8	0
0	0
5.1	1.7
30	2

VOLUME	
CUT	FILL
23	0
5	2
11	8
39	10

CALCULATED JTO
CHECKED JCH

CROSS SECTIONS W. MAIN ST. (SR 41)
STA. 443+50.00 TO STA. 444+96.92

MIA-41-10.32

49
194

S:\CIN\4300--4399\4354\004\Drawings\CAD\110253\roadway\sheets\10253XS001.dgn 10/1/2021 4:38:11 PM Alisonw

SEEDING	
END WIDTH	SQ. YDS.

℄ W. MAIN ST.

ITEM 204 - EXCAVATION OF UNSUITABLE SUBGRADE (12" DEEP)

DR2 - ASPHALT, COMMERCIAL

TMP

EX R/W

2.11% 8.00% 1.56% 4.11%

PROP. LIGHTING CONDUIT

EX. 3" GAS

EX. WATER

EX. 4" GAS

EX. 12" STORM

PROP. 36" STORM

883.57
445+84.06
883.56

EX. UNDERGROUND ELECTRIC (DND), STA. 445+70
EXCAVATION OF SUBGRADE AND GRANULAR MATERIAL
SHALL BE OMITTED WITHIN 10' OF EXISTING ELECTRIC.

48:1 2.08% 4.17% 2.08% 2.08% 4.17% 1.56% 4:1

EX. WATER (TBA)

PROP. 8" WATER

D201

36" TYPE B

PROP. LIGHTING CONDUIT

EX. 12" STORM

12" TYPE B

EX. WATER

883.87
445+50.00
883.81

1.56% 4.17% 2.08% 2.08% 8.00% 1.56% 3.01%

EX. WATER (TBA)

PROP. 8" WATER

884.39
445+00.00
884.29

885 880 875 870 890

60 50 40 30 20 10 0 10 20 30 40 50 60

END AREA		VOLUME	
CUT	FILL	CUT	FILL
36.7	1.1		
		59	1
27.4	0.5		
		48	0.5
64	2	107	2

CALCULATED JTO
CHECKED JCH

CROSS SECTIONS W. MAIN ST. (SR 41)
STA. 445+00.00 TO STA. 445+84.06

MIA-41-10.32

50
194

S:\CIN\4300-4399\4354\004\Drawings\CAD\110253\roadway\sheets\10253XS001.dgn 10/1/2021 4:38:12 PM Allisonw

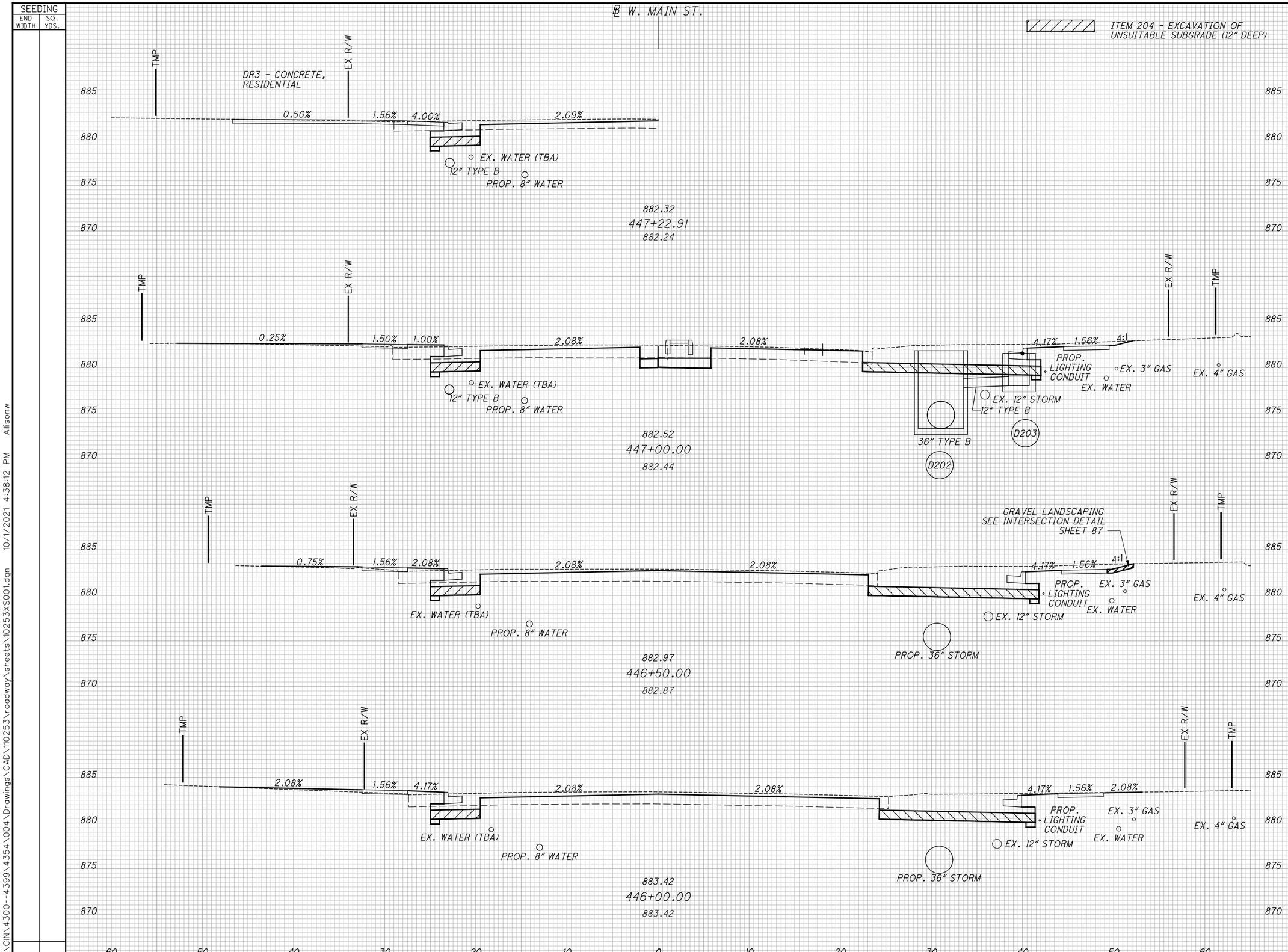

END AREA CUT	END AREA FILL	VOLUME CUT	VOLUME FILL
44.3	2.8		
		85	5
48	2.1		
		78	5
33.8	3.4		
		65	4
96	8	228	14

CALCULATED JTO
CHECKED JCH

CROSS SECTIONS W. MAIN ST. (SR 41)
STA. 446+00.00 TO STA. 447+22.91

MIA-41-10.32

S:\CIN\4300--4399\4354\004\Drawings\CAD\110253\roadway\sheets\10253XS001.dgn 10/1/2021 4:38:12 PM Allisonw

SEEDING	
END WIDTH	SQ. YDS.

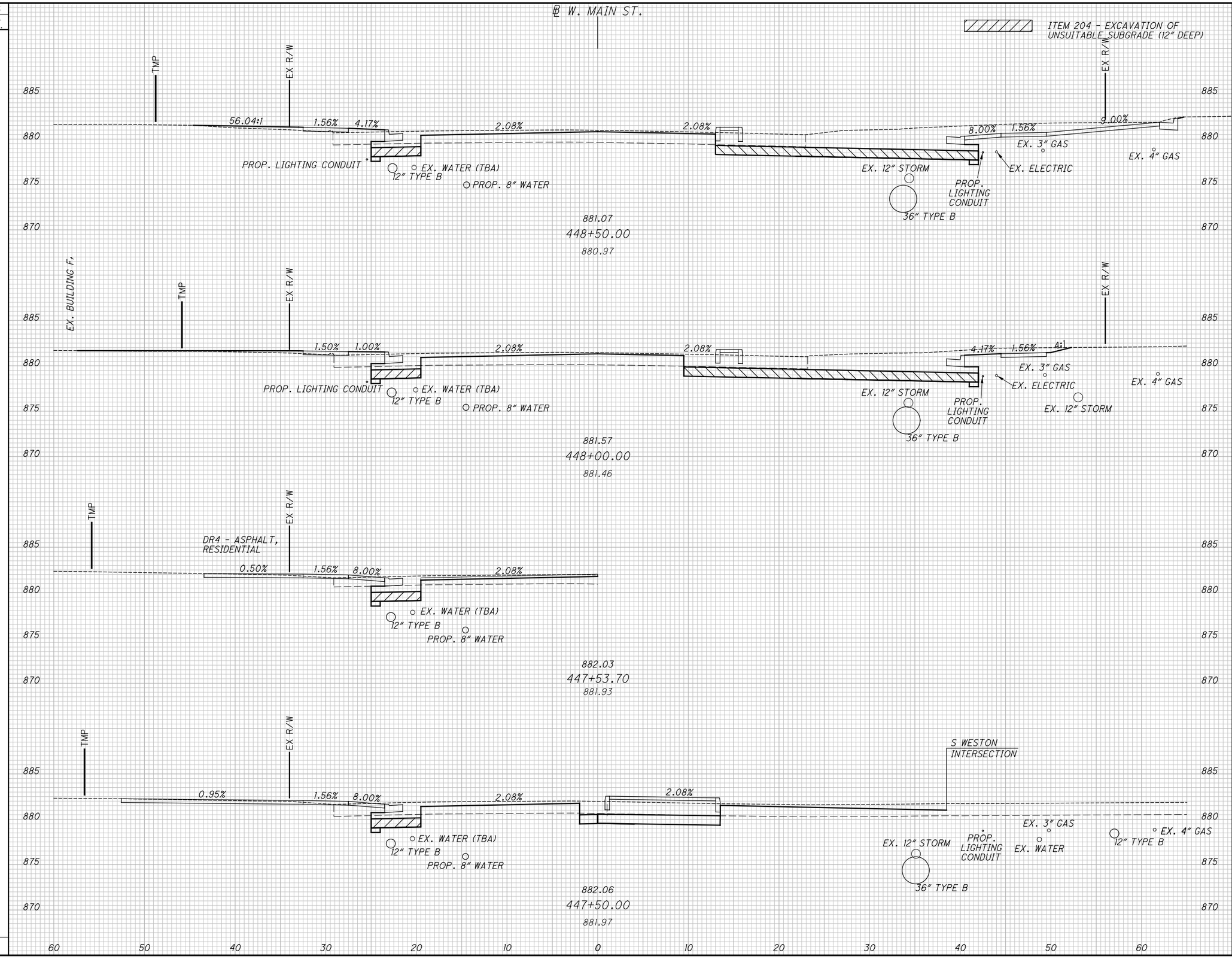

END AREA	
CUT	FILL
57.1	3.9
44.1	3
1.7	0
103	7

VOLUME	
CUT	FILL
94	6
42	3
43	3
179	12

CALCULATED JTO
CHECKED JCH

CROSS SECTIONS W. MAIN ST. (SR 41) STA. 447+50.00 TO STA. 448+50.00

MIA-41-10.32

52
194

S:\CIN\4300-4399\4354\004\Drawings\CAD\110253\roadway\sheets\10253XS001.dgn 10/1/2021 4:38:13 PM Allisonw

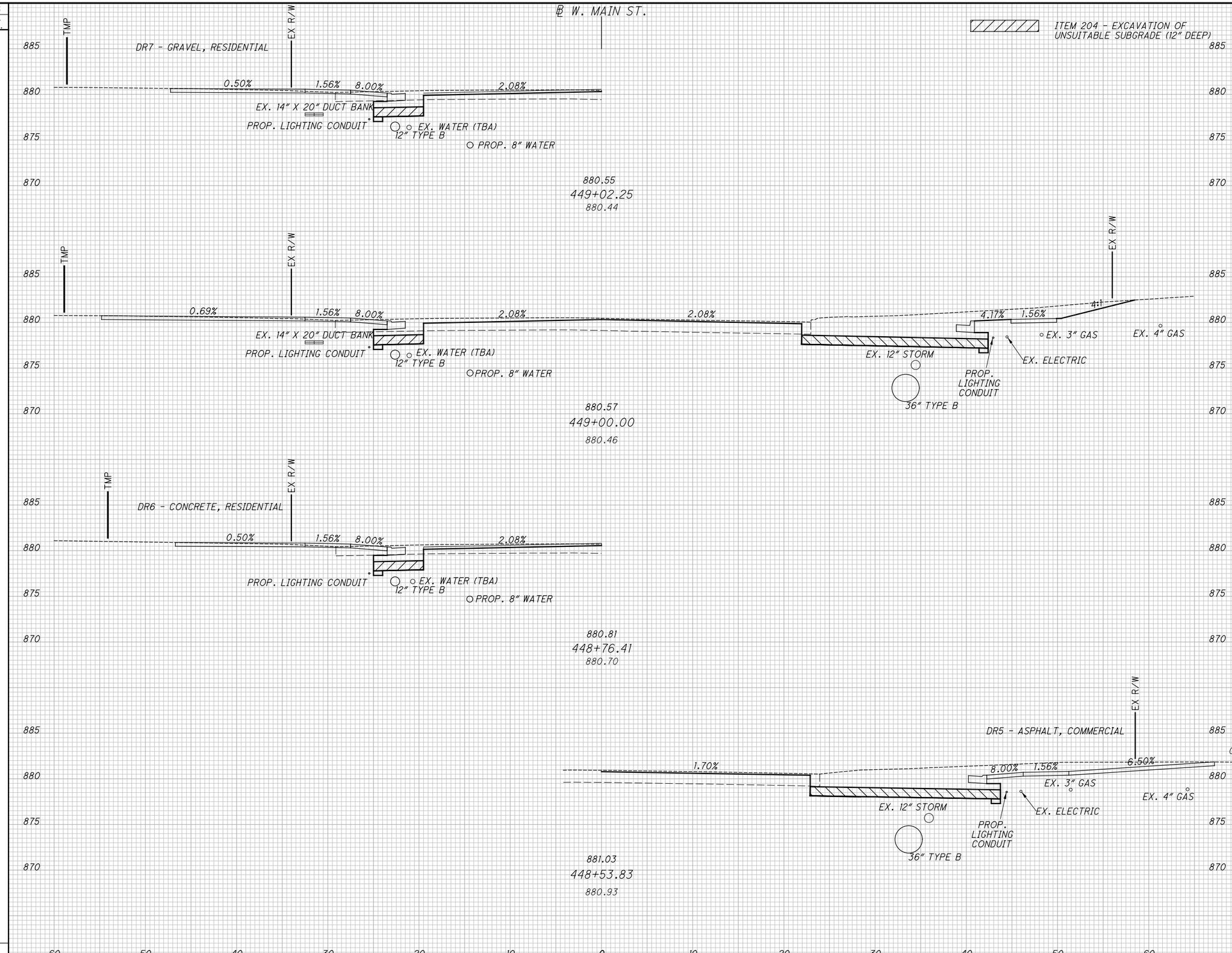

SEEDING END WIDTH	SEEDING SQ. YDS.	END AREA CUT	END AREA FILL	VOLUME CUT	VOLUME FILL
		66.1	0		
				114	4
		66	0	114	4

CALCULATED JTO
CHECKED JCH

CROSS SECTIONS W. MAIN ST. (SR 41)
STA. 448+53.83 TO STA. 449+02.25

MIA-41-10.32

S:\CIN\4300--4399\4354\004\Drawings\CAD\110253\roadway\sheets\10253XS001.dgn 10/1/2021 4:38:14 PM Allisonw

SEEDING	
END WIDTH	SQ. YDS.

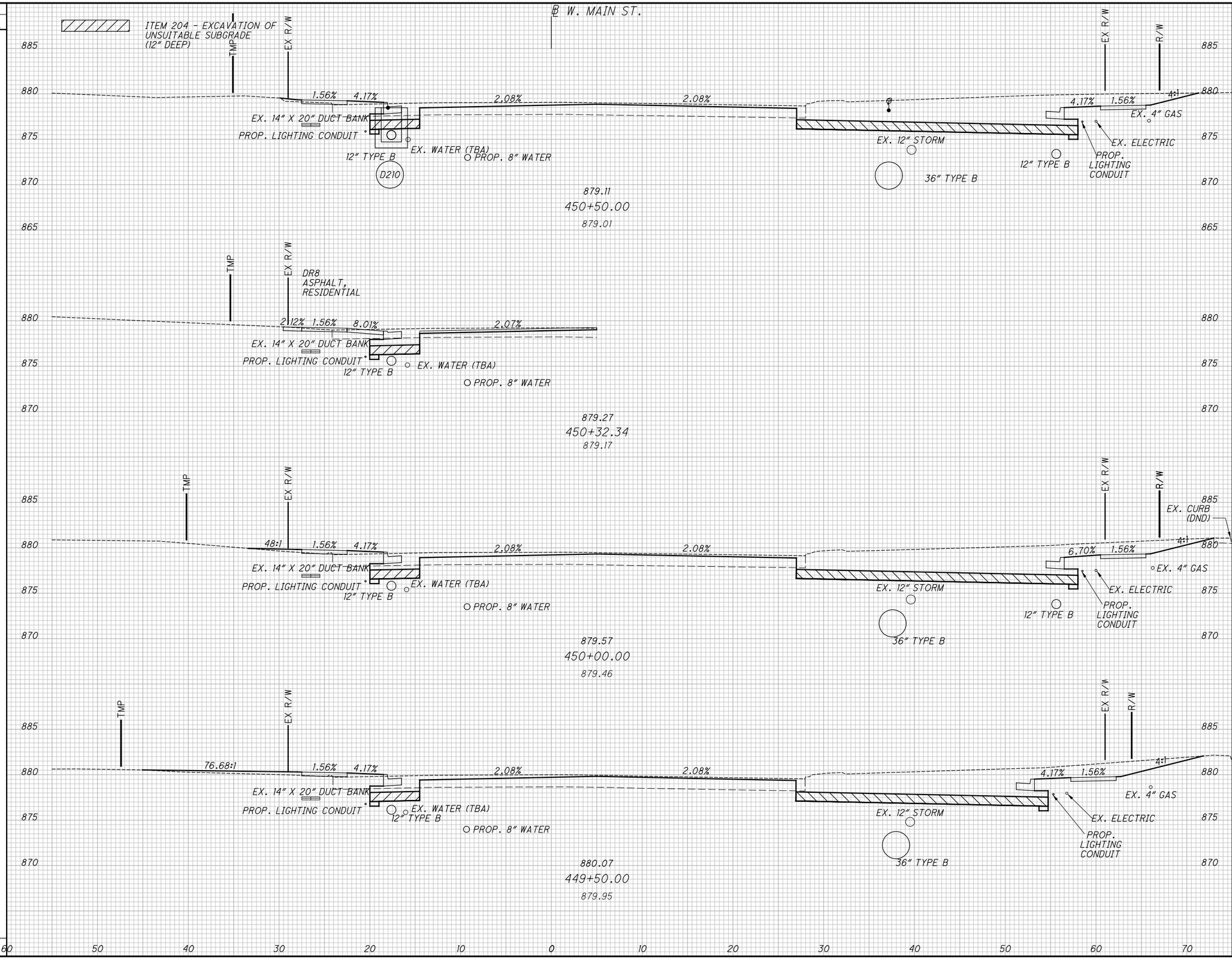

END AREA		VOLUME	
CUT	FILL	CUT	FILL
96.8	1.6		
		181	4
98.8	2.2		
		174	7
88.8	5.2		
		143	5
284	9	498	16

CALCULATED JTO
CHECKED JCH

CROSS SECTIONS W. MAIN ST. (SR 41)
STA. 449+50.00 TO STA. 450+50.00

MIA-41-10.32

54
194

S:\CIN\4300--4399\4354\004\Drawings\CAD\110253\roadway\sheets\10253XS001.dgn 10/1/2021 4:38:15 PM Allisonw

SEEDING	
END WIDTH	SQ. YDS.

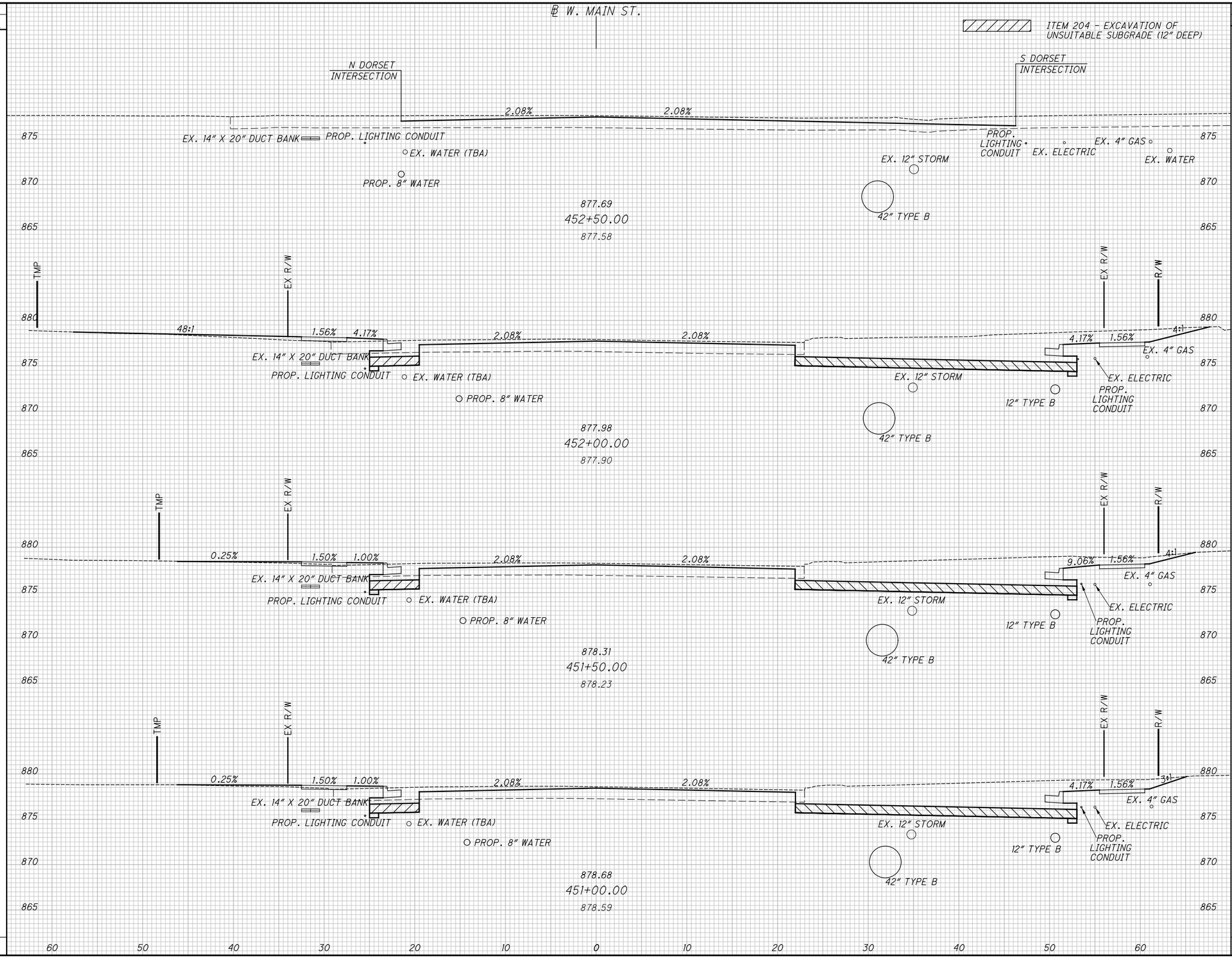

END AREA	
CUT	FILL
0	0
96.2	4.8
89.9	1.9
89.6	2.6
276	9

VOLUME	
CUT	FILL
89	4
172	6
166	4
173	4
600	18

CALCULATED JTO
CHECKED JCH

CROSS SECTIONS W. MAIN ST. (SR 41) STA. 451+00.00 TO STA. 452+50.00

MIA-41-10.32

55
194

S:\CIN\4300-4399\4354\004\Drawings\CAD\110253\roadway\sheets\10253XS001.dgn 10/1/2021 4:38:15 PM Allisonw

SEEDING	
END WIDTH	SQ. YDS.

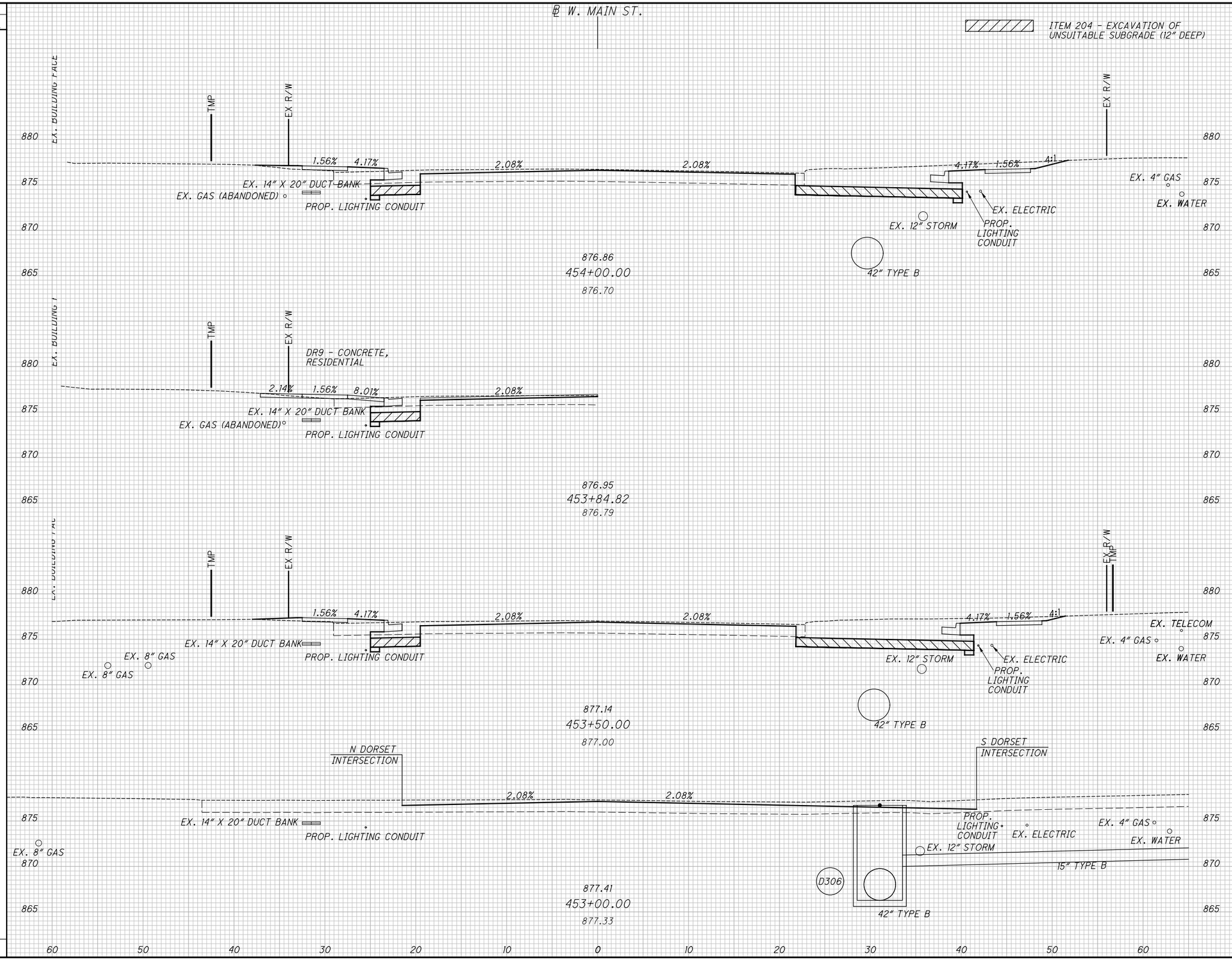

END AREA		VOLUME	
CUT	FILL	CUT	FILL
46.2	3.3		
		86	5
46.3	2.5		
		43	2
0	0		
		0	0
93	6	129	7

CALCULATED JTO
CHECKED JCH

CROSS SECTIONS W. MAIN ST. (SR 41)
STA. 453+00.00 TO STA. 454+00.00

MIA-41-10.32

56
194

S:\CIN\4300--4399\4354\004\Drawings\CAD\110253\roadway\sheets\10253XS001.dgn 10/1/2021 4:38:16 PM Allisonw

SEEDING	
END WIDTH	SQ. YDS.

℄ W. MAIN ST.

ITEM 204 - EXCAVATION OF UNSUITABLE SUBGRADE (12" DEEP)

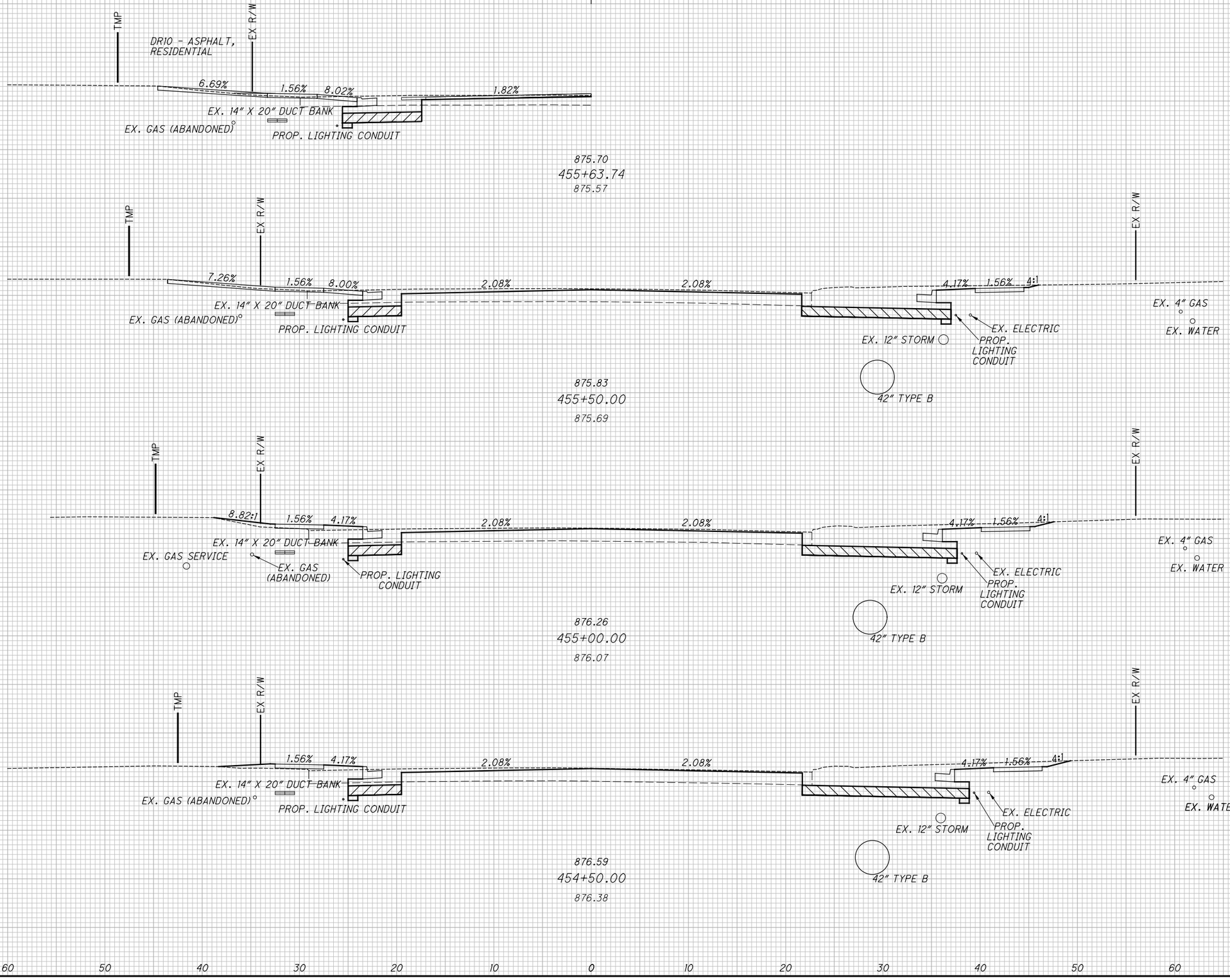

END AREA		VOLUME	
CUT	FILL	CUT	FILL
34.5	0	66	3
36.6	3.6	72	7
40.7	3.5	80	6
112	7	218	16

CALCULATED JTO
CHECKED JCH

CROSS SECTIONS W. MAIN ST. (SR 41)
STA. 454+50.00 TO STA. 455+57.50

MIA-41-10.32

57
194

S:\CIN\4300--4399\4354\004\Drawings\CAD\110253\roadway\sheets\10253XS001.dgn 10/1/2021 4:38:17 PM Allisonw

SEEDING	
END WIDTH	SQ. YDS.

℄ W. MAIN ST.

ITEM 204 - EXCAVATION OF UNSUITABLE SUBGRADE (12" DEEP)

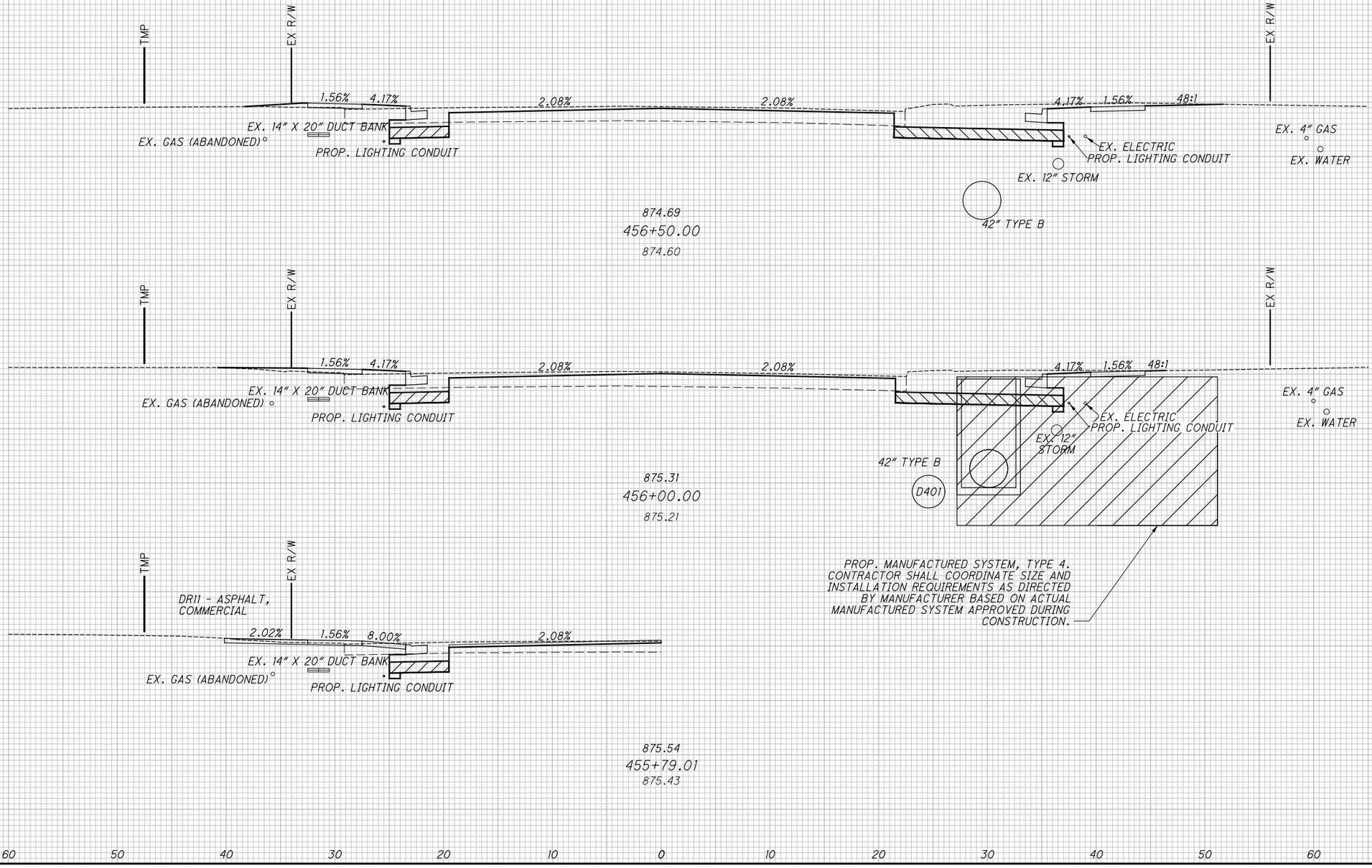

END AREA		VOLUME	
CUT	FILL	CUT	FILL
36.5	2.5		
		65	5
33.2	3		
		63	3
70	6	128	8

CALCULATED JTO
CHECKED JCH

CROSS SECTIONS W. MAIN ST. (SR 41)
STA. 455+79.01 TO STA. 456+50.00

MIA-41-10.32

58
194

S:\CIN\4300-4399\4354\004\Drawings\CAD\110253\roadway\sheets\10253XS001.dgn 10/1/2021 4:38:18 PM Allisonw

SEEDING	
END WIDTH	SQ. YDS.

℄ W. MAIN ST.

ITEM 204 - EXCAVATION OF UNSUITABLE SUBGRADE (12" DEEP)

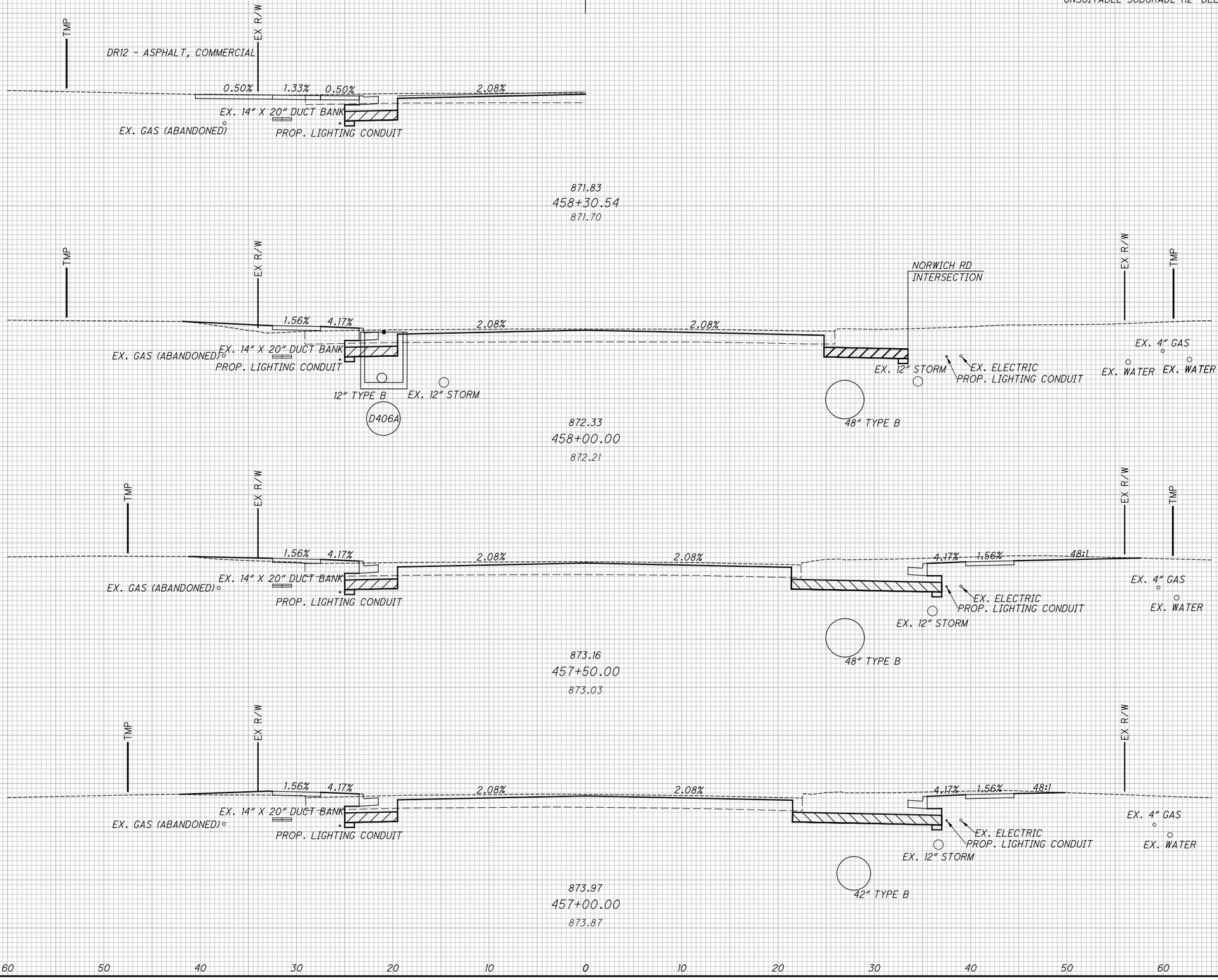

END AREA		VOLUME	
CUT	FILL	CUT	FILL
1.4	5.9		
		40	8
41.5	3.1		
		72	6
36.1	3.8		
		67	6
81	13	179	20

CALCULATED JTO
CHECKED JCH

CROSS SECTIONS W. MAIN ST. (SR 41)
STA. 457+00.00 TO STA. 458+30.54

MIA-41-10.32

59
194

S:\CIN\4300--4399\4354\004\Drawings\CAD\110253\roadway\sheets\10253XS001.dgn 10/1/2021 4:38:18 PM Allisonw

SEEDING	
END WIDTH	SQ. YDS.

ITEM 204 - EXCAVATION OF UNSUITABLE SUBGRADE (12" DEEP)

℄ W. MAIN ST.

END AREA		VOLUME	
CUT	FILL	CUT	FILL
42.8	2.1		
		78	5
41.1	2.8		
		40	3
1.8	0		
		3	5
86	5	121	13

CALCULATED JTO

CHECKED JCH

CROSS SECTIONS W. MAIN ST. (SR 41)
STA. 458+50.00 TO STA. 459+50.00

MIA-41-10.32

60
194

S:\CIN\4300-4399\4354\004\Drawings\CAD\110253\roadway\sheets\10253XS001.dgn 10/1/2021 4:38:19 PM Allisonw

SEEDING	
END WIDTH	SQ. YDS.

℄ W. MAIN ST.

ITEM 204 - EXCAVATION OF UNSUITABLE SUBGRADE (12" DEEP)

EX. 8" GAS
(TO BE RELOCATED BY OTHERS)

EX R/W

SEE CULVERT PLANS

0.92% 2.08% 2.08% 4.17% 1.56%

PROP. LIGHTING CONDUIT
EX. 14" X 20" DUCT BANK
EX. 2" GAS
EX. 14' X 7' BOX CULVERT

868.62
460+50.00
868.53

EX. ELECTRIC
PROP. LIGHTING CONDUIT
EX. GAS (ABANDONED)

870 865 860 855

DR14 - ASPHALT, COMMERCIAL

4.69

2.08% 8.00% 1.56% 10.00%

PROP. LIGHTING CONDUIT
EX. ELECTRIC
EX. 8" GAS
EX. 12" STORM
EX. 8" SANITARY
48" TYPE B

EX. 8" GAS
EX. 12" STORM

869.12
460+02.78
869.08

875 870 865 860

N NORWICH RD
INTERSECTION

2.08% 2.08% 8.00% 1.56% 10.00%

EX. 14" X 20" DUCT BANK
PROP. LIGHTING CONDUIT
EX. GAS (ABANDONED)
EX. 2" GAS
EX. WATER
EX. 12" STORM
EX. 12" STORM
EX. 8" GAS
48" TYPE B

869.15
460+00.00
869.11

875 870 865 860

60 50 40 30 20 10 0 10 20 30 40 50 60

END AREA		VOLUME	
CUT	FILL	CUT	FILL
32	11.4		
		82	11
56.7	0		
		92	2
91	12	174	13

CALCULATED JTO
CHECKED JCH

CROSS SECTIONS W. MAIN ST. (SR 41)
STA. 460+00.00 TO STA. 460+50.00

MIA-41-10.32

61
194

S:\CIN\4300--4399\4354\004\Drawings\CAD\110253\roadway\sheets\10253XS001.dgn 10/1/2021 4:38:20 PM Allisonw

SEEDING	
END WIDTH	SQ. YDS.

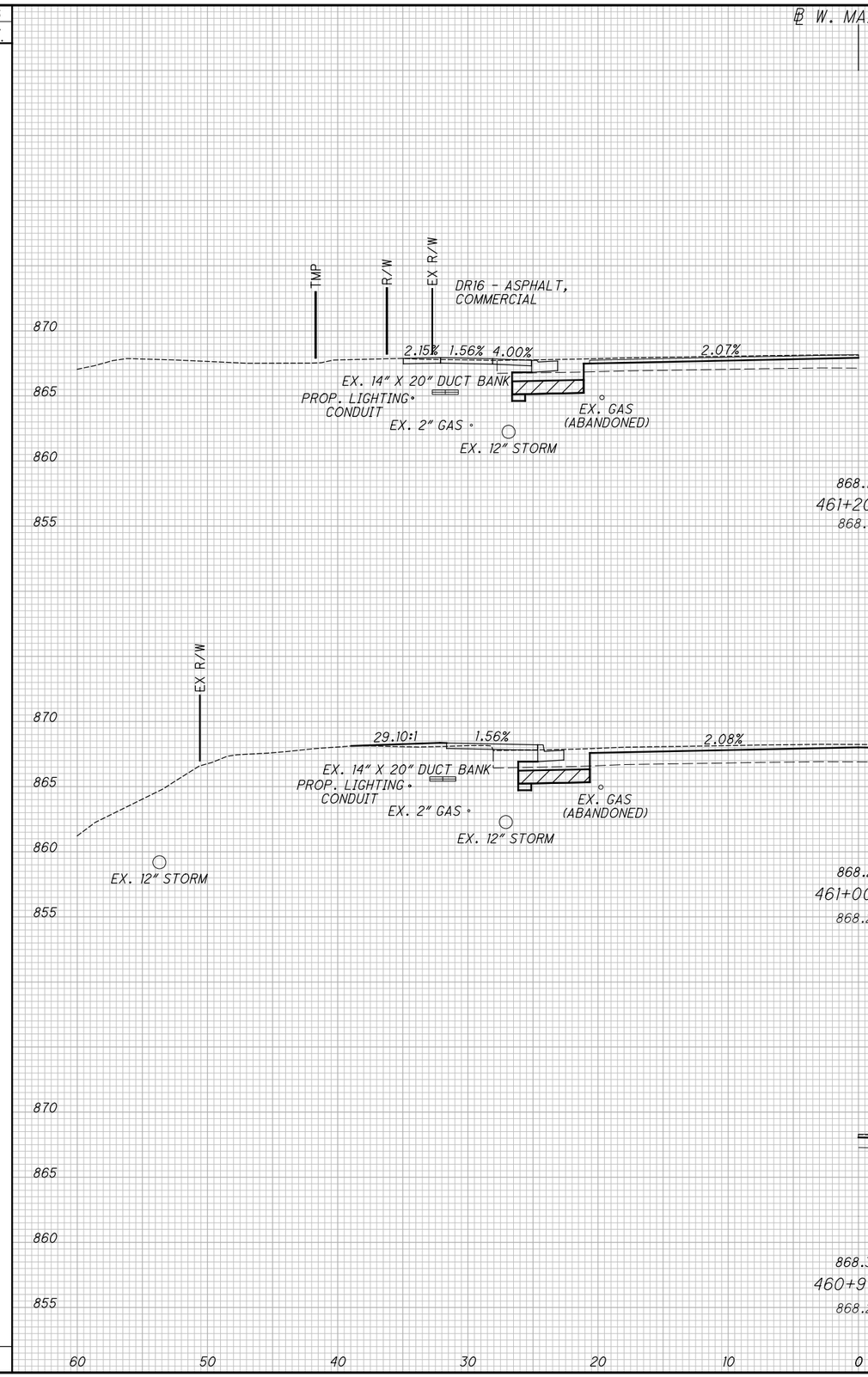

END AREA		VOLUME	
CUT	FILL	CUT	FILL
38	1.2		
		65	12
38	1	65	12

CALCULATED JTO
CHECKED JCH

CROSS SECTIONS W. MAIN ST. (SR 41)
STA. 460+97.69 TO STA. 461+33.08

MIA-41-10.32

62
194

S:\CIN\4300--4399\4354\004\Drawings\CAD\110253\roadway\sheets\10253XS001.dgn 10/1/2021 4:38:21 PM Allisonw

SEEDING	
END WIDTH	SQ. YDS.

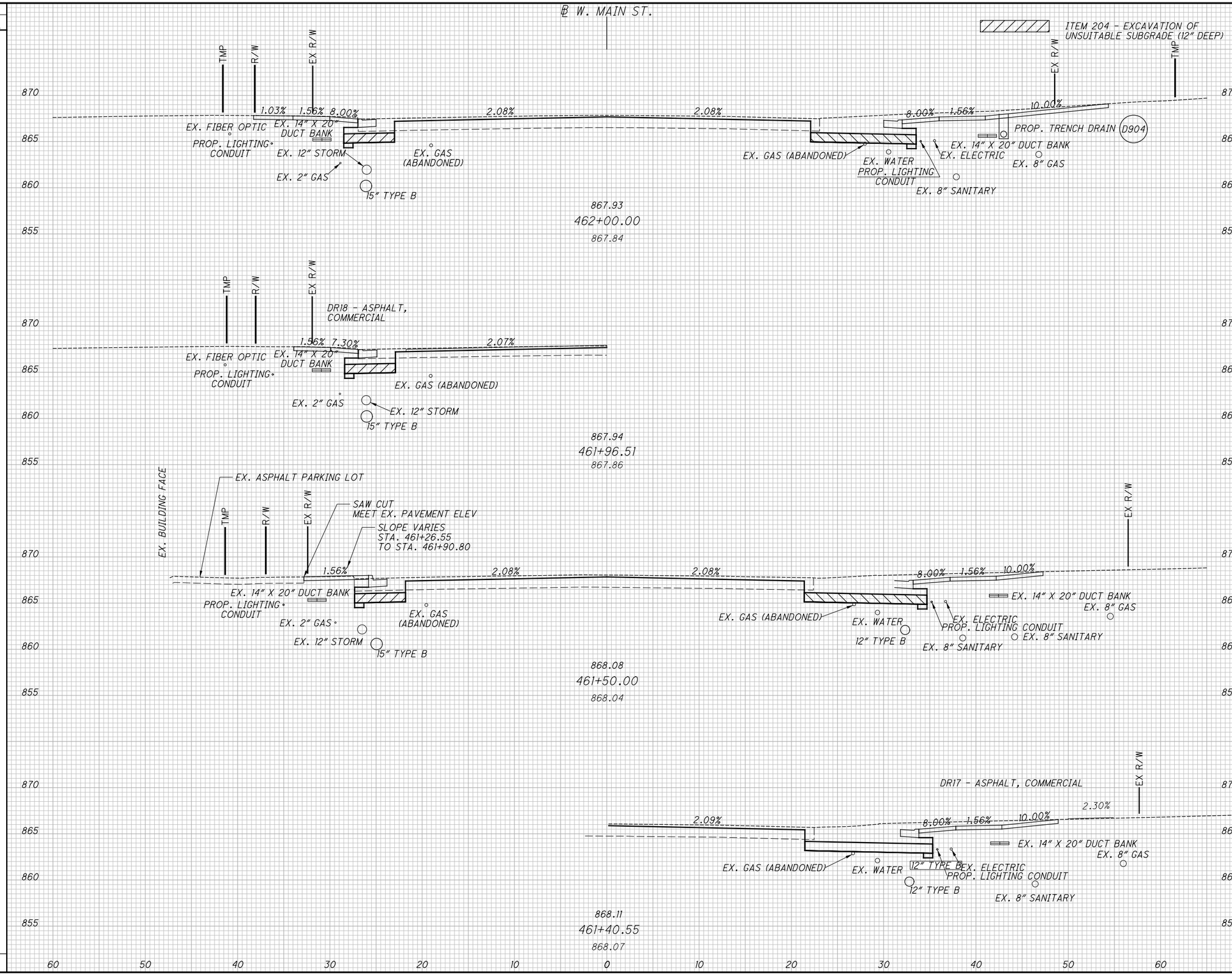

END AREA		VOLUME	
CUT	FILL	CUT	FILL
27.3	0		
		52	0.5
29.4	0.5		
		62	1
57	1	114	2

CALCULATED JTO
CHECKED JCH

CROSS SECTIONS W. MAIN ST. (SR 41)
STA. 461+50.00 TO STA. 462+00.00

MIA-41-10.32

63
194

S:\CIN\4300--4399\4354\004\Drawings\CAD\110253\roadway\sheets\10253XS001.dgn 10/1/2021 4:38:22 PM Allisonw

SEEDING	
END WIDTH	SQ. YDS.

℄ W. MAIN ST.

ITEM 204 - EXCAVATION OF UNSUITABLE SUBGRADE (12" DEEP)

TMP | R/W | EX R/W | D504 | SOUTH LANE INTERSECTION

870 / 865 / 860 / 855

4:1 | 1.56% | 2.08% | 2.08%

EX. 2" FIBER OPTIC | PROP. LIGHTING CONDUIT | EX. 2" GAS | EX. WATER | EX. 14" X 20" DUCT BANK | EX. 12" STORM | 15" TYPE B | 18" TYPE B | EX. GAS (ABANDONED) | EX. 8" SANITARY 867.05 | 463+00.00 | 866.96 | EX. WATER | EX. GAS (ABANDONED) | PROP. LIGHTING CONDUIT | EX. 14" X 20" DUCT BANK | EX. ELECTRIC | EX. 8" GAS | 12" TYPE B

TMP | R/W | EX R/W | DR20 - ASPHALT, COMMERCIAL

5.99% | 1.56% | 7.95% | 2.09%

EX. 2" FIBER OPTIC | PROP. LIGHTING CONDUIT | EX. 14" X 20" DUCT BANK | EX. GAS (ABANDONED) | EX. 2" GAS | EX. GAS (ABANDONED) | EX. 12" STORM | 15" TYPE B | EX. 8" SANITARY 867.53 | 462+51.19 | 867.53

TMP | R/W | EX R/W | EX R/W | TMP | CONCRETE STEPS (TO REMAIN)

5.99% | 8.00% | 2.08% | 2.08% | 16% | 1.56%

EX. 8" GAS | EX. 2" FIBER OPTIC | PROP. LIGHTING CONDUIT | EX. 14" X 20" DUCT BANK | EX. 2" GAS | EX. GAS (ABANDONED) | EX. 12" STORM | 15" TYPE B | EX. 8" SANITARY 867.58 | 462+50.00 | 867.54 | EX. WATER | PROP. LIGHTING CONDUIT | EX. GAS (ABANDONED) | EX. 14" X 20" DUCT BANK | EX. ELECTRIC | EX. 8" GAS

EX R/W | TMP | DR19 - ASPHALT, COMMERCIAL

2.08% | 8.00% | 1.56% | 10.00% | 7.01%

PROP. TRENCH DRAIN D904 | EX. 14" X 20" DUCT BANK | EX. GAS (ABANDONED) | EX. WATER | PROP. LIGHTING CONDUIT | EX. ELECTRIC | EX. 8" GAS | EX. 8" SANITARY | 867.91 | 462+02.93 | 867.83

60 50 40 30 20 10 0 10 20 30 40 50 60 70

END AREA		VOLUME	
CUT	FILL	CUT	FILL
13.9	0		
		38	0
26.9	0.2		
		50	0.5
41	0	88	1

CALCULATED JTO | CHECKED JCH

CROSS SECTIONS W. MAIN ST. (SR 41)
STA. 462+02.93 TO STA. 463+00.00

MIA-41-10.32

64
194

S:\CIN\4300--4399\4354\004\Drawings\CAD\110253\roadway\sheets\10253XS001.dgn 10/1/2021 4:38:22 PM Allisonw

SEEDING	
END WIDTH	SQ. YDS.

℄ W. MAIN ST.

ITEM 204 - EXCAVATION OF UNSUITABLE SUBGRADE (12" DEEP)

TMP | EX R/W | DR22 - GRAVEL, RESIDENTIAL | 4.68% | 1.56% | 8.00% | 2.08%
EX. 2" FIBER OPTIC | EX. 14" X 20" DUCT BANK | EX. 2" GAS | PROP. LIGHTING CONDUIT | EX. 12" STORM | EX. GAS (ABANDONED) | EX. GAS (ABANDONED) | 18" TYPE B
865.92 | 464+02.38 | 865.78

TMP | EX R/W | 4.68% | 1.56% | 8.00% | 2.08% | 2.08% | 4.17% | 1.56% | 4:1 | EX R/W | TMP
EX. 2" FIBER OPTIC | EX. 14" X 20" DUCT BANK | EX. 2" GAS | PROP. LIGHTING CONDUIT | EX. 12" STORM | EX. GAS (ABANDONED) | EX. GAS (ABANDONED) | EX. WATER | PROP. LIGHTING CONDUIT | EX. ELECTRIC | EX. GAS (ABANDONED) | EX. 8" GAS | 18" TYPE B
EX. 8" SANITARY 865.95 | 464+00.00 | 865.80

EX. BUILDING FF | TMP | EX R/W | 4:1 | 1.56% | 2.08% | 2.08% | SOUTH LANE INTERSECTION
EX. 2" FIBER OPTIC | EX. WATER | EX. 14" X 20" DUCT BANK | EX. 2" GAS | PROP. LIGHTING CONDUIT | EX. GAS (ABANDONED) | EX. GAS (ABANDONED) | EX. 12" STORM | EX. WATER | PROP. LIGHTING CONDUIT | EX. GAS (ABANDONED) | EX. 14" X 20" DUCT BANK | EX. ELECTRIC | EX. 8" GAS | 18" TYPE B
EX. 8" SANITARY 866.50 | 463+50.00 | 866.37

TMP | EX R/W | DR21 - CONCRETE, RESIDENTIAL | 6.00% | 1.56% | 7.95% | 2.08%
EX. 2" FIBER OPTIC | EX. 14" X 20" DUCT BANK | EX. WATER | EX. 2" GAS | PROP. LIGHTING CONDUIT | EX. GAS (ABANDONED) | EX. 12" STORM | 18" TYPE B
EX. 8" SANITARY 866.92 | 463+11.88 | 866.81

870 | 865 | 860 | 855

60 | 50 | 40 | 30 | 20 | 10 | 0 | 10 | 20 | 30 | 40 | 50 | 60

END AREA		VOLUME	
CUT	FILL	CUT	FILL
23.8	0	35	0
14.2	0	26	0
38	0	61	0

CALCULATED JTO | CHECKED JCH

CROSS SECTIONS W. MAIN ST. (SR 41)
STA. 463+11.88 TO STA. 464+02.38

MIA-41-10.32

65
194

S:\CIN\4300-4399\4354\004\Drawings\CAD\110253\roadway\sheets\10253XS001.dgn 10/1/2021 4:38:23 PM Allisonw

SEEDING	
END WIDTH	SQ. YDS.

℄ W. MAIN ST.

ITEM 204 - EXCAVATION OF UNSUITABLE SUBGRADE (12" DEEP)

DR25 - ASPHALT, RESIDENTIAL

EX R/W

0.73% 1.56% 8.00% 2.08%

EX. 2" FIBER OPTIC

EX. 14" X 20" DUCT BANK

EX. 2" GAS

PROP. LIGHTING CONDUIT

EX. GAS (ABANDONED)

EX. GAS (ABANDONED)

18" TYPE B

864.86

464+98.92

864.70

TMP

EX R/W

DR24 - ASPHALT, RESIDENTIAL

0.32% 1.56% 4.00% 2.01%

EX. 2" FIBER OPTIC

EX. 14" X 20" DUCT BANK

EX. 2" GAS

PROP. LIGHTING CONDUIT

EX. GAS (ABANDONED)

EX. 12" STORM

EX. GAS (ABANDONED)

18" TYPE B

865.28

464+58.54

865.13

TMP

EX R/W

1.56% 4.17% 2.08% 2.08% 4.17% 1.56% 4:1

EX. 2" FIBER OPTIC

EX. 14" X 20" DUCT BANK

EX. 2" GAS

PROP. LIGHTING CONDUIT

EX. GAS (ABANDONED)

EX. 12" STORM

EX. GAS (ABANDONED)

18" TYPE B

EX. WATER

PROP. LIGHTING CONDUIT

EX. ELECTRIC

EX. 14" X 20" DUCT BANK

EX. GAS (ABANDONED)

EX. 8" GAS

EX. 8" SANITARY

865.40

464+50.00

865.25

EX R/W

TMP

DR23 - ASPHALT, RESIDENTIAL

2.08% 8.00% 1.56% 10.00% 4.76%

EX. WATER

PROP. LIGHTING CONDUIT

EX. ELECTRIC

EX. 14" X 20" DUCT BANK

EX. GAS (ABANDONED)

EX. 8" GAS

EX. 8" SANITARY

865.50

464+40.62

865.35

870 865 860 855

60 50 40 30 20 10 0 10 20 30 40 50 60

END AREA		VOLUME	
CUT	FILL	CUT	FILL
21.7	3		
		42	3
22	3	42	3

CALCULATED JTO

CHECKED JCH

CROSS SECTIONS W. MAIN ST. (SR 41) STA. 464+40.62 TO STA. 464+98.92

MIA-41-10.32

66
194

S:\CIN\4300-4399\4354\004\Drawings\CAD\110253\roadway\sheets\10253XS001.dgn 10/1/2021 4:38:24 PM Allisonw

SEEDING	
END WIDTH	SQ. YDS.

℄ W. MAIN ST.

ITEM 204 - EXCAVATION OF UNSUITABLE SUBGRADE (12" DEEP)

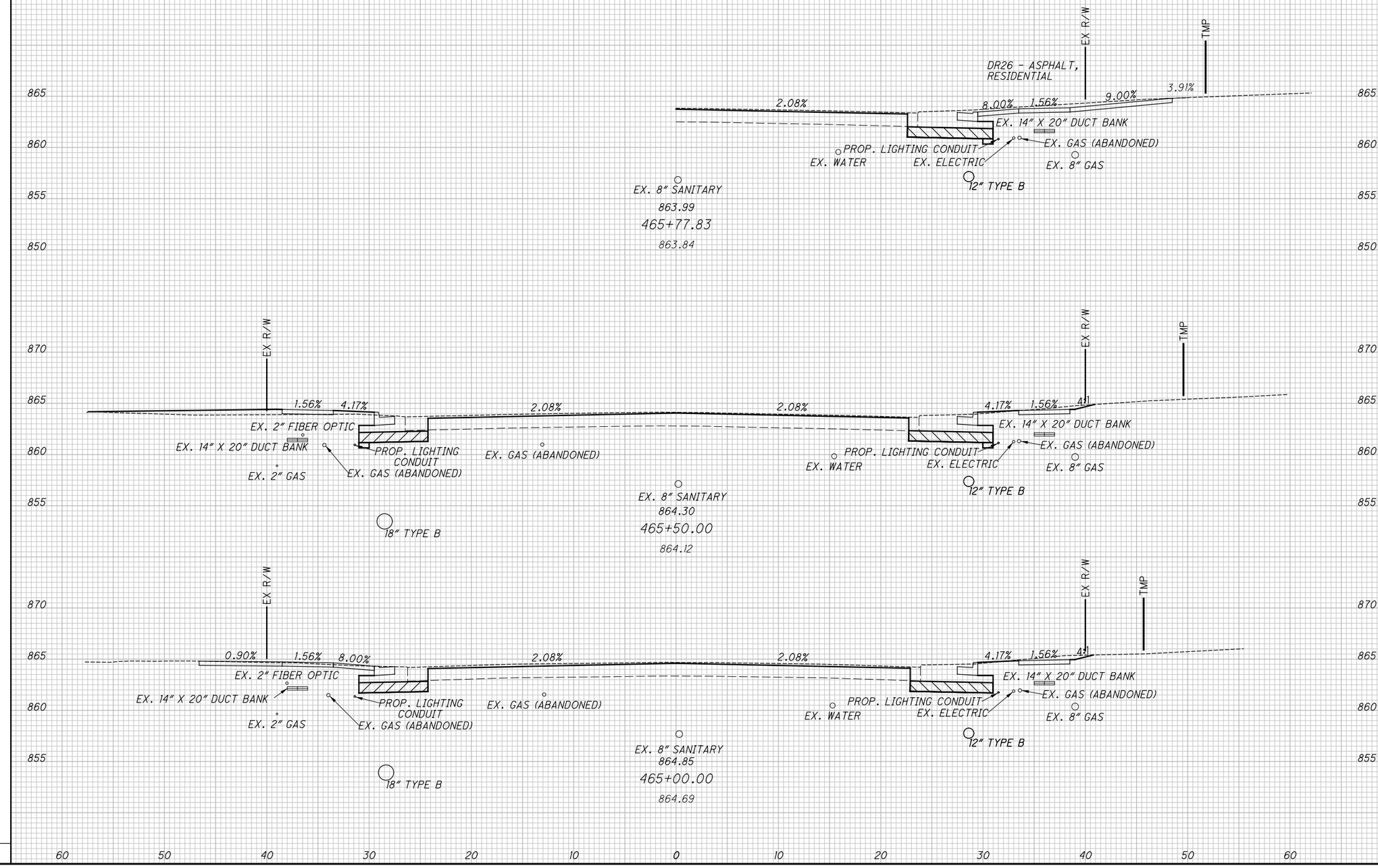

END AREA		VOLUME	
CUT	FILL	CUT	FILL
19.8	8		
		36	8
18.7	0.1		
		37	3
39	8	73	11

CALCULATED JTO
CHECKED JCH

CROSS SECTIONS W. MAIN ST. (SR 41)
STA. 465+00.00 TO STA. 465+77.83

MIA-41-10.32

67
194

S:\CIN\4300--4399\4354\004\Drawings\CAD\110253\roadway\sheets\10253XS001.dgn 10/1/2021 4:38:25 PM Allisonw

SEEDING	
END WIDTH	SQ. YDS.

℄ W. MAIN ST.

ITEM 204 - EXCAVATION OF UNSUITABLE SUBGRADE (12" DEEP)

TMP

EX R/W

D28 - GRAVEL, RESIDENTIAL

1.00% 1.56% 8.00% 2.08%

EX. 2" FIBER OPTIC

EX. 14" X 20" DUCT BANK

PROP. LIGHTING CONDUIT

EX. GAS (ABANDONED)

EX. 2" GAS

EX. GAS (ABANDONED)

18" TYPE B

862.93

466+74.05

862.80

EX R/W

TMP

D27 - ASPHALT, RESIDENTIAL

2.08% 8.00% 1.56% 9.00% 4.02%

EX. 14" X 20" DUCT BANK

EX. GAS (ABANDONED)

PROP. LIGHTING CONDUIT

EX. WATER

EX. ELECTRIC

EX. 8" GAS

EX. 8" SANITARY

863.09

466+60.11

862.95

WESTBROOK INTERSECTION

2.08% 2.08% 8.00% 1.56%

EX. 14" X 20" DUCT BANK

EX. GAS (ABANDONED)

PROP. LIGHTING CONDUIT

EX. GAS (ABANDONED)

EX. 2" GAS

EX. WATER

EX. ELECTRIC

EX. 8" GAS

EX. 8" SANITARY

863.20

466+50.00

863.08

18" TYPE B

TMP

EX R/W

EX R/W

TMP

11.39:1 1.56% 4.17% 2.08% 2.08% 4.17% 1.56% 4:1

EX. 2" FIBER OPTIC

EX. 14" X 20" DUCT BANK

PROP. LIGHTING CONDUIT

EX. GAS (ABANDONED)

EX. 2" GAS

EX. GAS (ABANDONED)

EX. WATER

EX. ELECTRIC

EX. 8" GAS

12" TYPE B

EX. 8" SANITARY

863.75

466+00.00

863.62

18" TYPE B

15" TYPE B

D602

D601

865 860 855 850

60 50 40 30 20 10 0 10 20 30 40 50 60

END AREA		VOLUME	
CUT	FILL	CUT	FILL
44	5	81	17
		40	12
23.8	5.2		
		41	5
20.6	0		

CALCULATED JTO

CHECKED JCH

CROSS SECTIONS W. MAIN ST. (SR 41) STA. 466+00.00 TO STA. 466+74.05

MIA-41-10.32

S:\CIN\4300--4399\4354\004\Drawings\CAD\110253\roadway\sheets\10253XS001.dgn 10/1/2021 4:38:26 PM Allisonw

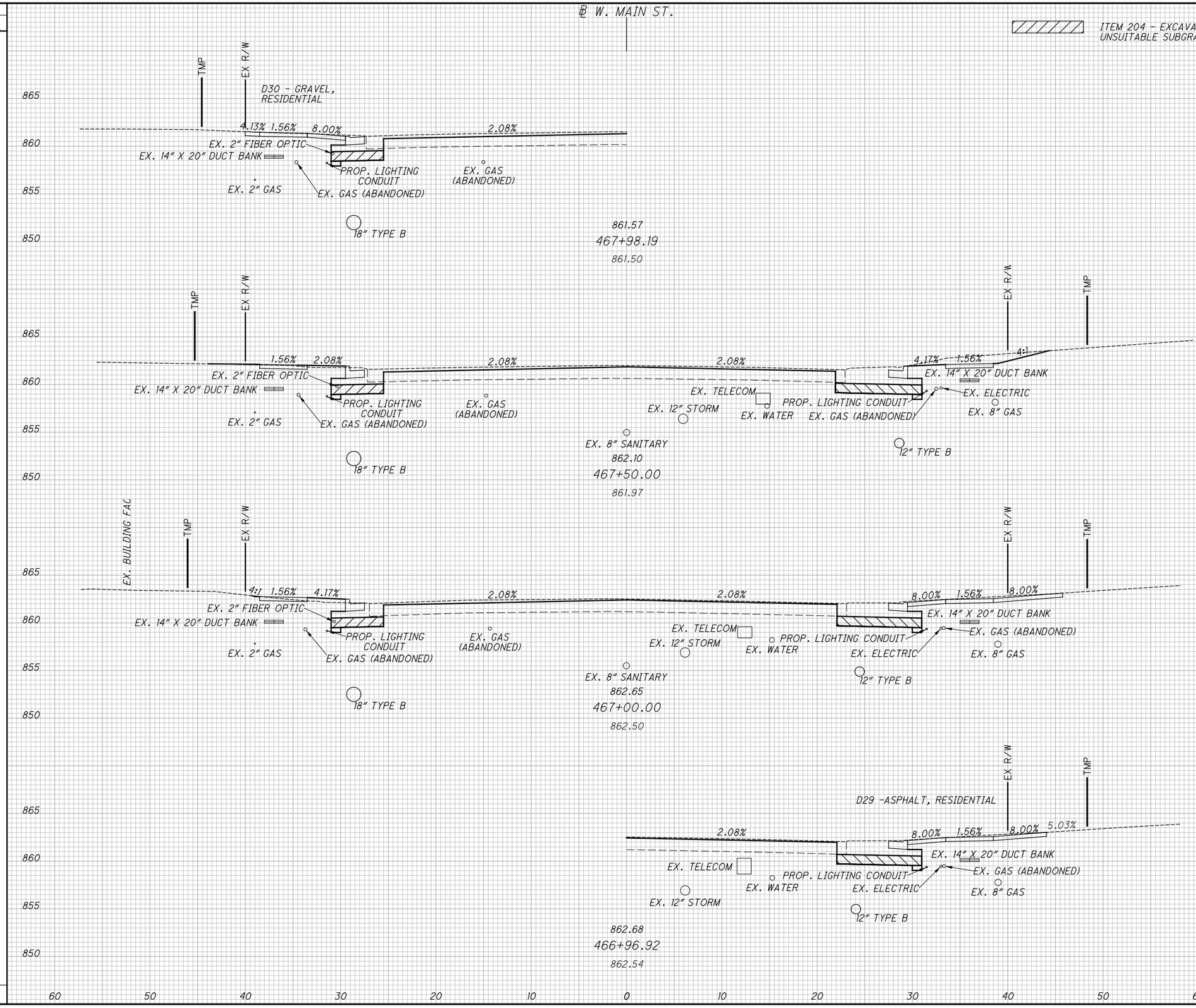

SEEDING	
END WIDTH	SQ. YDS.

END AREA		VOLUME	
CUT	FILL	CUT	FILL
29.9	1		
		45	2
18.2	1.5		
		36	1
48.1	3	81	3

CALCULATED JTO
CHECKED JCH

CROSS SECTIONS W. MAIN ST. (SR 41) STA. 466+96.92 TO STA. 467+98.19

MIA-41-10.32

S:\C\N\4300-4399\4354\004\Drawings\CAD\110253\roadway\sheets\10253XS001.dgn 10/1/2021 4:38:26 PM Allisonw

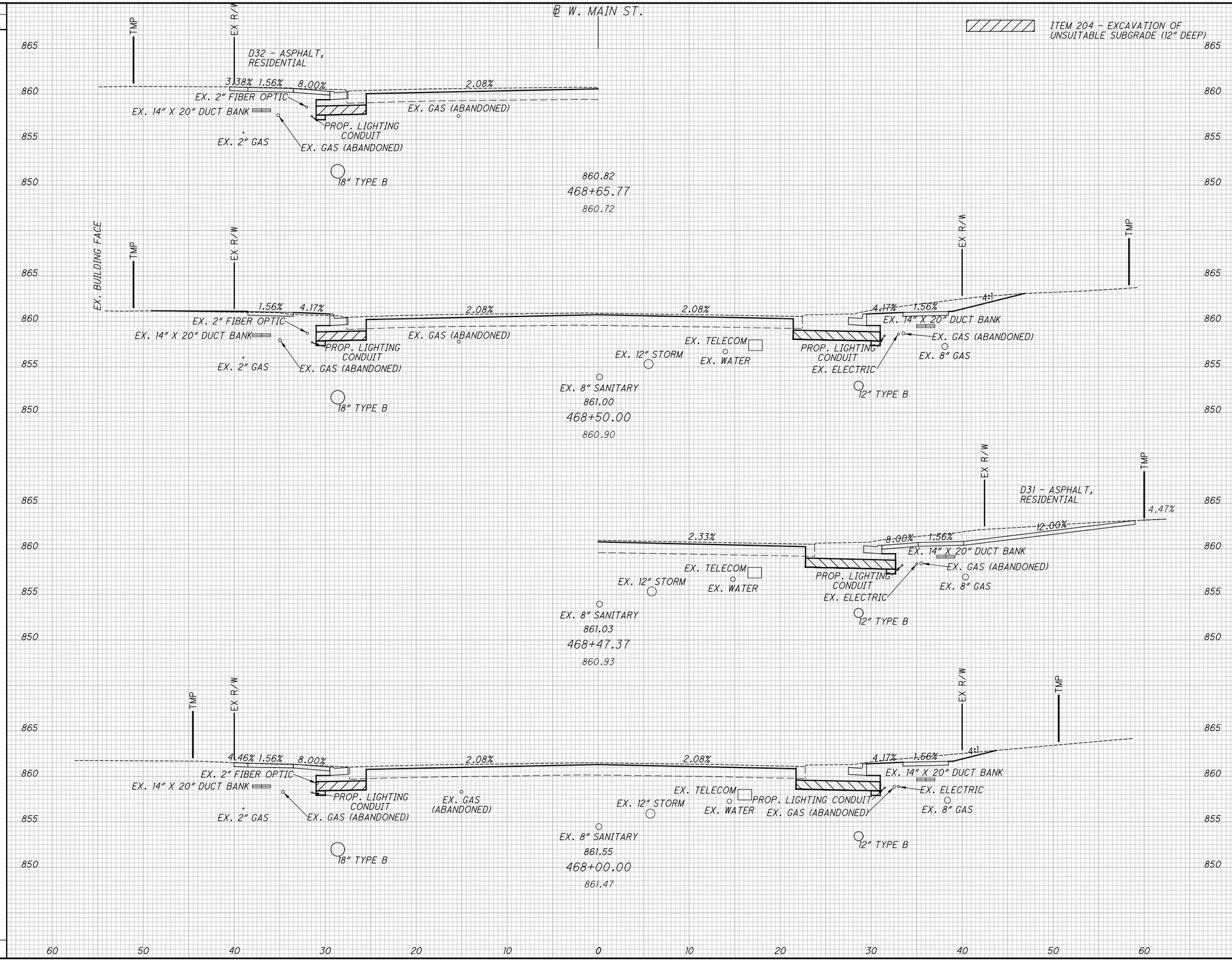

SEEDING	
END WIDTH	SQ. YDS.

END AREA		VOLUME	
CUT	FILL	CUT	FILL
35	1.2		
27.1	0		
		58	1
		53	1
62	1	111	2

CALCULATED JTO
CHECKED JCH

CROSS SECTIONS W. MAIN ST. (SR 41) STA. 468+00.00 TO STA. 468+65.77

MIA-41-10.32

S:\CIN\4300--4399\4354\004\Drawings\CAD\110253\roadway\sheets\10253XS001.dgn 10/1/2021 4:38:27 PM Allisonw

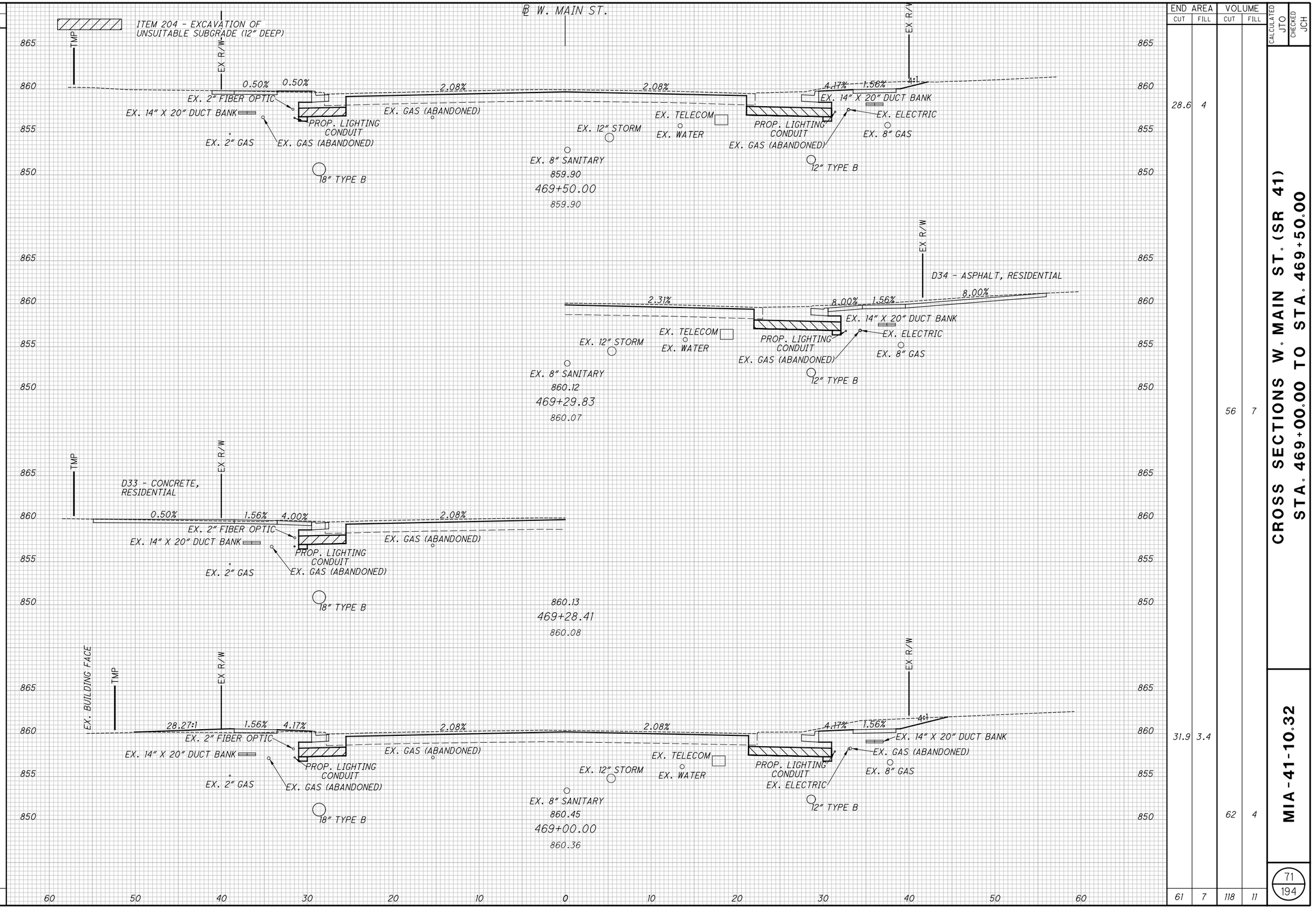

SEEDING	
END WIDTH	SQ. YDS.

END AREA	
CUT	FILL
28.6	4
31.9	3.4
61	7

VOLUME	
CUT	FILL
56	7
62	4
118	11

CALCULATED JTO
CHECKED JCH

CROSS SECTIONS W. MAIN ST. (SR 41) STA. 469+00.00 TO STA. 469+50.00

MIA-41-10.32

71
194

S:\CIN\4300--4399\4354\004\Drawings\CAD\110253\roadway\sheets\10253XS001.dgn 10/1/2021 4:38:28 PM Allisonw

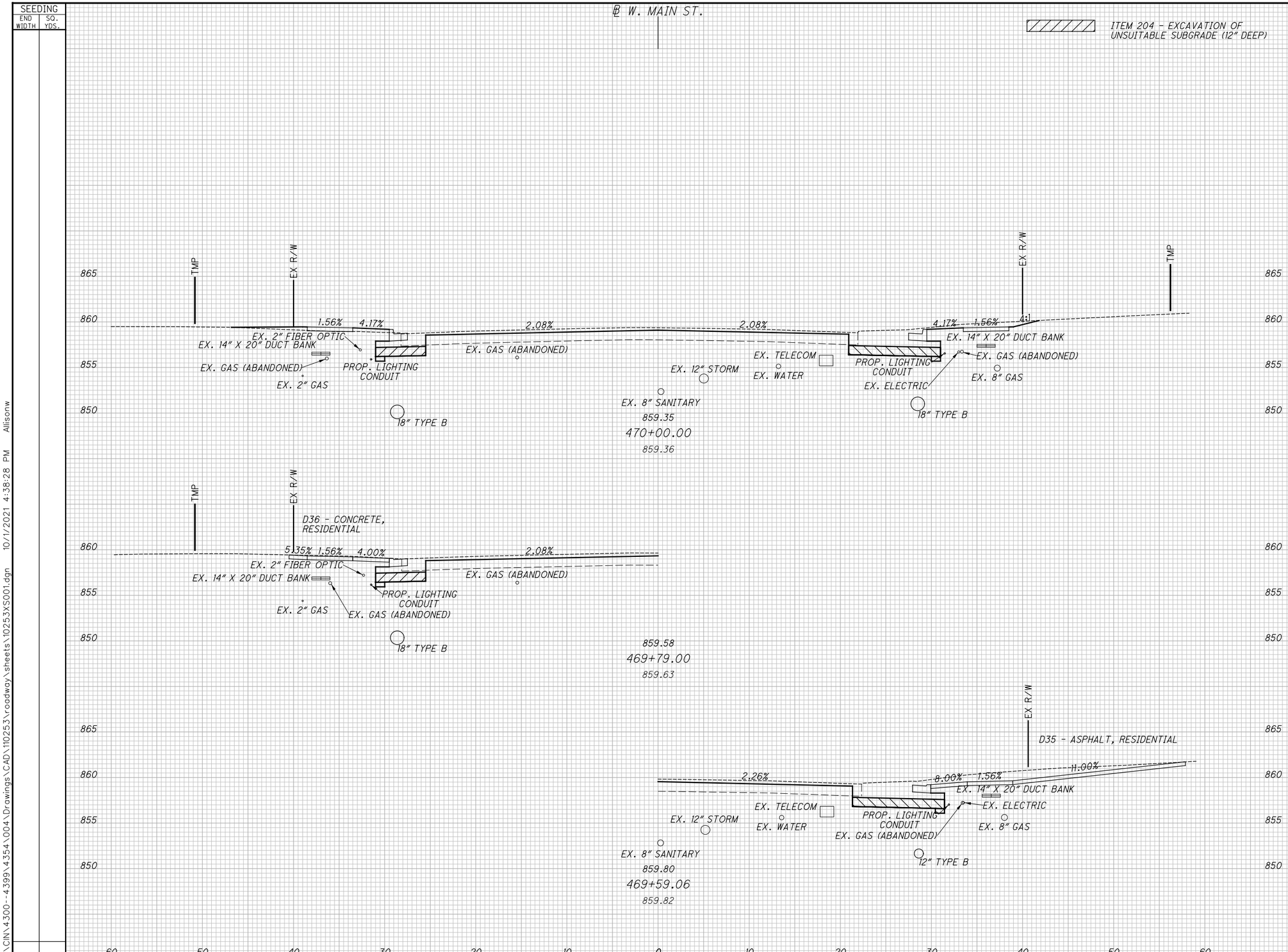

END AREA CUT	END AREA FILL	VOLUME CUT	VOLUME FILL
24.8	3.1		
		49	7
25	3	49	7

CALCULATED JTO
CHECKED JCH

CROSS SECTIONS W. MAIN ST. (SR 41)
STA. 469+59.06 TO STA. 470+00.00

MIA-41-10.32

S:\CIN\4300--4399\4354\004\Drawings\CAD\110253\roadway\sheets\10253XS001.dgn 10/1/2021 4:38:28 PM Allisonw

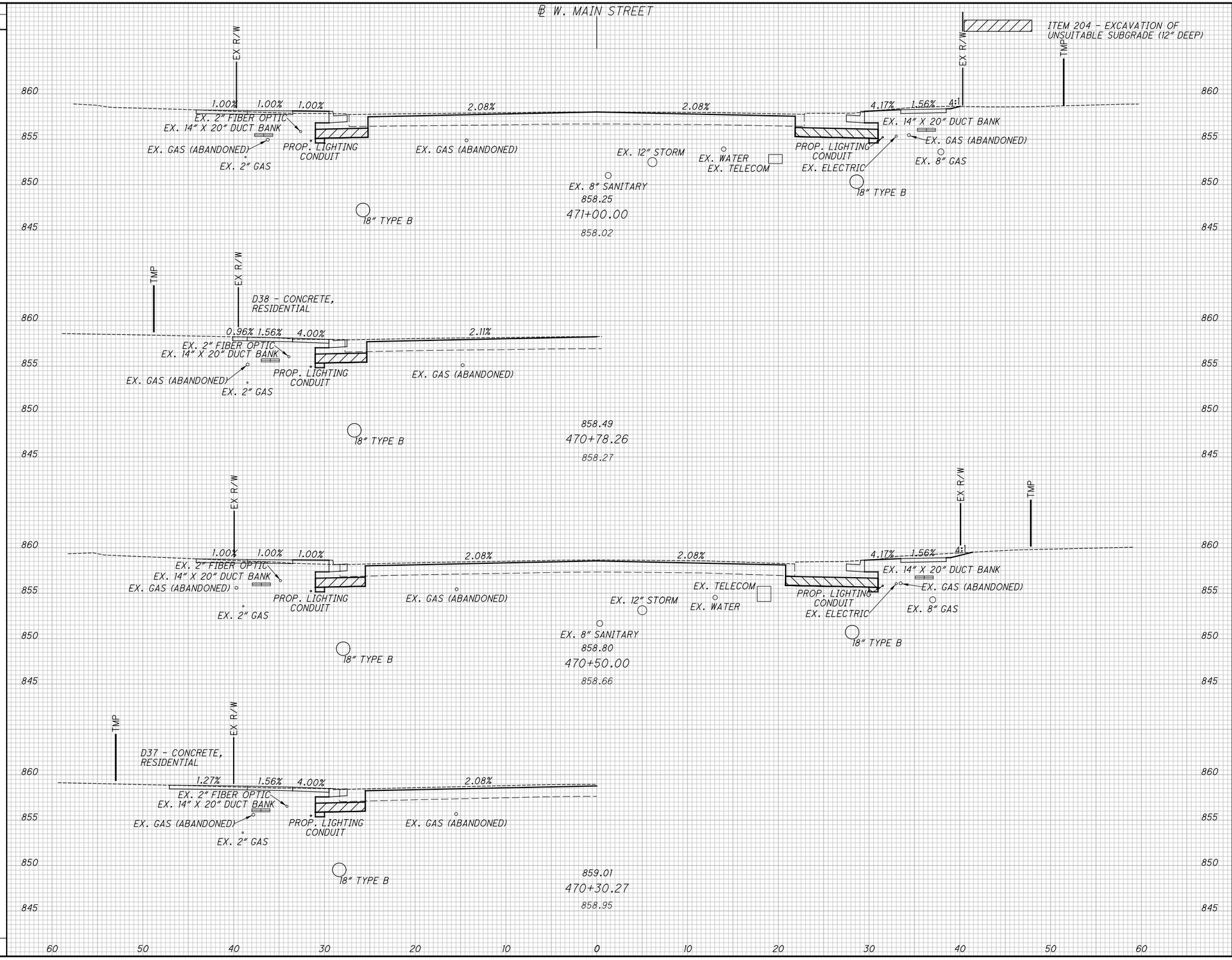

SEEDING END WIDTH	SEEDING SQ. YDS.	END AREA CUT	END AREA FILL	VOLUME CUT	VOLUME FILL
		21.6	4.8		
				41	9
		22.4	4.9		
				44	7
		44	10	85	16

CALCULATED JTO
CHECKED JCH

CROSS SECTIONS W. MAIN ST. (SR 41)
STA. 470+30.27 TO STA. 471+00.00

MIA-41-10.32

S:\CIN\4300--4399\4354\004\Drawings\CAD\110253\roadway\sheets\10253XS001.dgn 10/1/2021 4:38:29 PM Allisonw

SEEDING	
END WIDTH	SQ. YDS.

END AREA		VOLUME	
CUT	FILL	CUT	FILL
20.6	2		
		39	6
21	2	39	6

CALCULATED JTO
CHECKED JCH

ITEM 204 - EXCAVATION OF UNSUITABLE SUBGRADE (12" DEEP)

℄ W. MAIN ST.

TMP
EX R/W
D41 - CONCRETE, RESIDENTIAL
0.60% 1.56% 8.00% 2.11%
EX. 2" FIBER OPTIC
EX. 14" X 20" DUCT BANK
EX. 2" GAS
PROP. LIGHTING CONDUIT
EX. GAS (ABANDONED)
EX. GAS (ABANDONED)
857.39
471+78.25
857.10
24" TYPE B

TMP
EX R/W
48:1 1.56% 4.17% 2.08% 2.08% 4.17% 1.56% 4:1
EX. 2" FIBER OPTIC
EX. 14" X 20" DUCT BANK
EX. 2" GAS
PROP. LIGHTING CONDUIT
EX. GAS (ABANDONED)
EX. GAS (ABANDONED)
EX. 12" STORM
EX. WATER
EX. TELECOM
EX. 8" SANITARY
857.70
471+50.00
857.41
18" TYPE B
EX R/W
TMP
EX. 14" X 20" DUCT BANK
EX. GAS (ABANDONED)
EX. 8" GAS
PROP. LIGHTING CONDUIT
EX. ELECTRIC
18" TYPE B
D704
18" TYPE B

TMP
EX R/W
D40 - CONCRETE, RESIDENTIAL
5.59% 1.56% 8.00% 2.11%
EX. 2" FIBER OPTIC
EX. 14" X 20" DUCT BANK
EX. 2" GAS
PROP. LIGHTING CONDUIT
EX. GAS (ABANDONED)
EX. GAS (ABANDONED)
857.91
471+30.27
857.66
18" TYPE B

EX R/W
TMP
D39 - ASPHALT, RESIDENTIAL
1.98% 8.00% 1.56% 8.00%
EX. 14" X 20" DUCT BANK
EX. GAS (ABANDONED)
EX. 12" STORM
EX. WATER
EX. TELECOM
PROP. LIGHTING CONDUIT
EX. ELECTRIC
EX. 8" GAS
EX. 8" SANITARY
858.05
471+17.78
857.80
18" TYPE B

860 855 850 845

60 50 40 30 20 10 0 10 20 30 40 50 60 70

CROSS SECTIONS W. MAIN ST. (SR 41) STA. 471+17.78 TO STA. 471+78.25

MIA-41-10.32

S:\CIN\4300-4399\4354\004\Drawings\CAD\110253\roadway\sheets\10253XS001.dgn 10/1/2021 4:38:30 PM Allisonw

SEEDING	
END WIDTH	SQ. YDS.

℄ W. MAIN ST.

ITEM 204 - EXCAVATION OF UNSUITABLE SUBGRADE (12" DEEP)

END AREA		VOLUME	
CUT	FILL	CUT	FILL
35	7	67	11
16.8	2.9	35	5
17.9	4.1	32	6

CALCULATED JTO
CHECKED JCH

CROSS SECTIONS W. MAIN ST. (SR 41)
STA. 472+00.00 TO STA. 472+62.60

MIA-41-10.32

75
194

S:\CIN\4300--4399\4354\004\Drawings\CAD\110253\roadway\sheets\10253XS001.dgn 10/1/2021 4:38:30 PM Allisonw

SEEDING	
END WIDTH	SQ. YDS.

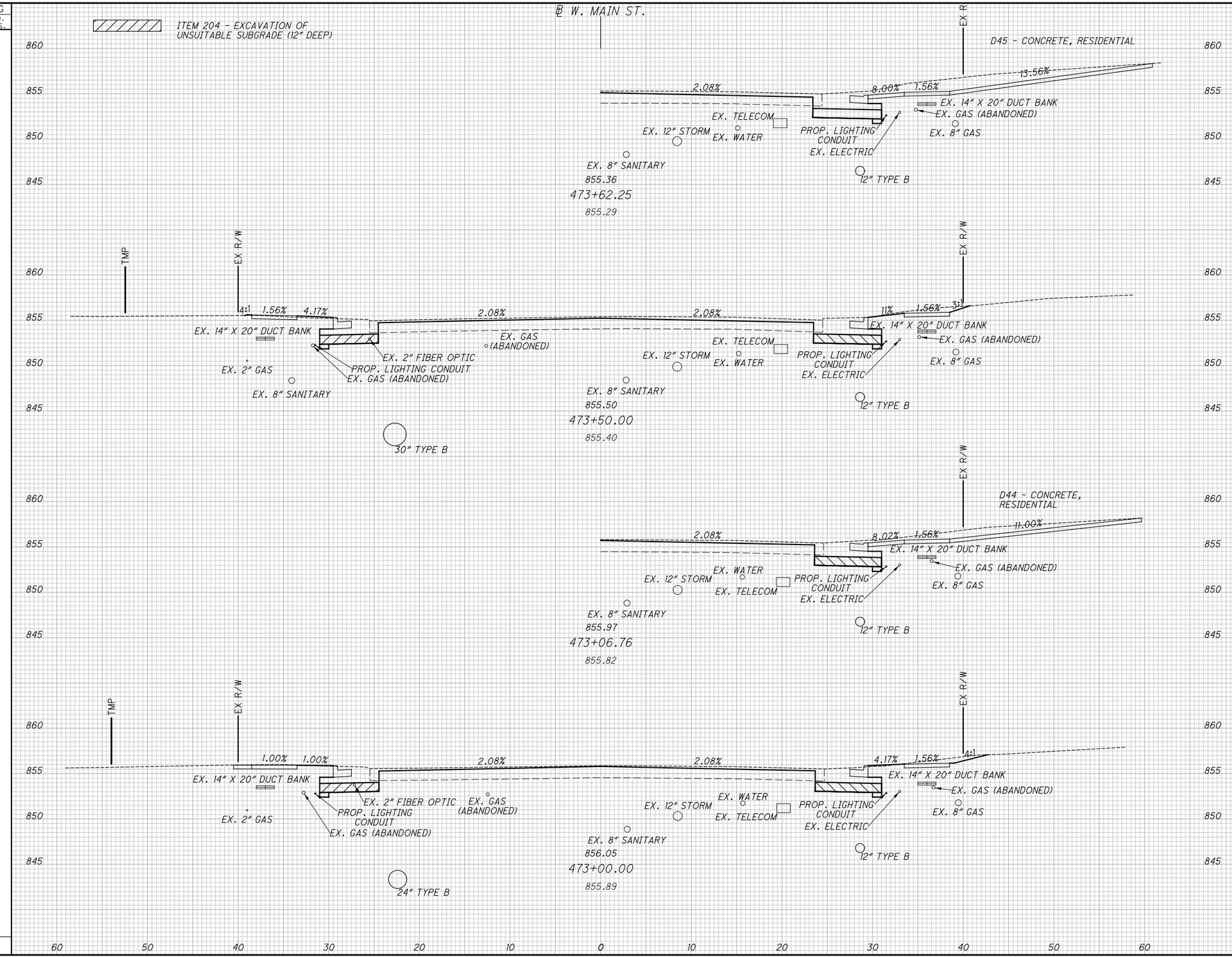

END AREA		VOLUME	
CUT	FILL	CUT	FILL
25.1	0.7		
		45	1
		39	5
24	0.9		
49	2	84	6

CALCULATED JTO
CHECKED JCH

CROSS SECTIONS W. MAIN ST. (SR 41) STA. 473+00.00 TO STA. 473+62.25

MIA-41-10.32

S:\CIN\4300-4399\4354\004\Drawings\CAD\110253\roadway\sheets\10253XS001.dgn 10/1/2021 4:38:31 PM Allisonw

SEEDING	
END WIDTH	SQ. YDS.

℄ W. MAIN ST.

ITEM 204 - EXCAVATION OF UNSUITABLE SUBGRADE (12" DEEP)

TMP | EX R/W | 48:1 | 1.56% | 4.17% | 2.08% | 2.08% | 4.17% | 1.56% | 4:1 | EX R/W | TMP

EX. 14" X 20" DUCT BANK
EX. 2" GAS
EX. 2" FIBER OPTIC
PROP. LIGHTING CONDUIT
EX. GAS (ABANDONED)
EX. GAS (ABANDONED)
EX. 12" STORM
EX. TELECOM
EX. WATER
PROP. LIGHTING CONDUIT
EX. GAS (ABANDONED)
EX. 14" X 20" DUCT BANK
EX. ELECTRIC
EX. 8" GAS
EX. 8" SANITARY
854.27
474+50.00
854.15
12" TYPE B
30" TYPE B

TMP | EX R/W | 2.00% | 1.56% | 4.17% | 2.08% | 2.08% | 4:1 | 1.56% | EX R/W | TMP

EX. 14" X 20" DUCT BANK
EX. 2" GAS
EX. 2" FIBER OPTIC
PROP. LIGHTING CONDUIT
EX. GAS (ABANDONED)
EX. GAS (ABANDONED)
EX. 12" STORM
EX. TELECOM
EX. WATER
EX. 14" X 20" DUCT BANK
EX. GAS (ABANDONED)
EX. 8" GAS
PROP. LIGHTING CONDUIT
EX. ELECTRIC
EX. 8" SANITARY
EX. 8" SANITARY
854.93
474+00.00
854.90
12" TYPE B
30" TYPE B

TMP | EX R/W | D46 - ASPHALT, RESIDENTIAL | 8.00% | 1.56% | 8.00% | 2.08%

EX. 14" X 20" DUCT BANK
EX. GAS (ABANDONED)
EX. 2" GAS
PROP. LIGHTING CONDUIT
EX. 2" FIBER OPTIC
EX. GAS (ABANDONED)
12" TYPE B
EX. 8" SANITARY
855.11
473+85.10
855.07
D708
30" TYPE B

860 / 855 / 850 / 845

60 50 40 30 20 10 0 10 20 30 40 50 60

END AREA		VOLUME	
CUT	FILL	CUT	FILL
30.1	1.3	50	4
23.8	3.2	45	4
54	5	95	8

CALCULATED JTO
CHECKED JCH

CROSS SECTIONS W. MAIN ST. (SR 41)
STA. 473+85.10 TO STA. 474+50.00

MIA-41-10.32

77
194

S:\CIN\4300--4399\4354\004\Drawings\CAD\110253\roadway\sheets\10253XS001.dgn 10/1/2021 4:38:32 PM Allisonw

SEEDING	
END WIDTH	SQ. YDS.

℄ W. MAIN ST.

ITEM 204 - EXCHANGE OF UNSUITABLE SUBGRADE (12" DEEP)

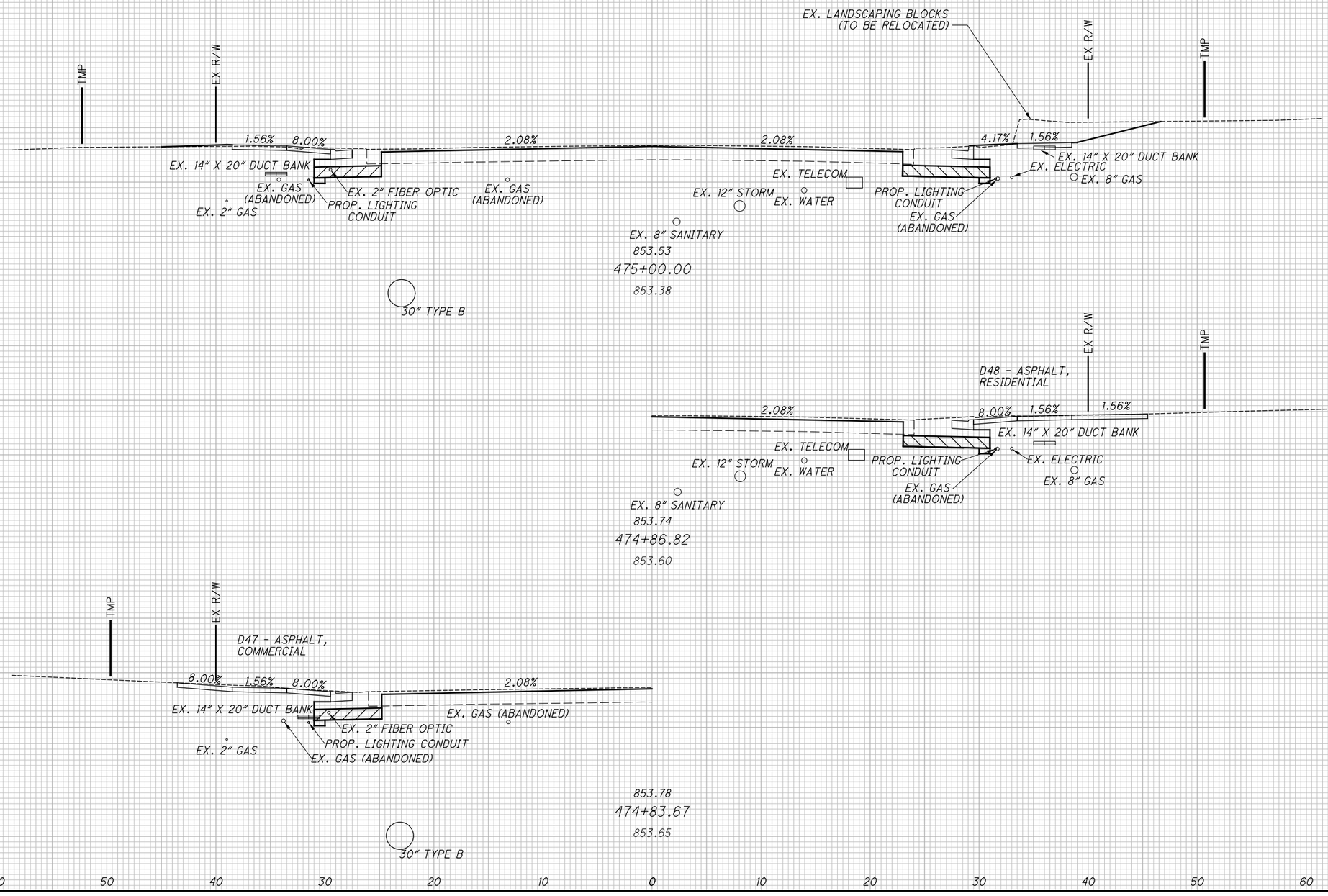

END AREA		VOLUME	
CUT	FILL	CUT	FILL
35	0.9		
35	1	60	2
		60	2

CALCULATED JTO
CHECKED JCH

CROSS SECTIONS W. MAIN ST. (SR 41)
STA. 474+83.67 TO STA. 475+00.00

MIA-41-10.32

78
194

S:\CIN\4300-4399\4354\004\Drawings\CAD\110253\roadway\sheets\10253XS001.dgn 10/1/2021 4:38:33 PM Allisonw

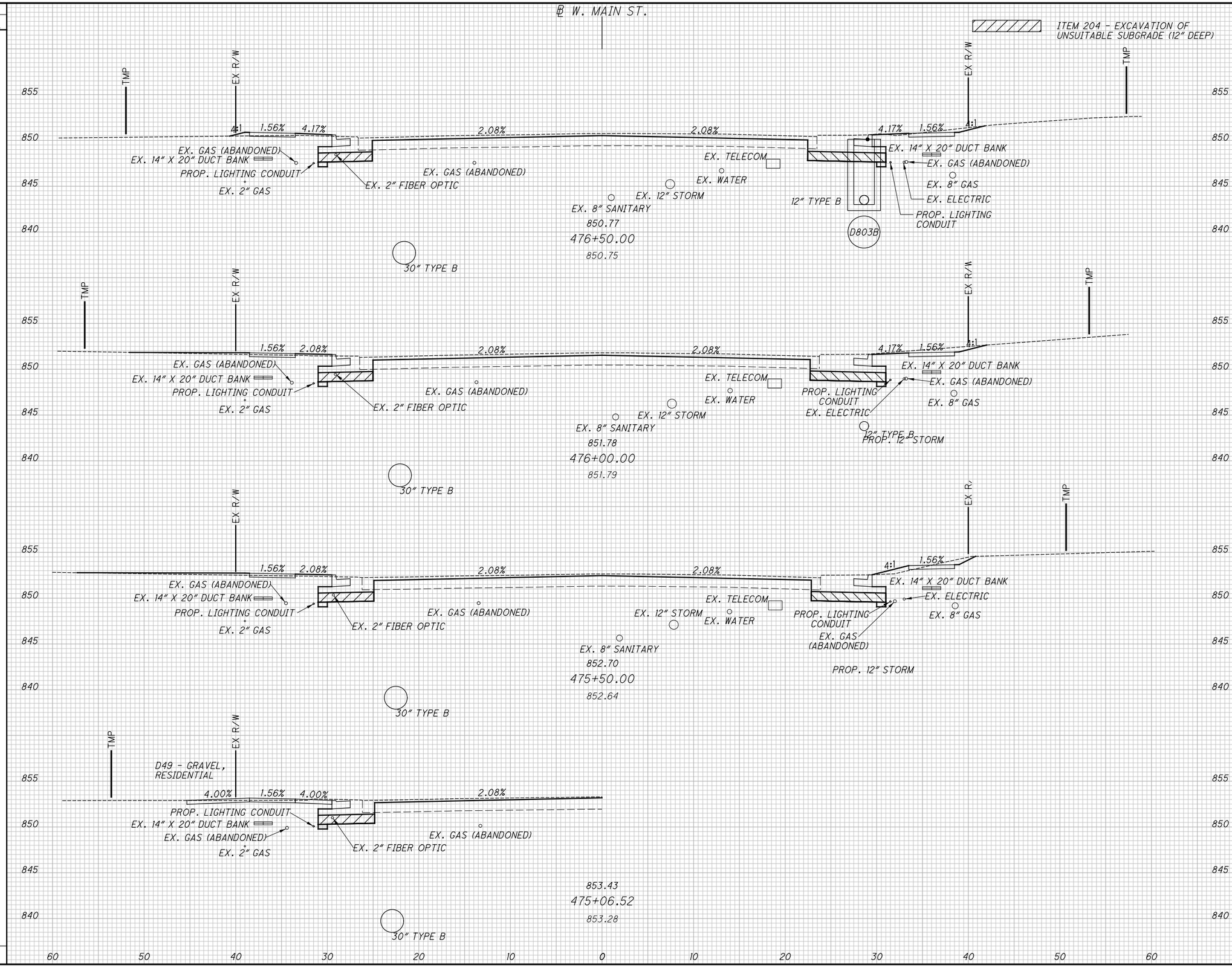

END AREA CUT	END AREA FILL	VOLUME CUT	VOLUME FILL
24	1.5		
		47	3
26.6	1.9		
		56	5
33.8	3		
		64	4
84	7	167	12

CALCULATED JTO
CHECKED JCH

CROSS SECTIONS W. MAIN ST. (SR 41)
STA. 475+06.52 TO STA. 476+50.00

MIA-41-10.32

S:\CIN\4300--4399\4354\004\Drawings\CAD\110253\roadway\sheets\10253XS001.dgn 10/1/2021 4:38:34 PM Allisonw

SEEDING	
END WIDTH	SQ. YDS.

℄ W. MAIN ST.

EX R/W

CONLEY PARK INTERSECTION

EX R/W

ITEM 204 - EXCAVATION OF UNSUITABLE SUBGRADE (12" DEEP)

TMP

850
845
840
835

51.22:1 | 1.56% | 4.17% | 2.08% | 2.08%

EX. GAS (ABANDONED)
EX. 14" X 20" DUCT BANK
PROP. LIGHTING CONDUIT
EX. 2" GAS
EX. 2" FIBER OPTIC
EX. GAS (ABANDONED)
EX. TELECOM
EX. WATER
EX. 12" STORM
EX. 8" SANITARY
EX. 12" STORM
PROP. LIGHTING CONDUIT
EX. GAS (ABANDONED)
EX. 14" X 20" DUCT BANK
EX. ELECTRIC
EX. 8" GAS

848.48
477+50.00
848.37

36" TYPE B

TMP

EX R/W

D51 - GRAVEL, RESIDENTIAL

850
845
840

2.26% | 1.56% | 4.00% | 2.08%

EX. GAS (ABANDONED)
EX. 14" X 20" DUCT BANK
PROP. LIGHTING CONDUIT
EX. 2" GAS
EX. 2" FIBER OPTIC
EX. GAS (ABANDONED)

849.58
477+04.01
849.50

30" TYPE B

TMP

EX R/W

855
850
845
840

2.26% | 1.56% | 4.00% | 2.08% | 2.08% | 4.17% | 1.56% | 4:1

EX. GAS (ABANDONED)
EX. 14" X 20" DUCT BANK
PROP. LIGHTING CONDUIT
EX. 2" GAS
EX. 2" FIBER OPTIC
EX. GAS (ABANDONED)
EX. TELECOM
EX. WATER
EX. 12" STORM
EX. 8" SANITARY
PROP. LIGHTING CONDUIT
EX. GAS (ABANDONED)
EX. 14" X 20" DUCT BANK
EX. ELECTRIC
EX. 8" GAS
12" TYPE B

849.67
477+00.00
849.59

30" TYPE B

EX R/W

TMP

D50 - CONCRETE, RESIDENTIAL

855
850
845
840

2.08% | 8.00% | 1.56% | 11.00%

EX. TELECOM
EX. WATER
EX. 12" STORM
EX. 8" SANITARY
PROP. LIGHTING CONDUIT
EX. 14" X 20" DUCT BANK
EX. GAS (ABANDONED)
EX. 8" GAS
EX. ELECTRIC
12" TYPE B

850.55
476+60.31
850.53

60 50 40 30 20 10 0 10 20 30 40 50 60

END AREA		VOLUME	
CUT	FILL	CUT	FILL
6.1	7.6		
		29	7
25.2	0.4		
		46	2
31	8	75	9

CALCULATED JTO
CHECKED JCH

CROSS SECTIONS W. MAIN ST. (SR 41) STA. 476+60.31 TO STA. 477+50.00

MIA-41-10.32

80
194

S:\C\IN\4300-4399\4354\004\Drawings\CAD\110253\roadway\sheets\10253XS001.dgn 10/1/2021 4:38:34 PM Allisonw

10/1/2021

SEEDING	
END WIDTH	SQ. YDS.

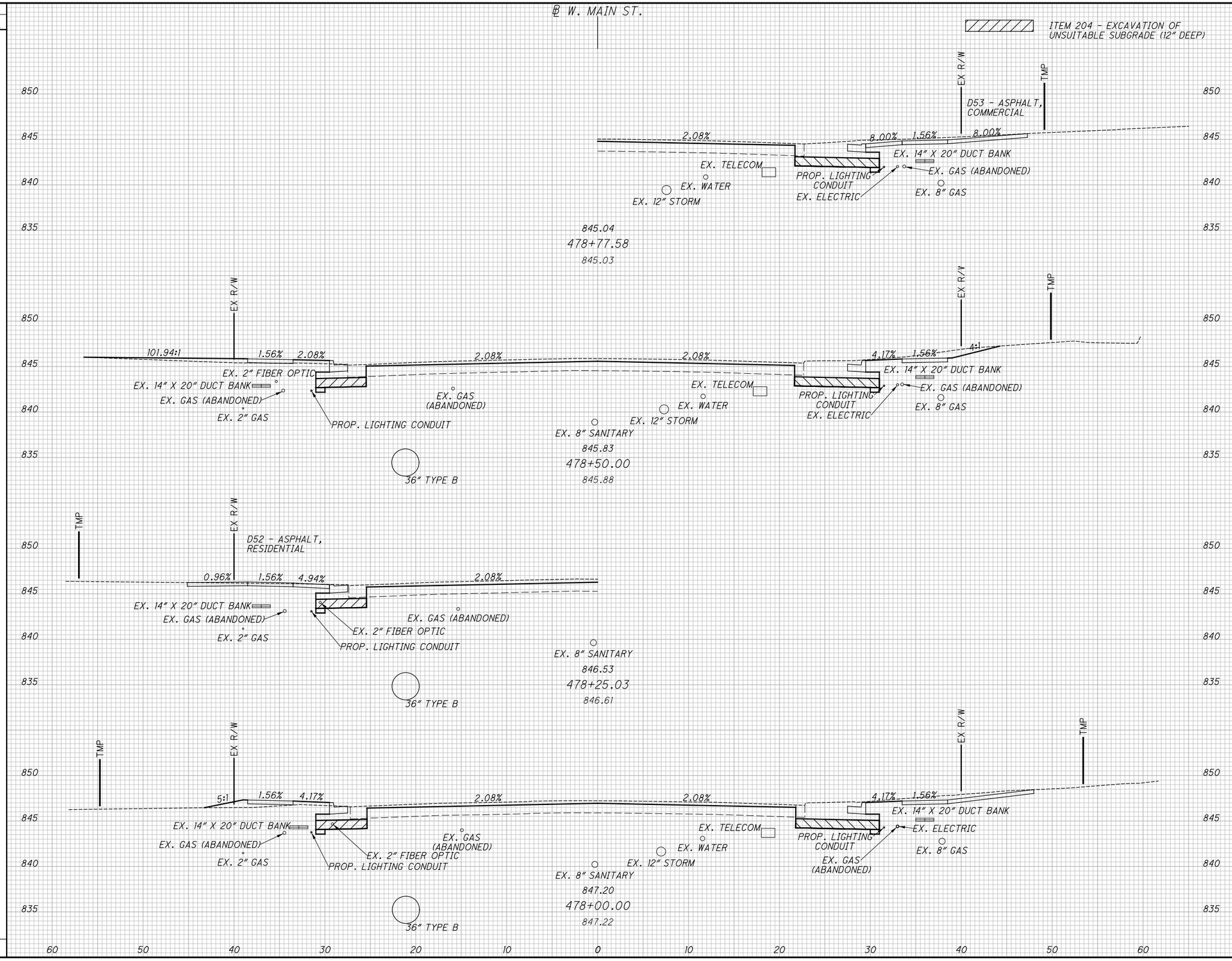

END AREA		VOLUME	
CUT	FILL	CUT	FILL
17.1	5.8		
		45	9
31.2	4.4		
		35	11
48	10	80	20

CALCULATED JTO
CHECKED JCH

CROSS SECTIONS W. MAIN ST. (SR 41)
STA. 478+00.00 TO STA. 478+77.58

MIA-41-10.32

81
194

S:\CIN\4300--4399\4354\004\Drawings\CAD\110253\roadway\sheets\10253XS001.dgn 10/1/2021 4:38:35 PM Allisonw

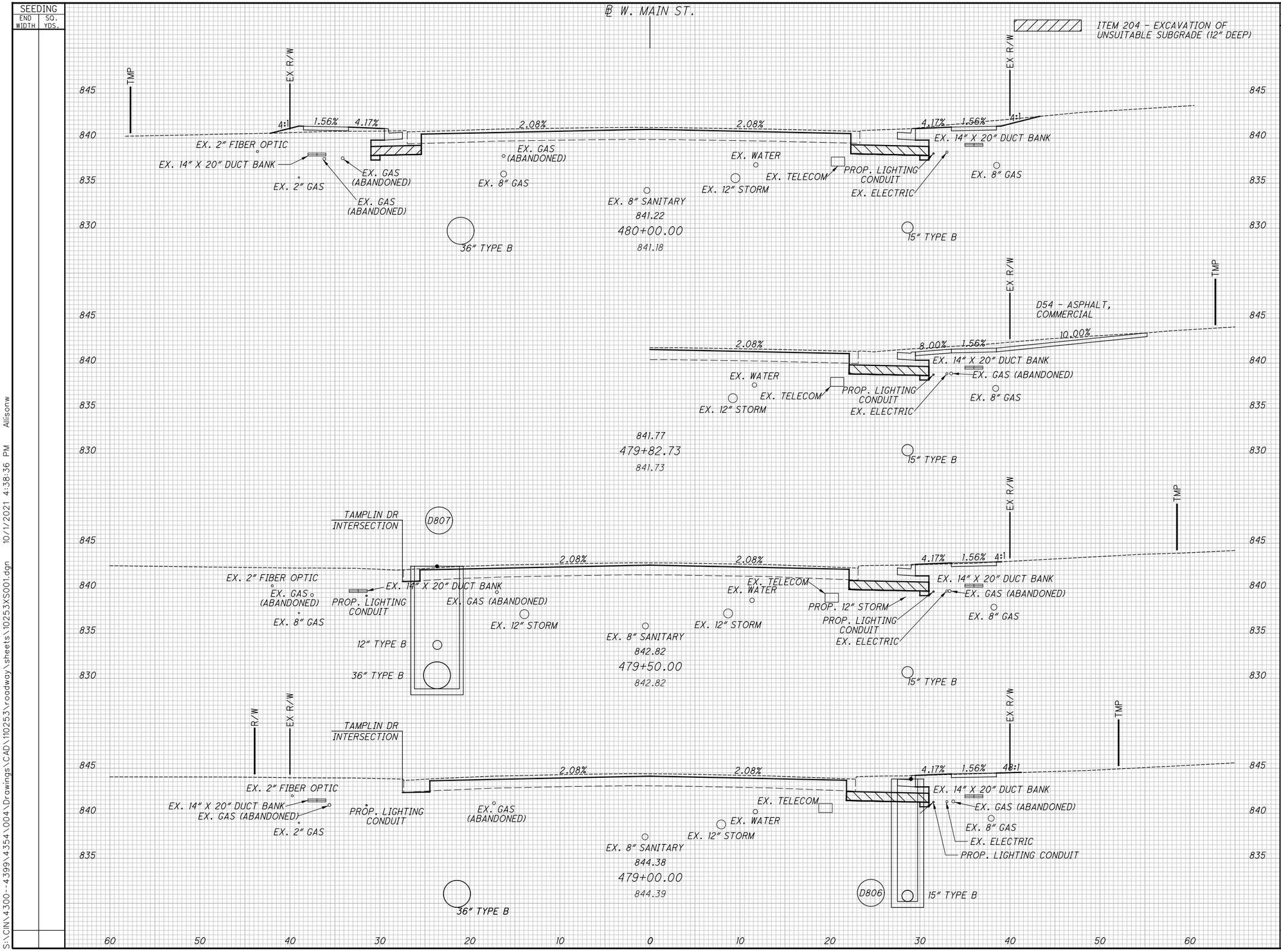

SEEDING	
END WIDTH	SQ. YDS.

END AREA	
CUT	FILL
26.9	3.4
13.6	0.3
15	0.2
56	4

VOLUME	
CUT	FILL
38	3
26	0.5
30	6
94	10

CALCULATED JTO
CHECKED JCH

CROSS SECTIONS W. MAIN ST. (SR 41)
STA. 479+00.00 TO STA. 480+00.00

MIA-41-10.32

82
194

S:\CIN\4300--4399\4354\004\Drawings\CAD\110253\roadway\sheets\10253XS001.dgn 10/1/2021 4:38:36 PM Allisonw

SEEDING	
END WIDTH	SQ. YDS.

℄ W. MAIN ST.

ITEM 204 - EXCAVATION OF UNSUITABLE SUBGRADE (12" DEEP)

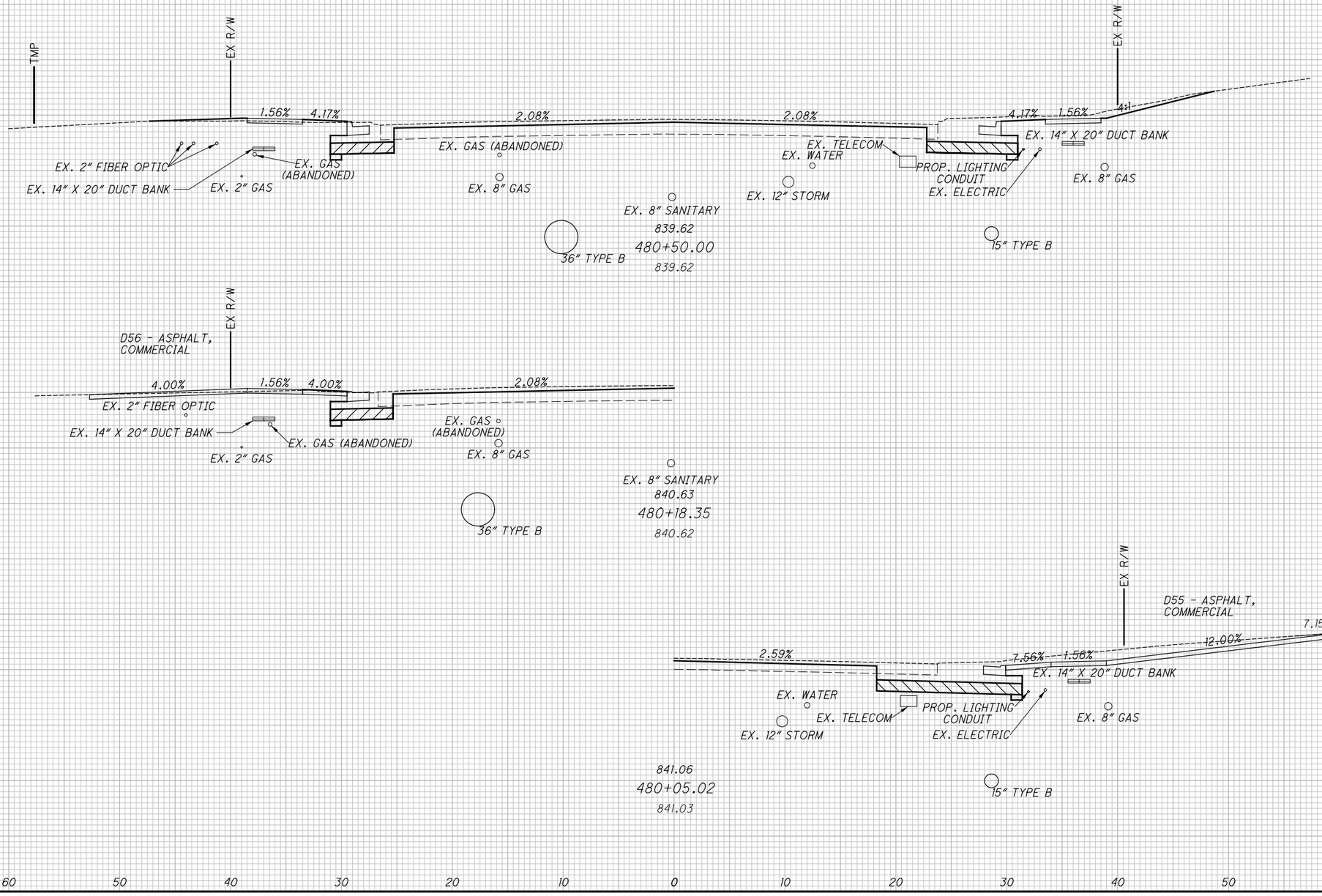

END AREA		VOLUME	
CUT	FILL	CUT	FILL
29.6	2		
		52	5
30	2	52	5

CALCULATED JTO
CHECKED JCH

CROSS SECTIONS W. MAIN ST.
STA. 480+11.97 TO STA. 480+50.00

MIA-41-10.32

83
194

S:\C\N\4300-4399\4354\004\Drawings\CAD\110253\roadway\sheets\10253XS001.dgn 10/1/2021 4:38:36 PM Allisonw

SEEDING	
END WIDTH	SQ. YDS.

℄ W. MAIN ST.

END WORK
STA. 481+50.00

ITEM 204 - EXCAVATION OF UNSUITABLE SUBGRADE (12" DEEP)

EX R/W
TMP
1.56% 4.00% 3.60% 1.20% 1.20% 3.60% 8.50% 1.56%
EX. 14" X 20" DUCT BANK
EX. 2" GAS
EX. GAS (ABANDONED)
EX. WATER
EX. TELECOM
EX. 12" STORM
EX. ELECTRIC
EX. FIBER OPTIC
EX. 14" X 20" DUCT BANK
EX. 8" GAS
EX. 8" SANITARY
836.42
481+50.00
836.42
36" TYPE B

TMP
EX R/W
D58 - ASPHALT, COMMERCIAL
1.29% 4.00% 2.08%
EX. 14" X 20" DUCT BANK
EX. GAS (ABANDONED)
EX. 2" GAS
837.55
481+14.80
837.51
36" TYPE B

EX R/W
TMP
D57 - ASPHALT, COMMERCIAL
2.25% 7.82% 1.56% 12.00% 10.84%
EX. WATER
EX. TELECOM
EX. 12" STORM
PROP. LIGHTING CONDUIT
EX. ELECTRIC
EX. FIBER OPTIC
EX. 14" X 20" DUCT BANK
EX. 8" GAS
EX. 8" SANITARY
837.95
481+02.10
837.94

TMP
EX R/W
1:15 1.56% 4.17% 2.08% 2.08% 8.00% 1.56% 12.00%
EX. 14" X 20" DUCT BANK
EX. GAS (ABANDONED)
EX. 2" GAS
EX. WATER
EX. TELECOM
EX. 12" STORM
PROP. LIGHTING CONDUIT
EX. ELECTRIC
EX. FIBER OPTIC
EX. 14" X 20" DUCT BANK
EX. 8" GAS
EX. 8" SANITARY
838.02
481+00.00
838.01
36" TYPE B

840 835 830 825

60 50 40 30 20 10 0 10 20 30 40 50 60

END AREA		VOLUME	
CUT	FILL	CUT	FILL
26.2	0		
29.3	1.1	51	1
		56	3
56	1	107	4

CALCULATED JTO
CHECKED JCH

CROSS SECTIONS W. MAIN ST. STA. 481+00.00 TO STA. 481+50.00

MIA-41-10.32

S:\CIN\4300-4399\4354\004\Drawings\CAD\110253\roadway\sheets\10253XS001.dgn 10/1/2021 4:38:37 PM Allisonw

SEEDING	
END WIDTH	SQ. YDS.

℄ W. MAIN ST.

ITEM 204 - EXCAVATION OF UNSUITABLE SUBGRADE (12" DEEP)

EX R/W

EX. 14" X 20" DUCT BANK

EX. GAS (ABANDONED)

EX. 2" GAS

END PROJECT

EX. 8" SANITARY

482+00.00

835.05

EX. WATER

EX. 12" STORM

EX. TELECOM

EX R/W

EX. ELECTRIC

EX. FIBER OPTIC

EX. 14" X 20" DUCT BANK

EX. 8" GAS

840
835
830
825

60 50 40 30 20 10 0 10 20 30 40 50

END AREA		VOLUME	
CUT	FILL	CUT	FILL
0	0		
		24	0
0	0	24	0
TOTAL CARRIED TO GENERAL SUMMARY		4645	362

CALCULATED JTO

CHECKED JCH

CROSS SECTIONS W. MAIN ST.
STA. 482+00.00

MIA-41-10.32

85
194

S:\CIN\4300--4399\4354\004\Drawings\CAD\110253\roadway\sheets\10253XS001.dgn 10/1/2021 4:38:38 PM Allisonw

D101 C.B. No. 3
STA 10+86, 18.3' Rt.
El GRATE = 885.31

℄ N. WESTON RD.

90°00'00"

90°00'00"

W. MAIN ST. STA. 444+17.62 =
N. WESTON RD. STA. 10+00.00

W. MAIN ST. STA. 444+02.17 =
HAWORTH CT. STA. 3+12.39

℄ W. MAIN ST.

90°37'31"

℄ HAWORTH CT.

D101 C.B. No. 3
STA 10+86, 16.5' Lt.
El GRATE = 885.15

TYPE 6 CURB,
AS PER PLAN

1 STA. 10+69.76, 51.8' RT.
STA. 20+51.79, 20.3' LT.

885.75 (W), +23.98, 87.6' LT.

885.33 (W), +18.47, 84.3' LT.

885.34, +21.61, 78.0' LT.

℄ N. WESTON RD.

N. WESTON ROAD

885.31 (M.E.)

14.2'

885.34

15.3'

885.38

14:1

64:1

885.82 (W), +26.56, 83.3' LT.
STA. 19+59.76, 28.0' RT.
STA. 20+27.99, 10.3' LT. 2

885.02

5.2'

885.30

6.9'

℄ COVENT RD.

N 89° 54' 58" E

COVENT ROAD

885.43

885.46 (W), +40.53, 69.8' LT.

885.89 (TC), +45.08, 66.1' LT.

885.38 (W), +43.11, 65.5' LT.

885.40 (W)
+36.23, 67.2' LT.

885.40 (W)
+38.57, 63.3' LT.

885.92 (TC)
+36.59
62.6' LT.

885.42

885.42

5.7'

23.8'

884.99
(M.E.)

885.21 (W)

885.28 (M.E.)
+65.45, 48.6 LT.

STA. 444+63.48, 37.5' LT.
STA. 10+37.57, 45.8' RT. 3

885.30 (M.E.)
+67.90, 44.5' LT.

884.95

8.3'

885.02

884.88

6.0%

64:1

64:1

885.30 (W)

885.25 (W)

4.84

884.66 (W)
+49.99, 36.3 LT

884.70

885.18 (W)
+58.99, 36.5 LT

884.51

884.48

884.33

884.19

11.9'

883.94

883.68

883.43

883.20

884.82
+06.77
37.8' LT.

R=60'

884.56
+28.05
34.4' LT.

1.6'

884.59
+31.43
33.2' LT.

R=100'

5'

4'

883.87
+64.80
27.5' LT.

PI Sta. 10+49.41

20

℄ N. WESTON RD.

N 30° 33" E

884.97

884.96
+58.99, 36.5 LT

884.84

886.30

885.78

885.27

℄ W. MAIN ST.

W. MAIN STREET

443

444

445

889.19

888.37

887.62

886.94

886.34

885.81

885.35

884.97

884.66

884.39

884.13

883.87

883.65

10

℄ HAWORTH CT.

3

PI Sta. 445+05.74

D104 C.B. No. 3
STA 443+50, 34.3' Rt.
El GRATE = 886.22

17.2'

888.55

887.76

886.96

886.48

886.34

886.19

885.65

885.10

885.01

884.88

1.6'

884.63

884.45

884.21

883.90

883.62

883.36

883.09

882.86

14'

4'

7.36%

64:1

887.26 (W)

887.33 (W)

886.24 (W)

886.29 (W)
+48.62, 42.1 RT

886.13 (W)
+60.13, 38.2 RT

886.01 (W)
+66.95, 42.3

886.05

885.91

885.77

885.16 (W)

885.18

885.06

885.06 (W)

4.0'

885.22 (W)

885.10 (W)

885.34

885.15

1.1'

885.79

12.5'

884.92

885.16

884.55 (W)
+35.41, 40.9 RT

23.6'

884.80 (W)

884.88 (W)

4'

5'

64:1

2.65% AVG

5.0'

884.96 (W)

884.88 (W)
+40.99, 46.0 RT

884.77 (W)
+28.35, 45.6 RT

D106 C.B. No. 3
STA 2+39, 16.5' Lt.
El GRATE = 886.39

885.62 (W)

885.53 (M.E.)

6.1'

885.82
(M.E.)

HAWORTH COURT

885.40

5.6'

1.5'

885.57
(M.E.)

D107 C.B. No. 3
STA 2+39, 15.2' Rt.
El GRATE = 885.43

STA. 443+41.53, 77.0' RT.
STA. 2+34.78, 59.8' LT. 4

STA. 444+50.22, 70.3' RT.
STA. 1+37.64, 49.0' RT. 5

NOTES:

1. ELEVATIONS ARE ON PAVEMENT UNLESS OTHERWISE NOTED
2. ELEVATIONS ALONG CURVES ARE SHOWN EVERY 10' UNLESS OTHERWISE NOTED.
3. M.E. = MATCH EXISTING
4. TC = TOP OF CURB
5. W = WALK

CURVE DATA FOR RADIUS RETURNS

CURVE NO.	RADIUS	INTERIOR ANGLE	LENGTH OF CURVE
1	20'	48°32'	16.94'
2	10'	89°52'	15.69'
3	15'	146°28'	38.34'
4	45'	84°52'	66.65'
5	35'	91°05'	55.64'

ALL DISTANCES ARE MEASURED TO THE EDGE OF PAVEMENT.

℄ N. WESTON RD.

89°58'24"

℄ COVENT RD.

149°19'02"

N. WESTON ROAD STA. 10+49.41 =
COVENT ROAD STA. 20+00.00

℄ N. WESTON RD.

HORIZONTAL SCALE IN FEET
0 5 10 20

CALCULATED JTO
CHECKED JCH

INTERSECTION DETAILS
WEST MAIN ST AND NORTH WESTON RD

MIA-41-10.32

86
194

S:\CIN\4300--4399\4354\004\Drawings\CAD\110253\roadway\sheets\110253G1001.dgn 10/1/2021 4:38:40 PM Allisonw

ITEM 608 - 7" CONCRETE WALK, AS PER PLAN (SEE DETAIL, SHEET 99.

ITEM 608 - CURB RAMP, AS PER PLAN, 7" CONCRETE

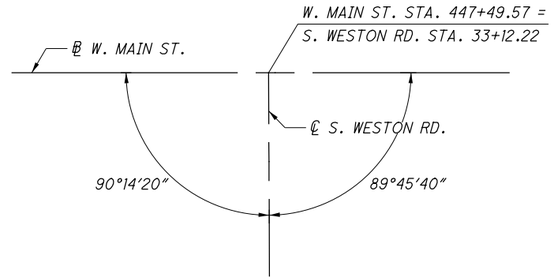

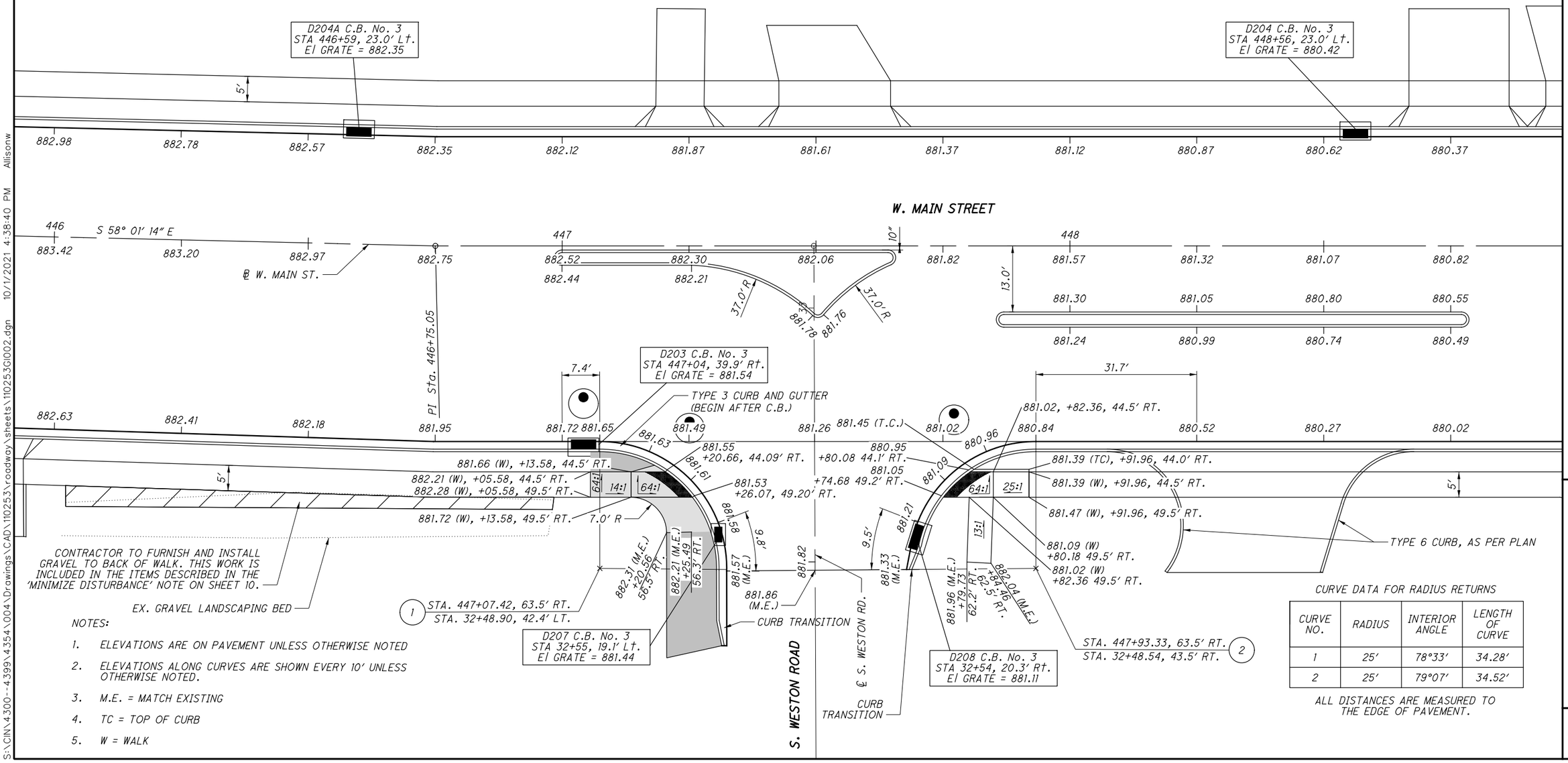

NOTES:

1. ELEVATIONS ARE ON PAVEMENT UNLESS OTHERWISE NOTED
2. ELEVATIONS ALONG CURVES ARE SHOWN EVERY 10' UNLESS OTHERWISE NOTED.
3. M.E. = MATCH EXISTING
4. TC = TOP OF CURB
5. W = WALK

CURVE DATA FOR RADIUS RETURNS

CURVE NO.	RADIUS	INTERIOR ANGLE	LENGTH OF CURVE
1	25'	78°33'	34.28'
2	25'	79°07'	34.52'

ALL DISTANCES ARE MEASURED TO THE EDGE OF PAVEMENT.

HORIZONTAL SCALE IN FEET
0 5 10 20

CALCULATED JTO
CHECKED JCH

INTERSECTION DETAILS
WEST MAIN ST AND SOUTH WESTON RD

MIA-41-10.32

87
194

S:\CIN\4300--4399\4354\004\Drawings\CAD\110253\roadway\sheets\110253GI002.dgn 10/1/2021 4:38:40 PM Allisonw

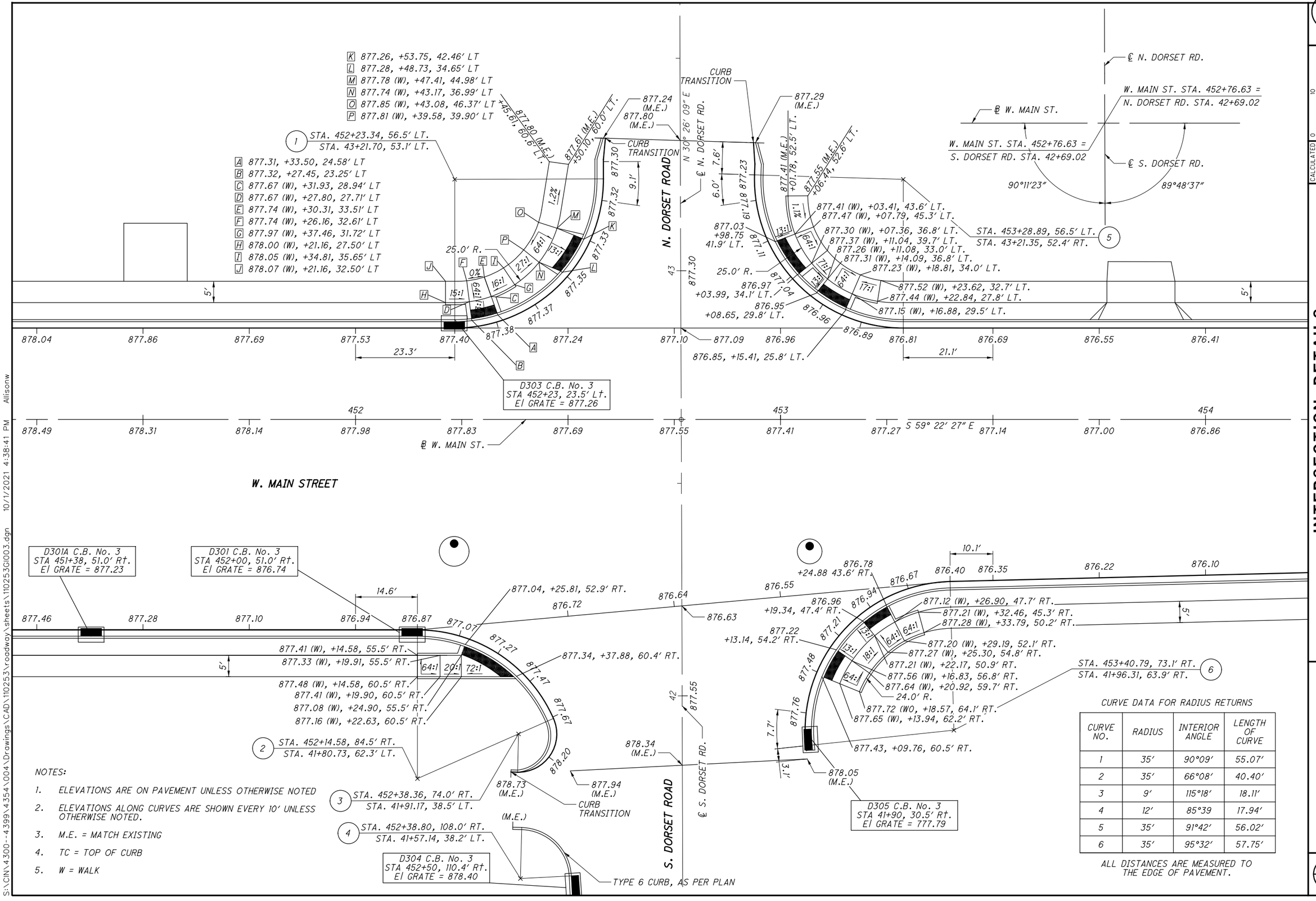

CURVE NO.	RADIUS	INTERIOR ANGLE	LENGTH OF CURVE
1	35'	90°09'	55.07'
2	35'	66°08'	40.40'
3	9'	115°18'	18.11'
4	12'	85°39	17.94'
5	35'	91°42'	56.02'
6	35'	95°32'	57.75'

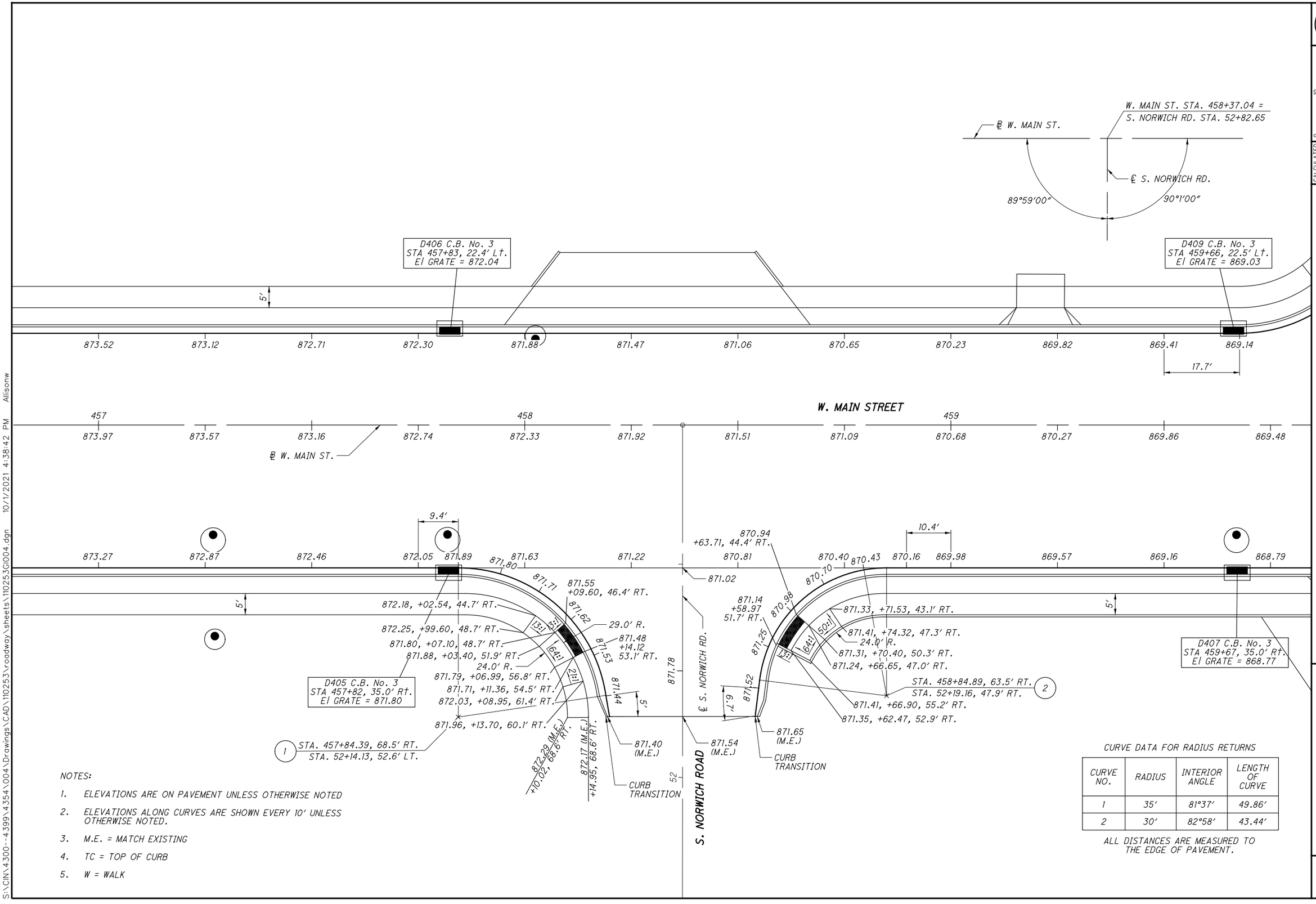

NOTES:

1. ELEVATIONS ARE ON PAVEMENT UNLESS OTHERWISE NOTED
2. ELEVATIONS ALONG CURVES ARE SHOWN EVERY 10' UNLESS OTHERWISE NOTED.
3. M.E. = MATCH EXISTING
4. TC = TOP OF CURB
5. W = WALK

CURVE DATA FOR RADIUS RETURNS

CURVE NO.	RADIUS	INTERIOR ANGLE	LENGTH OF CURVE
1	35'	81°37'	49.86'
2	30'	82°58'	43.44'

ALL DISTANCES ARE MEASURED TO THE EDGE OF PAVEMENT.

HORIZONTAL SCALE IN FEET
0 5 10 20

CALCULATED JTO
CHECKED JCH

INTERSECTION DETAILS
WEST MAIN ST AND SOUTH NORWICH RD

MIA-41-10.32

S:\CIN\4300-4399\4354\004\Drawings\CAD\110253\roadway\sheets\110253GI004.dgn 10/1/2021 4:38:42 PM Allisonw

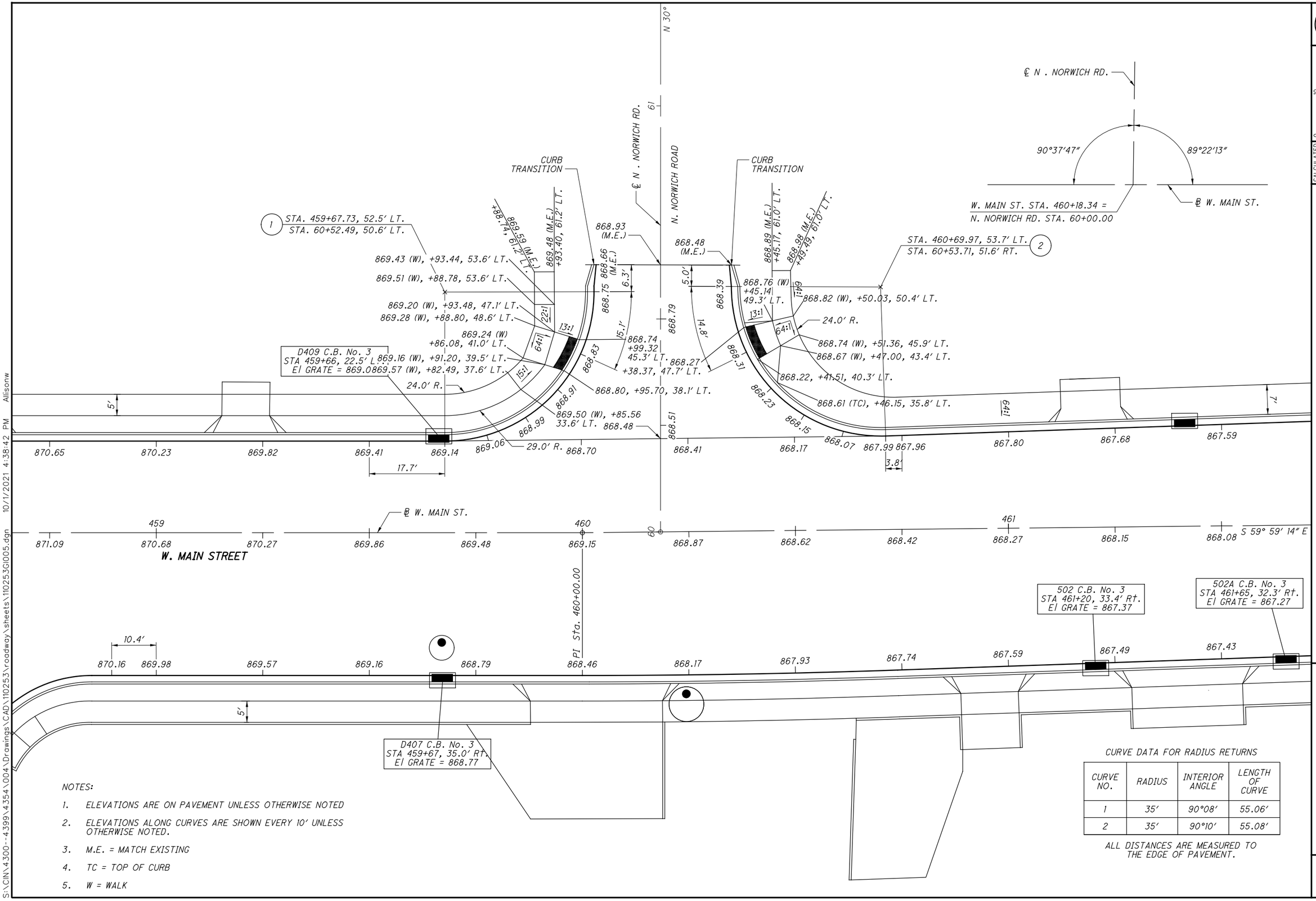

NOTES:

1. ELEVATIONS ARE ON PAVEMENT UNLESS OTHERWISE NOTED
2. ELEVATIONS ALONG CURVES ARE SHOWN EVERY 10′ UNLESS OTHERWISE NOTED.
3. M.E. = MATCH EXISTING
4. TC = TOP OF CURB
5. W = WALK

CURVE DATA FOR RADIUS RETURNS

CURVE NO.	RADIUS	INTERIOR ANGLE	LENGTH OF CURVE
1	35′	90°08′	55.06′
2	35′	90°10′	55.08′

ALL DISTANCES ARE MEASURED TO THE EDGE OF PAVEMENT.

HORIZONTAL SCALE IN FEET
0 5 10 20

CALCULATED JTO
CHECKED JCH

INTERSECTION DETAILS
WEST MAIN ST AND N NORWICH RD

MIA-41-10.32

S:\CIN\4300-4399\4354\004\Drawings\CAD\110253\roadway\sheets\110253GI005.dgn 10/1/2021 4:38:42 PM Allisonw

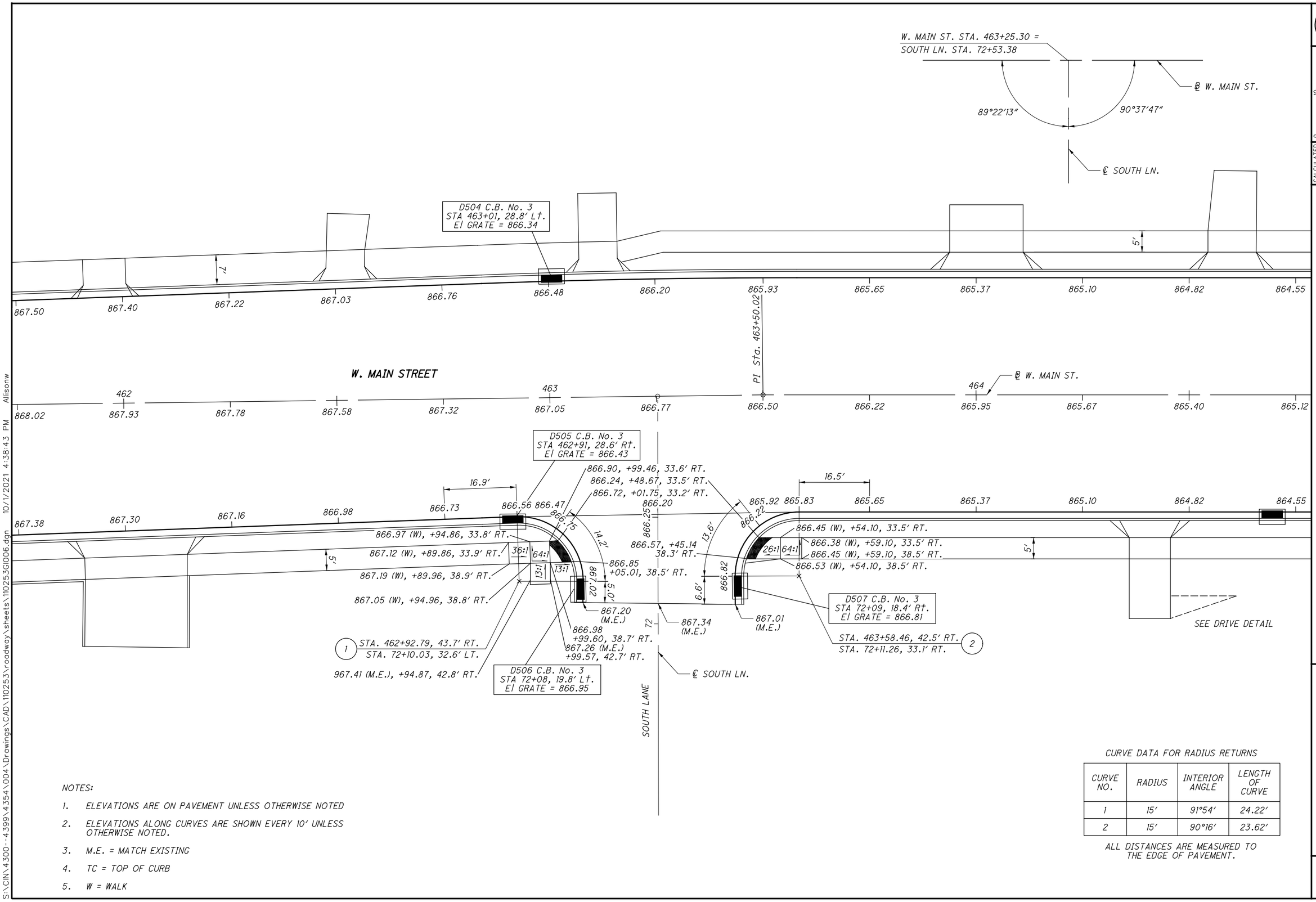

NOTES:

1. ELEVATIONS ARE ON PAVEMENT UNLESS OTHERWISE NOTED
2. ELEVATIONS ALONG CURVES ARE SHOWN EVERY 10' UNLESS OTHERWISE NOTED.
3. M.E. = MATCH EXISTING
4. TC = TOP OF CURB
5. W = WALK

CURVE DATA FOR RADIUS RETURNS

CURVE NO.	RADIUS	INTERIOR ANGLE	LENGTH OF CURVE
1	15'	91°54'	24.22'
2	15'	90°16'	23.62'

ALL DISTANCES ARE MEASURED TO THE EDGE OF PAVEMENT.

HORIZONTAL SCALE IN FEET
0 5 10 20

CALCULATED JTO
CHECKED JCH

INTERSECTION DETAILS
WEST MAIN ST AND SOUTH LN

MIA-41-10.32

91
194

S:\CIN\4300-4399\4354\004\Drawings\CAD\110253\roadway\sheets\110253GI006.dgn 10/1/2021 4:38:43 PM Allisonw

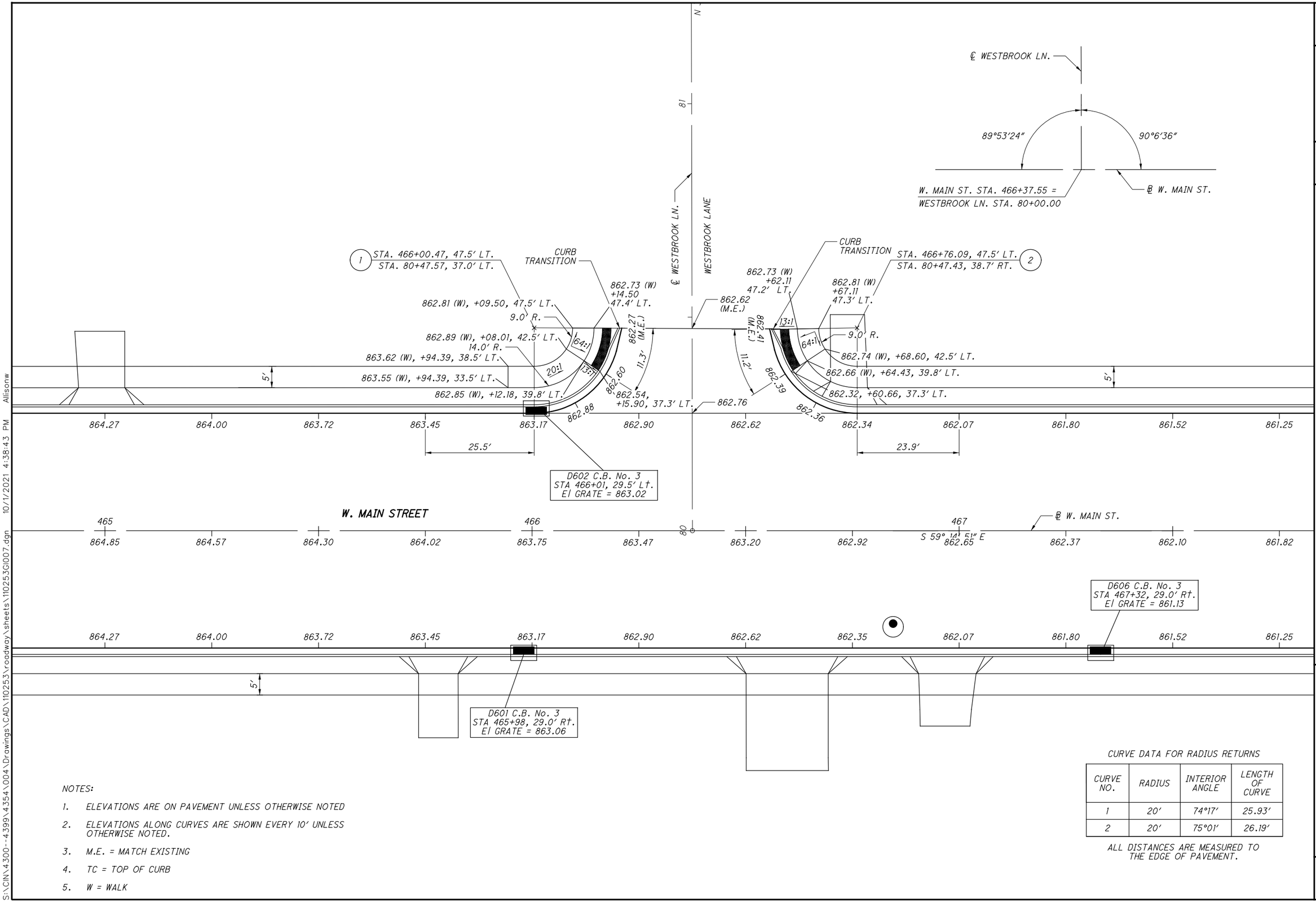

864.27	864.00	863.72	863.45	863.17	862.90	862.62	862.34	862.07	861.80	861.52	861.25

465	466	467
864.85	864.57	864.30	864.02	863.75	863.47	863.20	862.92	862.65	862.37	862.10	861.82

864.27	864.00	863.72	863.45	863.17	862.90	862.62	862.35	862.07	861.80	861.52	861.25

NOTES:

1. ELEVATIONS ARE ON PAVEMENT UNLESS OTHERWISE NOTED
2. ELEVATIONS ALONG CURVES ARE SHOWN EVERY 10' UNLESS OTHERWISE NOTED.
3. M.E. = MATCH EXISTING
4. TC = TOP OF CURB
5. W = WALK

CURVE DATA FOR RADIUS RETURNS

CURVE NO.	RADIUS	INTERIOR ANGLE	LENGTH OF CURVE
1	20'	74°17'	25.93'
2	20'	75°01'	26.19'

ALL DISTANCES ARE MEASURED TO THE EDGE OF PAVEMENT.

HORIZONTAL SCALE IN FEET
0 5 10 20

CALCULATED JTO
CHECKED JCH

INTERSECTION DETAILS
WEST MAIN ST AND WESTBROOK LN

MIA-41-10.32

10/1/2021 4:38:43 PM Allisonw
S:\CIN\4300-4399\4354\004\Drawings\CAD\110253\roadway\sheets\110253GI007.dgn

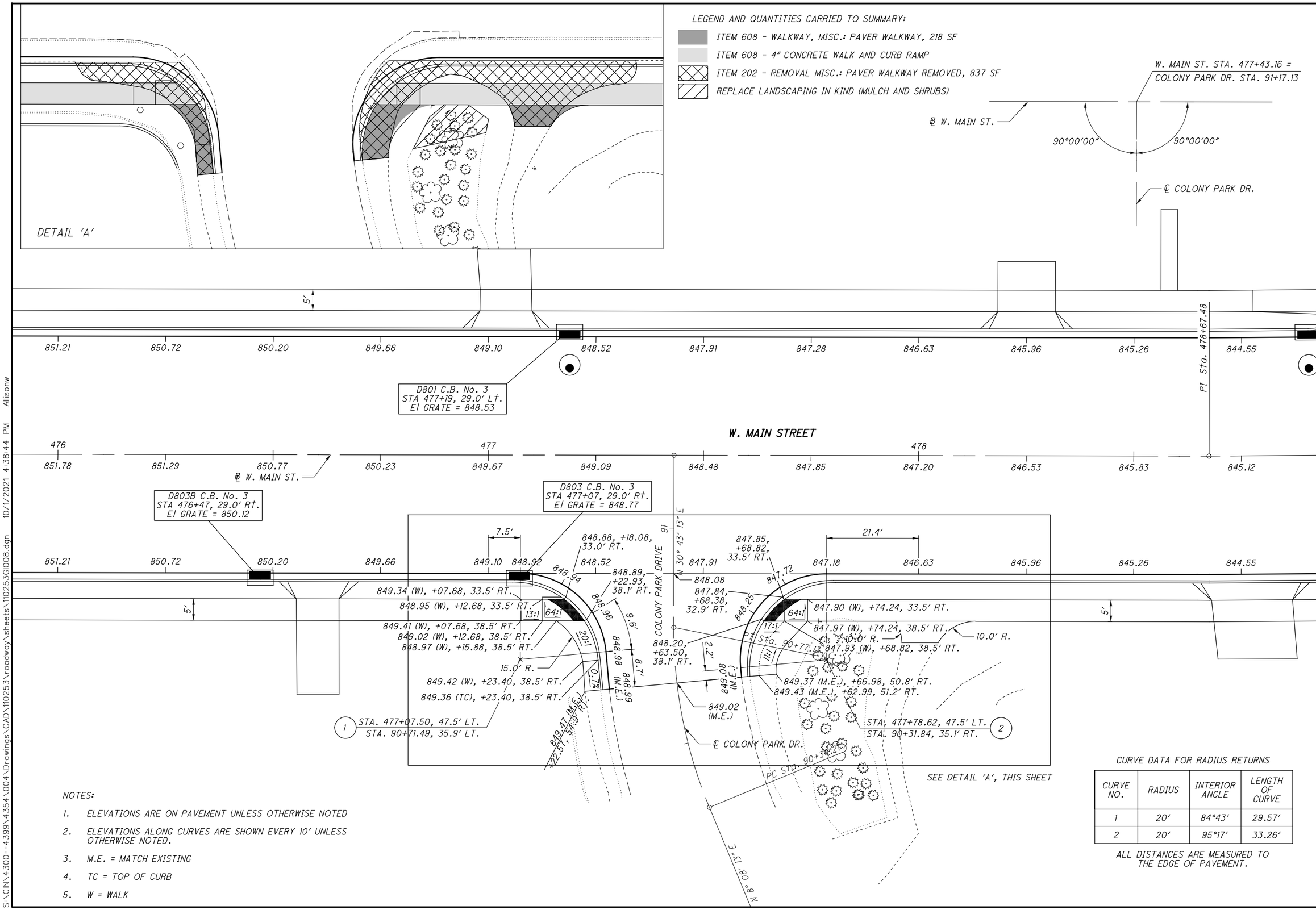

NOTES:

1. ELEVATIONS ARE ON PAVEMENT UNLESS OTHERWISE NOTED
2. ELEVATIONS ALONG CURVES ARE SHOWN EVERY 10' UNLESS OTHERWISE NOTED.
3. M.E. = MATCH EXISTING
4. TC = TOP OF CURB
5. W = WALK

CURVE DATA FOR RADIUS RETURNS

CURVE NO.	RADIUS	INTERIOR ANGLE	LENGTH OF CURVE
1	20'	84°43'	29.57'
2	20'	95°17'	33.26'

ALL DISTANCES ARE MEASURED TO THE EDGE OF PAVEMENT.

HORIZONTAL SCALE IN FEET 0 5 10 20

CALCULATED JTO
CHECKED JCH

INTERSECTION DETAILS
WEST MAIN ST AND COLONY PARK DR

MIA-41-10.32

S:\CIN\4300--4399\4354\004\Drawings\CAD\110253\roadway\sheets\110253GI008.dgn 10/1/2021 4:38:44 PM Allisonw

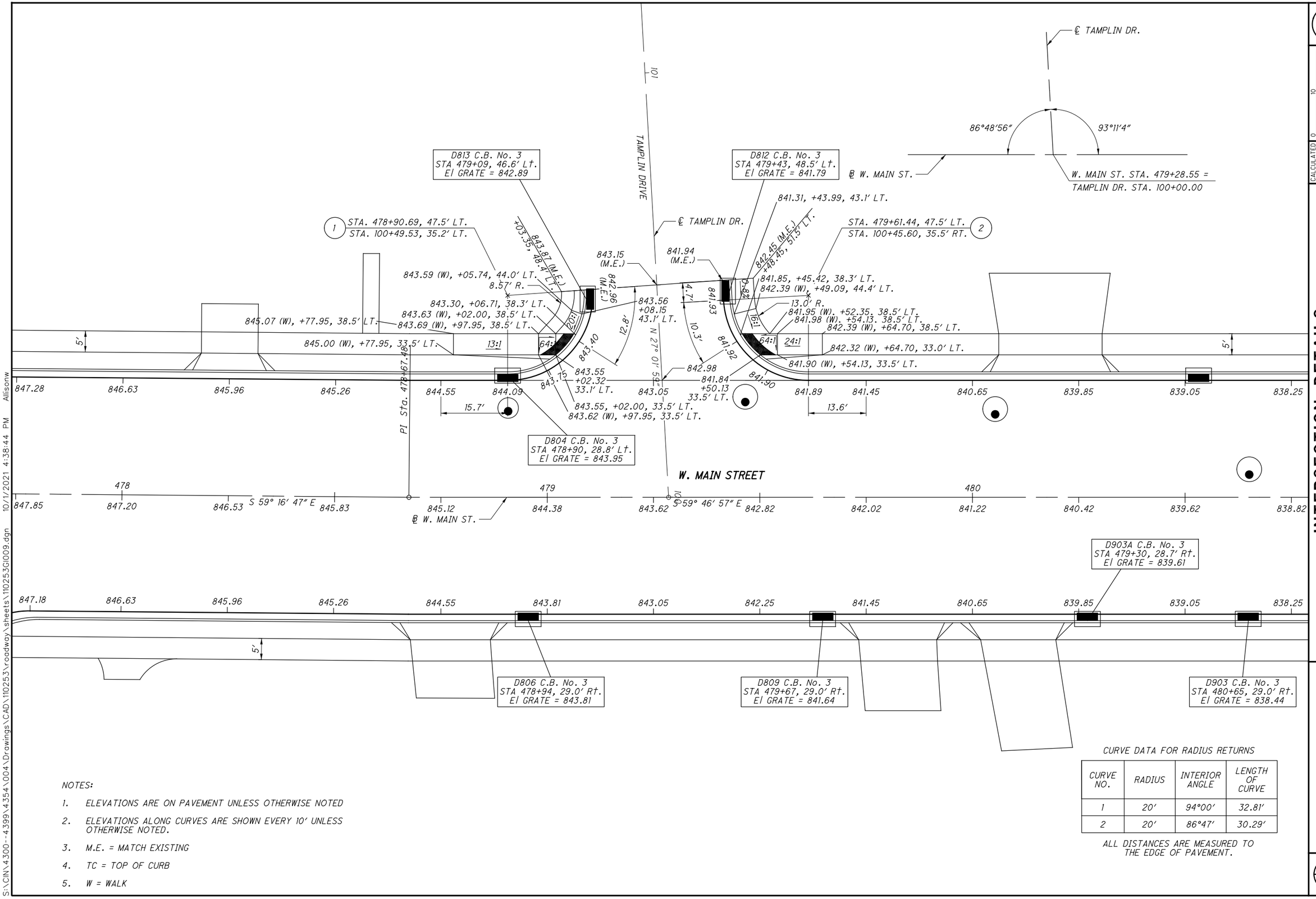

CURVE DATA FOR RADIUS RETURNS

CURVE NO.	RADIUS	INTERIOR ANGLE	LENGTH OF CURVE
1	20'	94°00'	32.81'
2	20'	86°47'	30.29'

ALL DISTANCES ARE MEASURED TO THE EDGE OF PAVEMENT.

NOTES:

1. ELEVATIONS ARE ON PAVEMENT UNLESS OTHERWISE NOTED
2. ELEVATIONS ALONG CURVES ARE SHOWN EVERY 10' UNLESS OTHERWISE NOTED.
3. M.E. = MATCH EXISTING
4. TC = TOP OF CURB
5. W = WALK

HORIZONTAL SCALE IN FEET
0 5 10 20

CALCULATED JTO
CHECKED JCH

INTERSECTION DETAILS
WEST MAIN ST AND TAMPLIN DR

MIA-41-10.32

S:\CIN\4300--4399\4354\004\Drawings\CAD\110253\roadway\sheets\110253GI009.dgn 10/1/2021 4:38:44 PM Allisonw

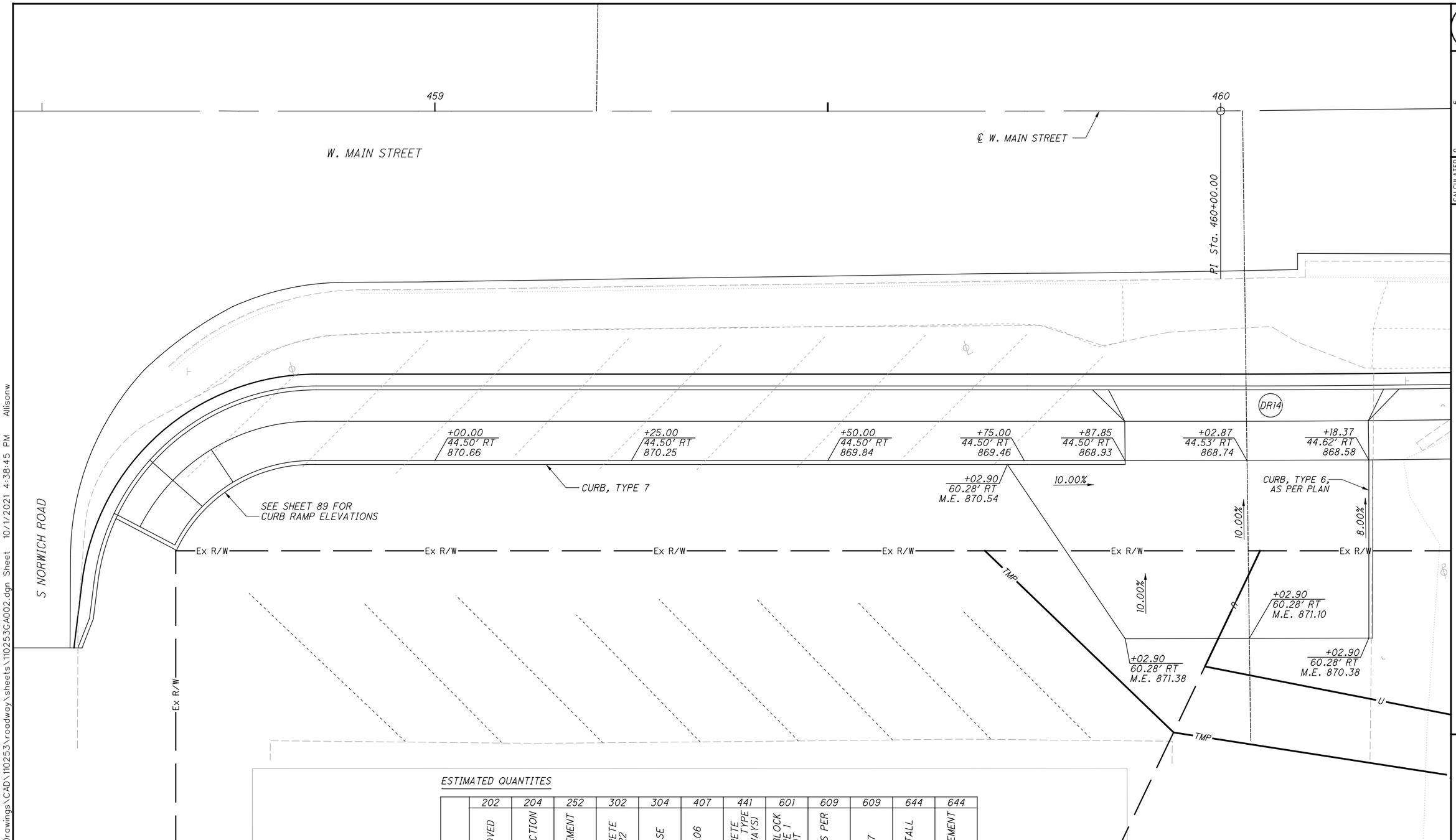

VEROS LLc
OR 191 - PG 407
D08-045220 0.51 AC +/-

ESTIMATED QUANTITES

SHEET NO.	202 PAVEMENT REMOVED	204 SUBGRADE COMPACTION	252 FULL DEPTH PAVEMENT SAWING	302 ASPHALT CONCRETE BASE, PG64-22	304 AGGREGATE BASE	407 TACK COAT (0.06 GAL/SY)	441 ASPHALT CONCRETE SURFACE COURSE, TYPE 1, (448), (DRIVEWAYS)	601 TIED CONCRETE BLOCK MAT WITH TYPE 1 UNDERLAYMENT	609 CURB, TYPE 6, AS PER PLAN	609 CURB, TYPE 7	644 PARKING LOT STALL MARKINGS	644 REMOVAL OF PAVEMENT MARKING
	SY	SY	FT	CY	CY	GAL	CY	SY	FT	FT	FT	FT
95	300.0		178.0							135.0		
96	285.0	95.0	180.0	3.5	16.0	6.0	13.0	25.0	33.0	88.0	72.0	18.0
QUANTITES CARRIED TO GENERAL SUMMARY	585	95	358	4	16	6	13	25	33	223	72	18

NOTES:

1. ELEVATIONS ARE AT FACE OF CURB UNLESS OTHERWISE NOTED
3. MATCH EXISTING PARKING LOT ELEVATION AT THE BACK OF CURB
4. SAWCUT EXISTING PARKING LOT PAVEMENT AT THE BACK OF THE PROPOSED CURB. PROVIDE A CLEAN EDGE TO POUR CURB AGAINST.
5. SEE TYPE 6 CURB TAPER DETAIL ON SHEET 97 FOR TERMINATION OF CURB ALONG DRIVEWAYS

HORIZONTAL SCALE IN FEET
0 3 6 12

CALCULATED JNG
CHECKED JCH

PARKING LOT DETAILS
1408 W MAIN STREET

MIA-41-10.32

S:\CIN\4300--4399\4354\004\Drawings\CAD\110253\roadway\sheets\110253GA002.dgn Sheet 10/1/2021 4:38:45 PM Allisonw

461

W. MAIN STREET

℄ W. MAIN STREET

S 59° 59′ 14″ E

462

DR15

DR17

DR19

+63.82
44.23′ RT
868.54

+88.52
43.66′ RT
868.07

+95.27
43.50′ RT
868.06

+02.01
43.34′ RT
868.03

+28.66
42.71′ RT
867.97

+41.65
42.40′ RT
867.95

+61.55
42.09′ RT
867.91

+90.48
41.24′ RT
867.82

+63.80
44.73′ RT
M.E. 868.75

CURB, TYPE 7

+88.03
44.17′ RT
868.89

5′x5′ TIED CONCRETE BLOCK MAT

+63.64
49.19′ RT
M.E. 868.98

CURB, TYPE 6, AS PER PLAN

+88.71
51.84′ RT
M.E. 869.05

12.00%

+95.46
51.66′ RT
M.E. 869.04

+02.21
51.52′ RT
M.E. 869.01

CURB, TYPE 7

CURB, TYPE 6, AS PER PLAN

REMOVE PARKING STALL MARKINGS

CURB, TYPE 6, AS PER PLAN

+28.77
47.33′ RT
M.E. 868.43

10.00%

+41.76
47.02′ RT
M.E. 868.41

CURB, TYPE 6, AS PER PLAN

+54.76
46.71′ RT
M.E. 868.37

CURB, TYPE 7

CURB, TYPE 6, AS PER PLAN

10.00%

Ex R/W

Ex R/W

Ex R/W

Ex R/W

Ex R/W

Ex R/W

+88.66
56.95′ RT
M.E. 869.21

CURB, TYPE 6, AS PER PLAN

TMP

PARKING STALL MARKINGS
18′ LONG SPACED 9′ APART

+62.22
82.16′ RT
M.E. 869.59

+79.74
81.74′ RT
M.E. 869.72

TMP

TMP

+90.09
56.94′ RT
M.E. 869.45

TMP

DOUGLAS D. & REBECCA R. FRIEND
DB 589 - PG 569
D08-045280 0.14 AC +/-

THIRD SAVING & LOAN COMPANY
1314 W. MAIN ST.
D08-045300

LOCAR REAL ESTATES LLC
20180R - 05261

NOTES:

1. ELEVATIONS ARE AT FACE OF CURB UNLESS OTHERWISE NOTED
3. MATCH EXISTING PARKING LOT ELEVATION AT THE BACK OF CURB
4. SAWCUT EXISTING PARKING LOT PAVEMENT AT THE BACK OF THE PROPOSED CURB. PROVIDE A CLEAN EDGE TO POUR CURB AGAINST.
5. SEE TYPE 6 CURB TAPER DETAIL ON SHEET 97 FOR TERMINATION OF CURB ALONG DRIVEWAYS

N

0 2.5 5 10
HORIZONTAL SCALE IN FEET

CALCULATED JNG
CHECKED JCH

PARKING LOT DETAILS
1374 W MAIN STREET

MIA-41-10.32

4300--4399\4354\004\Drawings\CAD\110253\roadway\sheets\110253GA001.dgn Sheet 10/1/2021 4:38:46 PM Allisonw

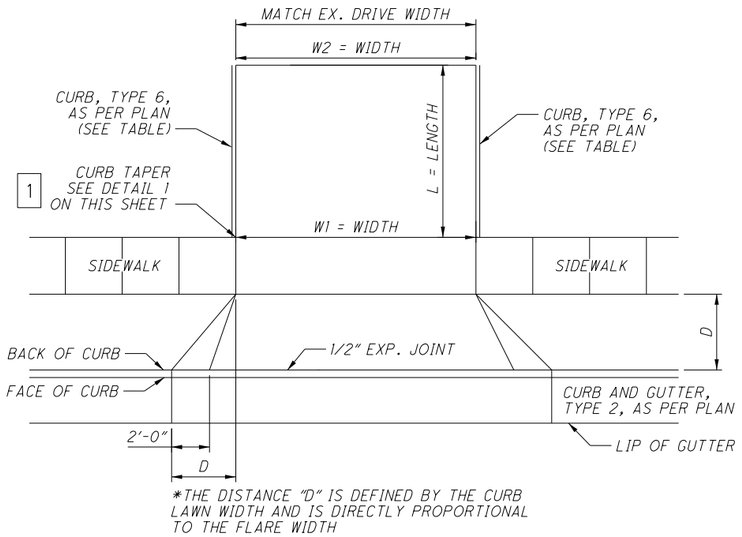

*THE DISTANCE "D" IS DEFINED BY THE CURB LAWN WIDTH AND IS DIRECTLY PROPORTIONAL TO THE FLARE WIDTH

DRIVEWAY DETAIL

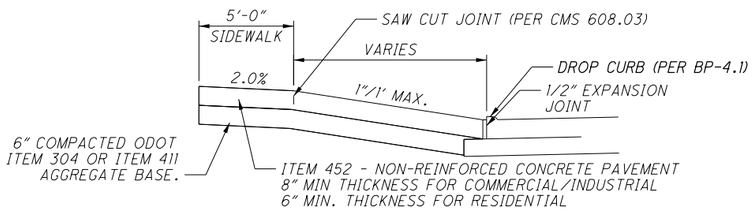

DRIVE APRON DETAIL

RESIDENTIAL DRIVEWAY BUILDUP

CONCRETE DRIVE: ITEM 452 - 6" NON-REINFORCED CONCRETE PAVEMENT

ASPHALT DRIVE: ITEM 441 - 1¼" AC SURFACE COURSE, TYPE 1, (446), PG64-22
ITEM 407 - TACK COAT
ITEM 302 - 3½" ASPHALT CONCRETE BASE, PG64-22

GRAVEL DRIVE: ITEM 304 - 8" AGGREGATE BASE

COMMERCIAL DRIVEWAY BUILDUP

CONCRETE DRIVE: ITEM 452 - 8" NON-REINFORCED CONCRETE PAVEMENT

ASPHALT DRIVE: ITEM 441 - 1¼" AC SURFACE COURSE, TYPE 1, (446), PG64-22
ITEM 407 - TACK COAT
ITEM 302 - 5" ASPHALT CONCRETE BASE, PG64-22

NOTES

1. JOINTS: IMPRESSED JOINTS FOR PORTLAND CEMENT CONCRETE DRIVEWAYS SHALL BE ¼" MINIMUM WIDTH BY 3"± DEPTH.
2. IMPRESSED JOINTS WITHOUT TIE BARS SHALL BE PLACED IN PORTLAND CEMENT CONCRETE DRIVEWAYS BEYOND THE FLARE APRON AT INTERVALS MATCHING EXISTING JOINT SPACING AND NOT TO EXCEED 10'.
3. FOR DRIVEWAYS THAT CANNOT BE CLOSED FOR A SIGNIFICANT DURATION, QUANTITIES FOR EARLY STRENGTH CONCRETE HAVE BEEN PROVIDED FOR USE AT THE ENGINEER'S DIRECTION. THE FOLLOWING ESTIMATED QUANTITIES HAVE BEEN CARRIED TO THE GENERAL SUMMARY FOR THIS USE:

ITEM 452 - 6" NON-REINFORCED CONCRETE, CLASS QC MS 500 SY

ITEM 452 - 8" NON-REINFORCED CONCRETE, CLASS QC MS 1,200 SY

SHEET NO.	DRIVE NO.	STATION	SIDE	DRIVE MATERIAL	DRIVE TYPE	DRIVE ANGLE	DRIVEWAY LENGTH "L"	WIDTH "W"	DRIVE WIDTH "W2"	CADD GENERATED SURFACE AREA	202 PAVEMENT REMOVED	202 CURB REMOVED	204 SUBGRADE COMPACTION	302 ASPHALT CONCRETE BASE, PG64-22	304 AGGREGATE BASE	407 TACK COAT (0.06 GAL/SY)	441 ASPHALT CONCRETE SURFACE COURSE, TYPE 1, (448), (DRIVEWAYS)	452 6" NON-REINFORCED CONCRETE	452 8" NON-REINFORCED CONCRETE	609 CURB, TYPE 6, AS PER PLAN
						DD-MM-SS	FT.	FT.	FT.	SF	SY	FT	SY	CY	CY	GAL	CY	SY	SY	FT
39	DR1	444+97	RT.	ASPH.	COMM.	90-00-00	11.5	35.8	35.8	748.4	161.5		83.2	6.3	13.9	5.5	1.6		37.6	
40	DR2	445+85	RT.	ASPH.	COMM.	91-39-43	10.6	19.3	19.3	395.3	82.1	49.0	43.9	3.2	7.3	2.7	0.8		21.1	22.0
40	DR3	447+23	LT.	CONC.	RES.	90-39-25	14.2	9.5	9.5	236.7	18.7		26.3		4.4			11.3		
40	DR4	447+54	LT.	ASPH.	RES.	90-00-00	10.9	22.0	17.8	431.4	34.3		47.9	2.3	8.0	2.9	0.8	23.8		
40	DR5	448+54	RT.	ASPH.	COMM.	73-07-30	14.8	32.5	30.0	799.0	145.7	70.0	88.8	6.9	14.8	5.9	1.7			65.0
40	DR6	448+76	LT.	CONC.	RES.	90-00-00	14.2	19.7	19.7	472.9	38.9		52.5		8.8			21.4		
40	DR7	449+02	LT.	GRAV.	RES.	89-58-57	14.7	17.5	19.1	441.8	37.8		49.1		9.8			19.2		
41	DR8	450+32	LT.	ASPH.	RES.	89-18-48	2.0	18.7	18.7	222.7	12.4		24.7	0.4	4.1	0.5	0.1	20.5		
41	DR9	453+85	LT.	CONC.	RES.	90-00-00	4.6	16.0	14.8	231.2	15.0		25.7		4.3			17.8		
42	DR10	455+64	LT.	ASPH.	RES.	70-24-13	11.3	16.0	11.0	619.7	46.0		68.9	4.1	11.5	5.5	1.0		39.1	
42	DR11	455+79	LT.	ASPH.	COMM.	89-49-30	7.6	15.9	15.5										0.0	
42	DR12	458+31	LT.	ASPH.	COMM.	90-00-00	8.0	71.8	45.6	995.7	75.0	47.0	110.6	6.4	1.4	5.5	1.6		64.8	21.0
42	DR13	459+21	LT.	GRAV.	RES.	90-40-01	2.9	11.2	11.2	149.2	15.4		16.6		3.0			13.0		
43	DR14	460+03	RT.	ASPH.	COMM.	90-07-09	22.7	31.0	31.0	1168.7	179.4		129.9	13.4	3.3	11.5	3.3		33.7	23.0
43	DR15	460+98	RT.	ASPH.	COMM.	91-21-44	8.2	13.5	13.5	248.0	17.3		27.6	1.7	0.3	1.5	0.4		15.3	16.0
43	DR16	461+20	LT.	ASPH.	COMM.	88-38-16	2.8	14.0	14.0	146.8	10.3		16.3	0.6	2.7	0.5	0.2		11.9	
43	DR17	461+41	RT.	ASPH.	COMM.	91-21-44	4.6	26.0	26.0	370.2	10.4		41.1	0.9	6.9	0.7	0.2		35.0	9.0
43	DR18	461+96	LT.	ASPH.	COMM.	88-38-50	0.0	10.0	10.0	99.0	1.8		11.0	0.0	1.8	0.0	0.0		11.0	
43	DR19	462+03	RT.	ASPH.	COMM.	89-13-57	16.3	24.1	24.1	625.1	93.4		69.5	6.1	11.6	5.2	1.5		25.8	32.0
43	DR20	462+51	LT.	ASPH.	COMM.	92-06-09	8.5	9.0	10.0	152.7	18.5		17.0	1.2	2.8	1.1	0.3		8.0	
43	DR21	463+12	LT.	CONC.	RES.	89-42-59	11.4	9.0	9.0	174.7	27.5		19.4		3.2			8.0		
43	DR22	464+02	LT.	GRAV.	RES.	90-00-00	6.1	17.2	17.2	278.5	45.1		30.9		5.8			19.2		
43	DR23	464+41	RT.	ASPH.	RES.	90-00-00	14.0	9.7	9.7	240.4	40.9		26.7	1.5	5.5	1.8	0.5	11.7		
43	DR24	464+59	LT.	ASPH.	RES.	92-33-14	14.1	11.4	10.1	209.9	36.7		23.3	1.6	3.9	2.0	0.6	6.6		
43	DR25	464+99	LT.	ASPH.	RES.	90-00-00	8.2	10.8	11.7	184.2	28.6		20.5	1.0	3.4	1.3	0.4	10.0		
44	DR26	465+78	RT.	ASPH.	RES.	90-00-00	10.0	9.3	9.3	194.6	33.8		21.6	1.0	3.6	1.2	0.4	11.3		
44	DR27	466+60	RT.	ASPH.	RES.	90-00-00	17.7	19.2	19.2	523.3	80.8		58.1	3.7	9.7	4.5	1.3	20.3		
44	DR28	466+74	LT.	GRAV.	RES.	90-00-00	11.9	8.4	8.4	192.7	25.2		21.4		4.2			10.9		
44	DR29	466+97	RT.	ASPH.	RES.	90-00-00	7.3	12.6	12.1	224.2	34.6		24.9	1.0	4.2	1.2	0.3	15.1		
44	DR30	467+98	LT.	GRAV.	RES.	90-00-00	1.5	11.2	11.2	136.7	20.8		15.2		2.6			13.3		
44	DR31	468+47	RT.	ASPH.	RES.	109-35-10	20.7	10.1	10.8	326.1	48.6		36.2	2.4	6.0	2.9	0.8	12.0		
44	DR32	468+66	LT.	ASPH.	RES.	90-00-00	2.0	20.8	20.3	253.3	31.9		28.1	0.4	4.7	0.5	0.2	23.6		
44	DR33	469+28	LT.	CONC.	RES.	90-00-00	16.4	6.6	6.6	182.9	22.2		20.3		3.4			8.3		
44	DR34	469+30	RT.	ASPH.	RES.	105-54-25	9.4	10.9	10.9	309.7	48.1		34.4	2.1	5.7	2.6	0.7	13.0		
44	DR35	469+59	RT.	ASPH.	RES.	100-03-31	17.5	10.9	10.3	321.5	54.9		35.7	2.2	6.0	2.7	0.8	12.9		
44	DR36	469+79	LT.	CONC.	RES.	90-00-00	2.0	8.9	8.9	115.5	13.7		12.8		2.1			10.9		
45	DR37	470+30	LT.	CONC.	RES.	90-00-00	8.6	9.3	9.3	181.7	20.8		20.2		3.4			11.3		
45	DR38	470+78	LT.	CONC.	RES.	91-20-34	1.6	7.4	7.4	100.3	12.9		11.1		1.9			9.8		
45	DR39	471+18	RT.	ASPH.	RES.	84-56-28	14.8	11.1	11.1	274.7	47.8		30.5	1.7	5.1	2.1	0.6	12.9		
45	DR40	471+30	LT.	CONC.	RES.	91-20-34	4.3	12.1	12.1	176.5	20.3		19.6		3.3			13.8		
45	DR41	471+78	LT.	CONC.	RES.	91-20-34	4.3	7.3	7.3	120.5	15.5		13.4		2.2			9.9		
45	DR42	472+04	RT.	CONC.	RES.	88-39-26	4.5	16.3	16.3	231.8	35.5		25.8		4.3			18.0		
45	DR43	472+63	LT.	ASPH.	COMM.	90-00-00	8.8	22.1	22.1	410.7	53.5	31.0	45.6	3.0	7.6	2.6	0.7		24.1	18.0
45	DR44	473+07	RT.	CONC.	RES.	90-00-00	21.2	10.1	8.2	300.5	40.4		33.4		5.6			11.9		
45	DR45	473+60	RT.	CONC.	RES.	92-55-43	22.2	8.8	8.5	289.2	40.0		32.1		5.4			10.7		
45	DR46	473+85	LT.	ASPH.	RES.	90-00-00	10.5	9.5	9.5	204.4	27.5		22.7	1.1	3.8	1.3	0.4	11.6		
45	DR47	474+84	LT.	ASPH.	COMM.	89-52-51	5.0	10.6	10.6	166.1	25.5		18.5	0.8	3.1	0.7	0.2		12.5	
45	DR48	474+87	RT.	ASPH.	RES.	90-00-00	7.0	15.9	16.0	269.8	44.5		30.0	1.2	5.0	1.5	0.4	17.7		
46	DR49	475+07	LT.	GRAV.	RES.	90-00-00	6.8	12.5	12.5	214.6	28.1		23.8		4.5			14.6		
46	DR50	476+60	RT.	CONC.	RES.	90-00-00	17.2	9.9	9.8	274.6	41.6		30.5		5.1			11.8		
46	DR51	477+04	LT.	GRAV.	RES.	90-00-00	9.3	11.9	12.4	237.9	28.2		26.4		5.1			13.8		
46	DR52	478+25	LT.	ASPH.	RES.	90-00-00	6.6	13.3	13.3	224.4	27.4		24.9	1.0	4.2	1.2	0.3	15.1		
46	DR53	478+78	RT.	ASPH.	COMM.	90-00-00	8.7	18.5	18.2	348.4	52.8		38.7	2.5	6.5	2.2	0.6		20.8	
46	DR54	479+83	RT.	ASPH.	COMM.	90-00-00	11.7	18.1	17.8	391.5	56.9		43.5	3.2	7.3	2.8	0.8		20.2	
47	DR55	480+05	RT.	ASPH.	COMM.	99-44-08	21.1	17.5	16.7	532.4	59.2		59.2	5.5	9.9	4.7	1.4		19.6	
47	DR56	480+18	LT.	ASPH.	COMM.	90-00-00	14.2	24.3	28.5	609.6	72.9		67.7	5.8	11.3	5.0	1.4		26.0	
47	DR57	481+02	RT.	ASPH.	COMM.	92-58-33	21.4	20.3	19.3	629.7	84.4		70.0	6.5	11.7	5.7	1.6		22.9	
47	DR58	481+15	LT.	ASPH.	COMM.	90-00-00	0.0	27.9		269.2	37.5		29.9	0.0	5.0	0.0	0.0		29.9	
TOTALS CARRIED TO GENERAL SUMMARY											2480	197	2098	103	315	100	28	517	479	206

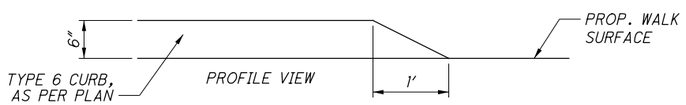

1 TYPE 6 CURB TAPER BEHIND SIDEWALK

THE WORK SHOWN IN THIS DETAIL SHALL BE PAID FOR UNDER ITEM 609 - CURB, TYPE 6, AS PER PLAN. THIS WORK SHALL BE PERFORMED AT ALL DRIVEWAYS THAT HAVE PROPOSED. CURB BEHIND BACK OF WALK.

CALCULATED EME
CHECKED JCH

DRIVEWAY DETAILS

MIA-41-10.32

S:\CIN\4300--4399\4354\004\Drawings\CAD\110253\roadway\sheets\110253GD001.dgn 10/1/2021 4:38:46 PM Alisonw

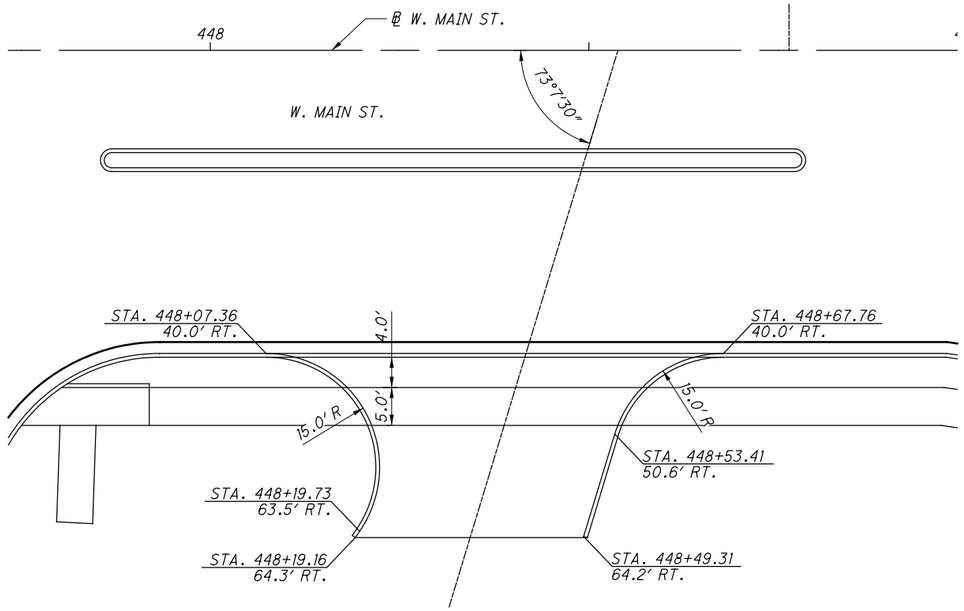

DR5 DETAIL

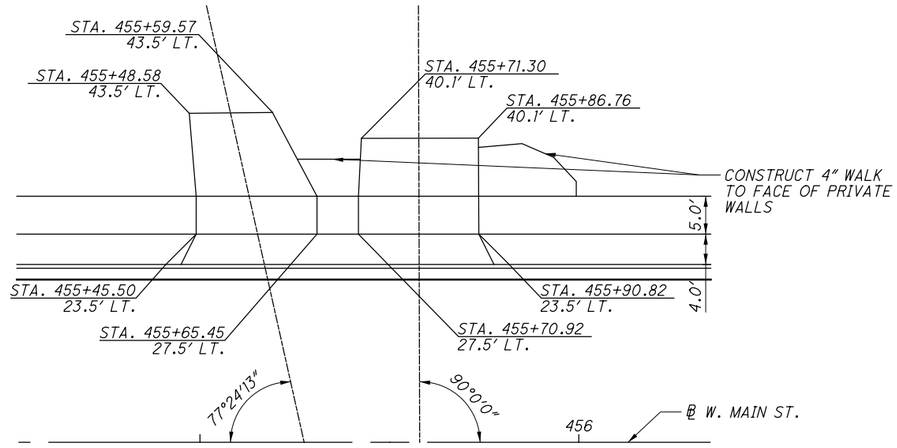

DR10/DR11 DETAIL

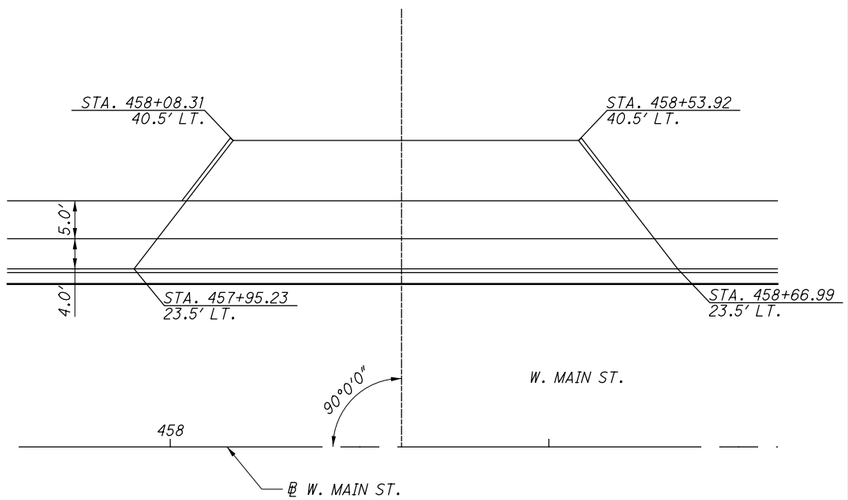

DR12 DETAIL

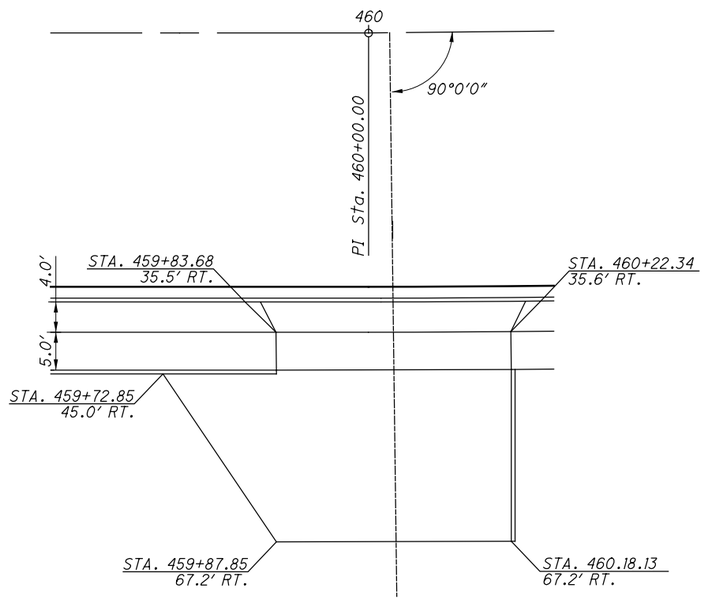

DR14 DETAIL

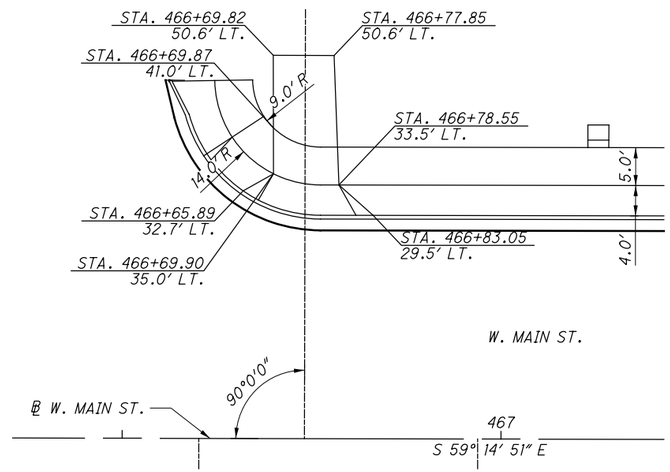

DR28 DETAIL

HORIZONTAL SCALE IN FEET
0 5 10 20

CALCULATED SLG
CHECKED JCH

DRIVEWAY DETAILS

MIA-41-10.32

98
194

\\strand.com\projects\CIN\4300-4399\4354\004\Drawings\CAD\110253\roadway\sheets\110253GD002.dgn 10/1/2021 4:38:55 PM Allisonw

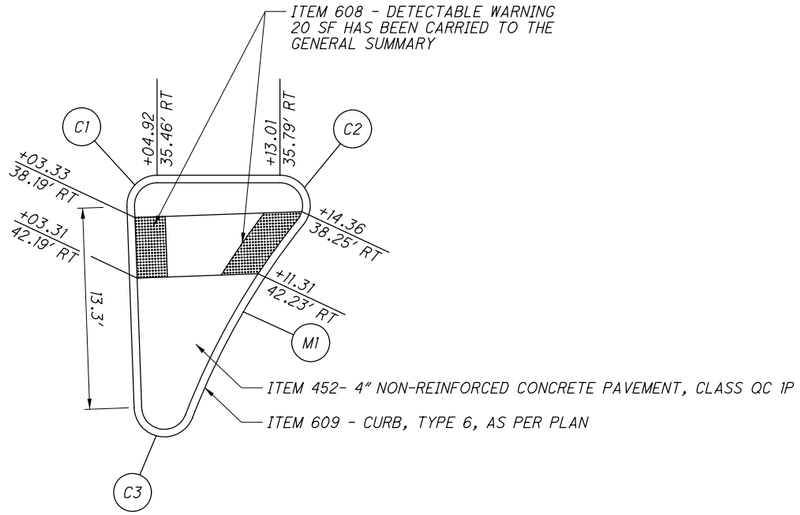

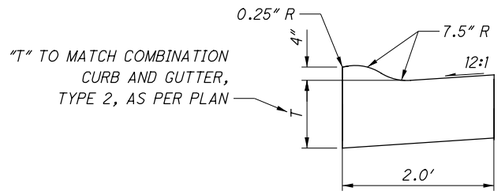

COMBINATION CURB AND GUTTER,
TYPE 3, AS PER PLAN

CURVE LAYOUT DATA					
NO.	RADIUS (FEET)	LENGTH (FEET)	CENTER POINT		
			BASELINE	STATION	OFFSET
C1	2.0	3.21	W. MAIN ST.	444+04.84	37.46' RT
C2	2.0	4.50	W. MAIN ST.	444+12.93	37.79' RT
C3	2.0	5.48	W. MAIN ST.	444+04.77	50.74' RT
C4	1.5	4.71	W. MAIN ST.	446+99.98	2.31' RT
C5	1.5	4.09	W. MAIN ST.	447+64.20	2.31' RT
C6	1.5	2.42	W. MAIN ST.	447+50.37	12.60' RT
C7	1.5	4.71	W. MAIN ST.	447+87.01	14.50' RT
C8	1.5	4.71	W. MAIN ST.	448+77.12	14.50' RT
M1	47.5	14.75			
M2	37.0	26.37			
M3	37.0	16.71			

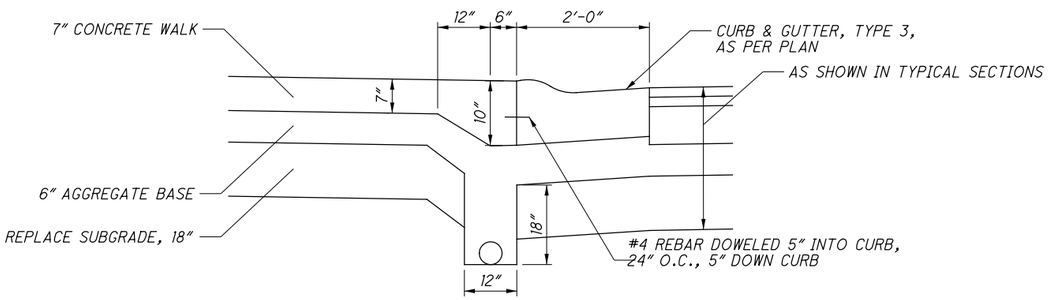

7" CONCRETE WALK, AS PER PLAN DETAIL

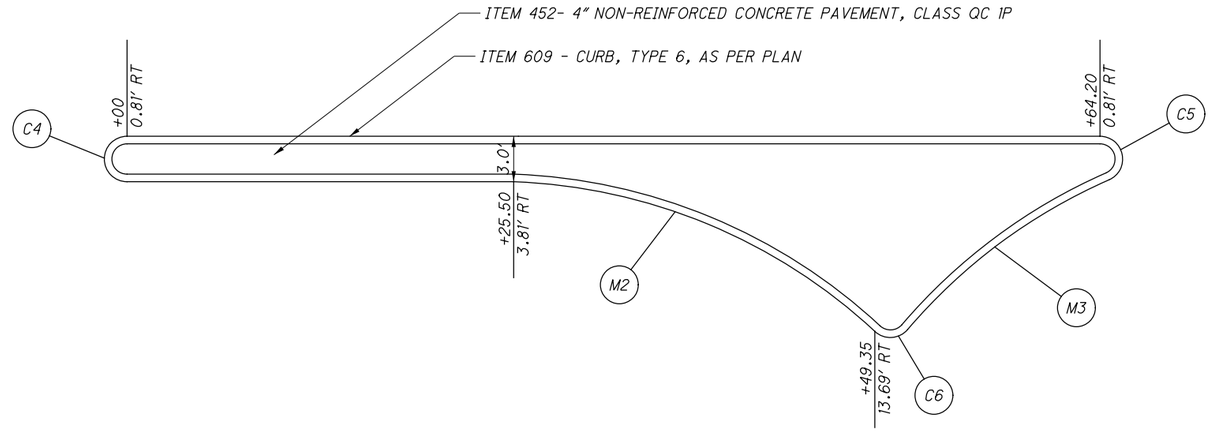

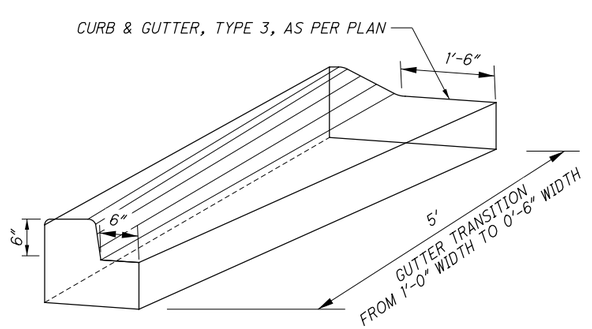

TYPE 3
CURB TRANSITION

THE WORK SHOWN IN THIS DETAIL SHALL BE PAID FOR UNDER ITEM 609 - COMBINATION CURB AND GUTTER, TYPE 3, AS PER PLAN.

HORIZONTAL SCALE IN FEET
0 2.5 5 10

CALCULATED JTO
CHECKED JCH

CONCRETE ISLAND DETAILS

MIA-41-10.32

S:\CIN\4300--4399\4354\004\Drawings\CAD\110253\roadway\sheets\110253GM001.dgn 10/1/2021 4:38:56 PM Allisonw

SEEDING	
END WIDTH	SQ. YDS.

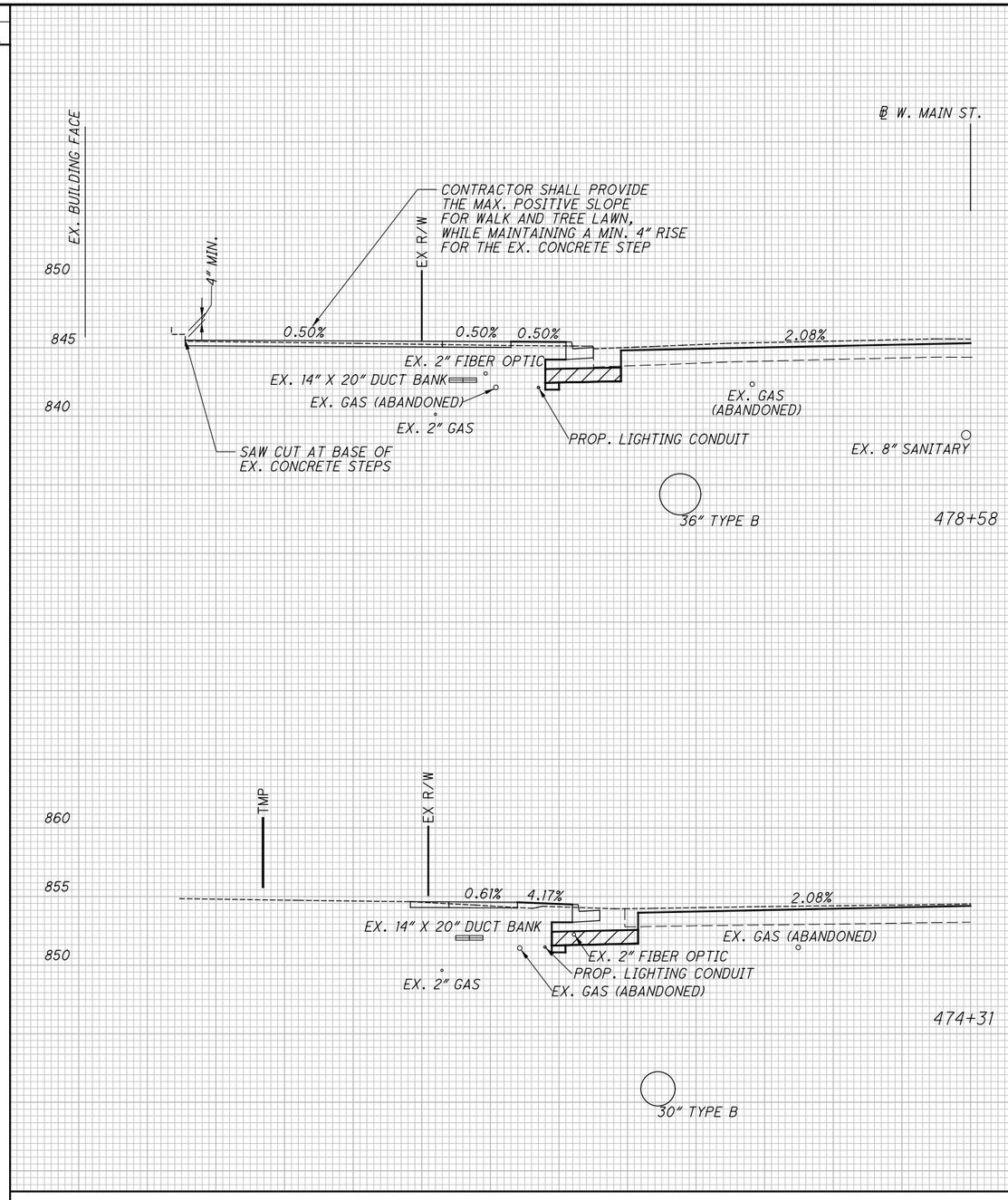

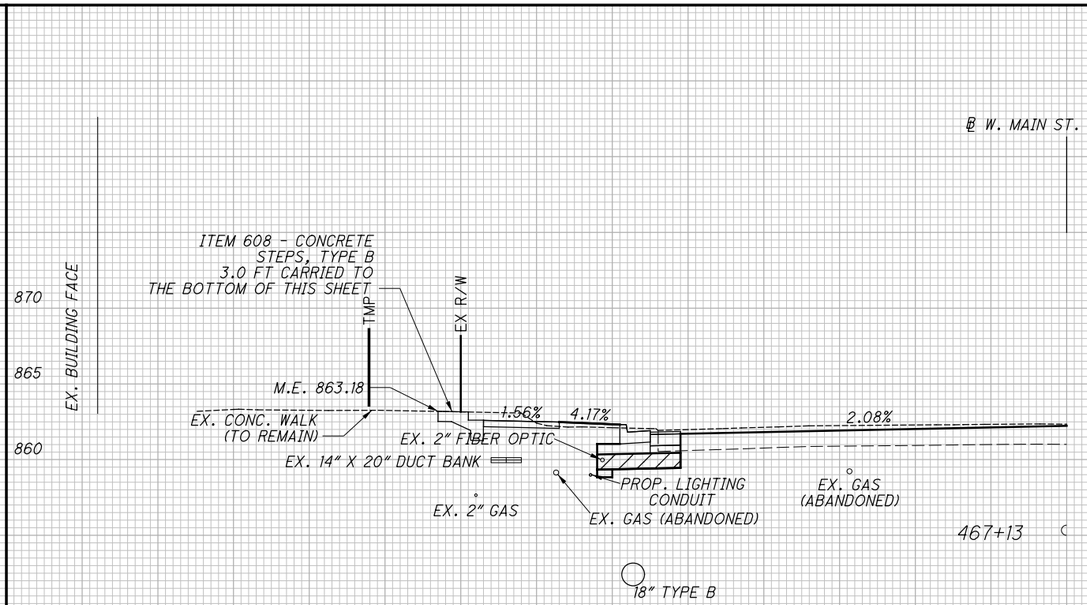

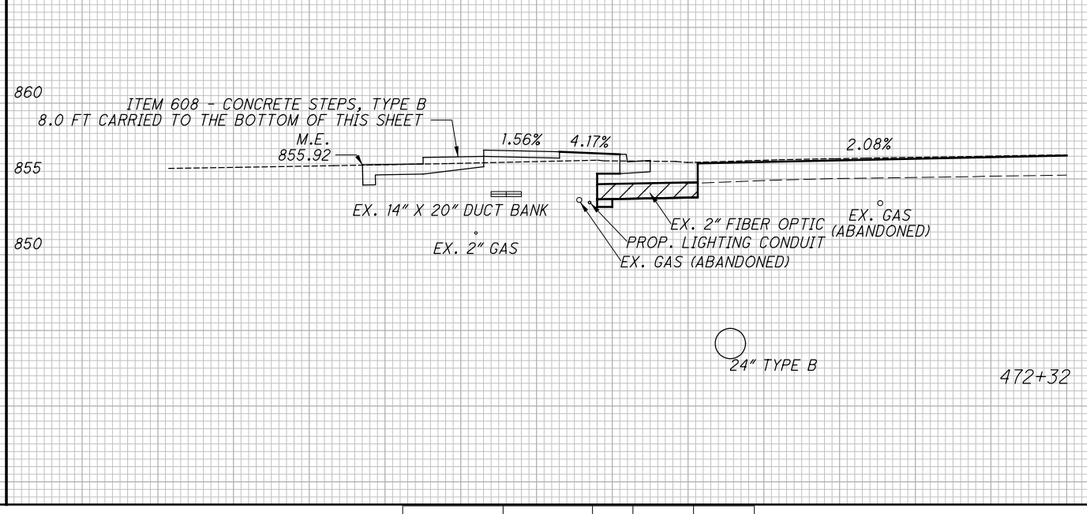

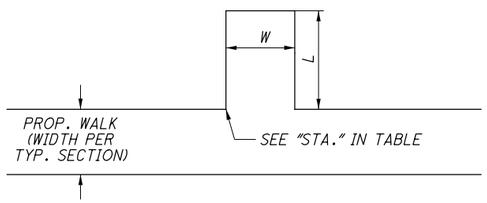

REFERENCE NUMBER	STA.	SIDE	LENGTH (FT)	WIDTH (FT)
SW1	451+45.49	LT	13.6	15
SW2	455+79	LT	SEE DRIVEWAY DETAILS	
* SW3	467+11.40	LT	3	2.8
SW4	469+50.82	LT	2.6	2.6
SW5	470+51.81	LT	5.6	2.6
SW6	471+01.51	LT	5.6	2.7
* SW7	472+30.30	LT	8	3.8
SW8	473+06.74	LT	2	3.8
* SW9	474+28.83	LT	2.8	3.8
* SW10	478+56.24	LT	18.7	3.8

* SEE CROSS SECTIONS ON THIS SHEET

QUANTITIES FOR SIDEWALK WORK HAVE BEEN INCLUDED IN THE PAVEMENT SUBSUMMARY UNDER ITEM 608 - 4" CONCRETE WALK. SEE SHEET 37.

THE FOLLOWING QUANTITIES HAVE BEEN CARRIED TO THE GENERAL SUMMARY:

ITEM 608 - CONCRETE STEPS, TYPE B 11 FT

CALCULATED	ATW
CHECKED	JCH

SIDEWALK DETAILS

MIA-41-10.32

\\strand.com\projects\CIN\4300--4399\4354\004\Drawings\CAD\110253\roadway\sheets\110253GM002.dgn Sheet 10/1/2021 4:38:56 PM Allisonw

SHEET NO.	REFERENCE NO.	STATION FROM	STATION TO	SIDE	611 12" CONDUIT, TYPE B FT	611 15" CONDUIT, TYPE B FT	611 18" CONDUIT, TYPE B FT	611 24" CONDUIT, TYPE B FT	611 30" CONDUIT, TYPE B FT	611 36" CONDUIT, TYPE B FT	611 42" CONDUIT, TYPE B FT	611 CATCH BASIN, NO. 2-2B EACH	611 CATCH BASIN, NO. 3 EACH	611 CATCH BASIN, NO. 6 EACH	611 MANHOLE, NO. 3 EACH	SPECIAL TRENCH DRAIN FT				
39	D101	444+14.61		LT									1							
39	D102	444+22.13		LT											1					
39	D103	443+28.35		RT											1					
39	D104	443+50.41		RT									1							
39	D105	443+50.35		RT											1					
39	D106	443+84.88		RT									1							
39	D107	444+16.82		RT									1							
39	D108	444+40.83		RT											1					
39	D109	444+35.21		RT											1					
39	D110	443+50.08		RT								1								
40	D201	445+64.89		RT											1					
40	D202	447+04.20		RT											1					
40	D203	447+4.20		RT									1							
40	D204A	446+59.46		LT									1							
40	D204	448+56.24		LT									1							
40	D205	447+25.11		RT											1					
40	D206	447+77.17		RT											1					
40	D207	447+30.01		RT										1						
40	D208	447+70.58		RT									1							
40	D211	449+76.50		RT									1							
41	D209	450+58.13		RT											1					
41	D210	450+54.32		LT									1							
41	D301	452+13.34		RT									1							
41	D301A	451+37.79		RT									1							
41	D302	452+23.21		RT											1					
41	D303	452+23.21		LT									1							
41	D304	452+50.89		RT									1							
41	D305	453+07.36		RT									1							
41	D306	453+06.86		RT											1					
41	D307	454+83.23		RT									1							
41	D308	454+83.11		RT											1					
41	D309	454+82.31		LT									1							
42	D401	455+95.92		RT											1					
42	D402	456+27.37		RT											1					
42	D403	457+26.85		RT											1					
42	D403A	457+27.26		RT											1					
42	D404	457+81.87		RT											1					
42	D405	457+82.13		RT									1							
42	D406	457+82.40		LT									1							
42	D406A	457+82.40		LT									1							
42	D407	459+67.17		RT									1							
42	D408	459+67.00		RT											1					
42	D409	459+66.31		LT									1							
43	D501	460+23.99		RT											1					
43	D502	461+20.11		RT									1							
43	D502A	461+64.81		RT									1							
43	D503	461+41.60		LT									1							
43	D504	463+00.75		LT									1							
43	D505	462+90.94		RT									1							
43	D506	463+05.70		RT									1							
43	D507	463+44.41		RT									1							
43	D508	464+69.50		RT									1							
44	D601	465+98.04		RT									1							
44	D602	466+00.99		LT									1							
44	D602A	468+39.00		LT									1							
44	D604	468+32.01		RT									1							
44	D605	466+84.54		RT											1					
44	D606	467+33.15		RT									1							
	D701	NOT USED																		
44	D702	469+85.53		RT									1							
TOTALS CARRIED TO GENERAL SUMMARY					0	0	0	0	0	0	0	1	36	1	21	0				

CALCULATED PER
CHECKED JCH

DRAINAGE SUBSUMMARY

MIA-41-10.32

\\strand.com\projects\CIN\4300--4399\4354\004\Drawings\CAD\110253\roadway\sheets\Summaries\110253DS001.dgn Sheet 10/1/2021 4:38:57 PM Allisonw

SHEET NO.	REFERENCE NO.	STATION FROM	STATION TO	SIDE	611 12" CONDUIT, TYPE B FT	611 15" CONDUIT, TYPE B FT	611 18" CONDUIT, TYPE B FT	611 24" CONDUIT, TYPE B FT	611 30" CONDUIT, TYPE B FT	611 36" CONDUIT, TYPE B FT	611 42" CONDUIT, TYPE B FT	611 CATCH BASIN, NO. 2-2B EACH	611 CATCH BASIN, NO. 3 EACH	611 CATCH BASIN, NO. 6 EACH	611 MANHOLE, NO. 3 EACH	SPECIAL TRENCH DRAIN FT				
45	D603	470+17.67		LT									1							
45	D703	471+57.50		LT											1					
45	D704	471+54.28		RT									1							
45	D705	473+36.01		LT									1							
45	D706	473+36.11		LT											1					
45	D707A	472+55.88		RT									1							
45	D708	473+87.45		LT											1					
45	D709	473+81.70		RT									1							
45	D710	470+81.33		RT									1							
45	D810	474+69.53		LT											1					
45	D811	474+69.38		RT									1							
46	D801	477+18.88		LT									1							
46	D802	477+18.89		LT											1					
46	D803A	475+77.23		RT									1							
46	D803B	476+47.04		RT									1							
46	D803	477+07.28		RT									1							
46	D804	478+90.69		LT									1							
46	D805	478+90.82		LT											1					
46	D806	478+95.53		RT									1							
46	D807	479+46.58		LT											1					
46	D809	479+64.77		RT									1							
46	D812	479+42.86		LT									1							
46	D813	479+09.18		LT									1							
47	D901	480+05.35		LT											1					
47	D902	480+65.09		LT											1					
47	D903A	480+27.04		RT									1							
47	D903	480+64.85		RT									1							
43	D904	480+53.17		RT													24			
39	D101 to D102	444+14.61	444+22.13	LT	17															
39	D103 to D105	443+28.35	443+50.35	RT				22												
39	D104 to D105	443+50.41	443+50.35	RT		7														
39	D110 to D105	443+50.08	443+50.35	RT			12													
39	D105 to D109	443+50.35	444+35.21	RT						85										
39	D106 to D107	443+84.88	444+16.82	RT	31															
39	D107 to D108	444+16.82	444+40.83	RT	27															
39	D108 to D109	444+40.83	444+35.21	RT	29															
39	D109 to D201	444+35.21	445+64.89	RT						109										
40	D201 to D202	445+64.89	447+04.20	RT						140										
40	D203 to D202	447+4.16	447+04.20	RT	9															
40	D202 to D205	447+04.20	447+25.11	RT						21										
40	D205 to D206	447+25.11	447+77.17	RT						52										
40	D207 to D208	447+30.01	447+70.58	RT	41															
40	D208 to D206	447+70.58	447+77.17	RT	24															
40	D204A to D204	446+59.46	448+56.24	LT	196															
40	D206 to D209	447+77.17	450+58.13	RT						281										
41	D204 to D210	448+56.24	450+54.32	LT	198															
41	D210 to D209	450+54.32	450+58.13	CROSSING		55														
41	D209 to D302	450+58.13	452+12.92	RT							165									
41	D303 to D302	452+23.21	452+23.21	RT	54															
41	D211 to D301A	449+76.50	451+37.79	RT	161															
41	D301A to D301	451+37.79	452+13.34	RT	76															
41	D301 to D302	452+13.34	452+23.21	RT		22														
41	D302 to D306	452+23.21	453+06.86	RT							84									
41	D304 to D305	452+50.89	453+07.36	RT	66															
41	D305 to D306	453+07.36	453+06.86	RT		44														
41	D306 to D308	453+06.86	454+83.11	RT							176									
41	D307 to D308	454+83.23	454+83.11	RT	7															
41	D309 to D308	454+82.31	454+83.11	LT	51															
41	D308 to D401	454+83.11	455+95.92	RT							113									
TOTALS CARRIED TO GENERAL SUMMARY					987	128	12	22	0	688	538	0	12	0	5	24				

CALCULATED PER
CHECKED JCH

DRAINAGE SUBSUMMARY

MIA-41-10.32

\\strand.com\projects\CIN\4300--4399\4354\004\Drawings\CAD\110253\roadway\sheets\Summaries\110253DS002.dgn Sheet 10/1/2021 4:38:57 PM Allisonw

SHEET NO.	REFERENCE NO.	STATION FROM	STATION TO	SIDE	611 12" CONDUIT, TYPE B FT	611 15" CONDUIT, TYPE B FT	611 18" CONDUIT, TYPE B FT	611 24" CONDUIT, TYPE B FT	611 30" CONDUIT, TYPE B FT	611 36" CONDUIT, TYPE B FT	611 42" CONDUIT, TYPE B FT	611 CATCH BASIN, NO. 2-2B EACH	611 CATCH BASIN, NO. 3 EACH	611 CATCH BASIN, NO. 6 EACH	611 MANHOLE, NO. 3 EACH	SPECIAL TRENCH DRAIN FT				
42	D401 to D402	455+95.92	456+27.37	RT							31									
42	D402 to D403	456+27.37	457+26.85	RT							100									
42	D403A to D403	457+82.40	457+26.85	RT	23															
42	D403 to D404	457+26.85	457+81.87	RT							55									
42	D405 to D404	457+82.13	457+81.87	RT	8															
42	D406A to D406	457+82.40	457.82.40	LT	20															
42	D406 to D404	457+82.40	457+81.87	LT	50															
42	D404 to D408	457+81.87	459+67.00	RT							185									
42	D407 to D408	459+67.17	459+67.00	RT	8															
42	D409 to D408	459+66.31	459+67.00	CROSSING	50															
42	D408 to D501	459+67.00	460+23.99	RT							59									
43	D502A to D502	461+64.81	461+20.11	RT	45															
43	D502 to D503	461+20.11	461+41.60	CROSSING	62															
43	D503 to D504	461+41.60	463+00.75	LT		159														
43	D507 to D506	463+44.41	463+05.70	RT	39															
43	D506 to D505	463+05.70	462+90.94	RT	22															
43	D505 to D504	462+90.94	463+00.75	CROSSING			58													
43	D504 to D602	463+00.75	466+00.99	LT			301													
43	D508 to D601	464+69.50	464+98.04	RT	129															
44	D601 to D602	465+98.04	466+00.99	CROSSING		57														
44	D602 to D602A	466+00.99	468+39.00	LT			238													
44	D605 to D606	466+84.54	467+33.15	RT	49															
44	D606 to D604	467+33.15	468+32.01	RT	99															
44	D604 to D702	468+32.01	469+85.53	RT	154															
44	D602A to D603	468+39.00	470+17.67	LT			179													
44	D702 to D710	469+85.53	470+81.33	RT			96													
45	D603 to D703	470+17.67	471+57.50	LT			139													
45	D703 to D706	471+57.51	473+36.11	LT				124												
45	D705 to D706	473+36.01	473+36.11	LT	6															
45	D706 to D708	473+36.11	473+87.45	LT					51											
45	D708 to D810	473+87.45	474+69.53	LT					82											
45	D710 to D704	470+81.33	471+54.28	RT			73													
45	D704 to D703	471+54.28	471+57.50	CROSSING			52													
45	D707A to D709	472+55.85	473+81.70	RT	126															
45	D709 to D811	473+81.70	474+69.38	RT	88															
45	D811 to D810	474+69.38	474+69.38	CROSSING			56													
45	D810 to D802	474+69.53	477+18.89	LT					249											
46	D803A to D803B	475+77.23	476+47.04	RT	70															
46	D803B to D803	476+47.04	477+07.28	RT	60															
46	D803 to D802	477+07.28	477+18.89	CROSSING		51														
46	D801 to D802	477+18.88	477+18.89	LT	8															
46	D802 to D805	477+18.89	478+90.82	LT						172										
46	D804 to D805	478+90.69	478+90.82	LT	8															
46	D805 to D807	478+90.82	479+46.58	LT						56										
46	D813 to D812	479+09.18	479+42.86	LT	33															
46	D812 to D807	479+42.86	479+46.58	LT	25															
46	D806 to D809	478+95.53	479+64.77	RT		69														
46	D807 to D901	479+46.58	480+05.35	LT						59										
46	D809 to D903A	479+64.77	480.27.04	RT		62														
47	D903A to D903	480+27.04	480+64.85	RT		38														
47	D903 to D902	480+64.85	480+65.09	CROSSING			35													
47	D901 to D902	480+05.35	480+65.09	LT						61										
47	D902 to D904	480+65.09	480+53.11	CROSSING	25															
TOTALS CARRIED TO GENERAL SUMMARY					1207	436	1227	124	382	348	399	0	0	0	0	0				

CALCULATED PER
CHECKED JCH

DRAINAGE SUBSUMMARY

MIA-41-10.32

\\strand.com\projects\CIN\4300-4399\4354\004\Drawings\CAD\110253\roadway\sheets\Summaries\110253DS003.dgn Sheet 10/1/2021 4:38:58 PM Allisonw

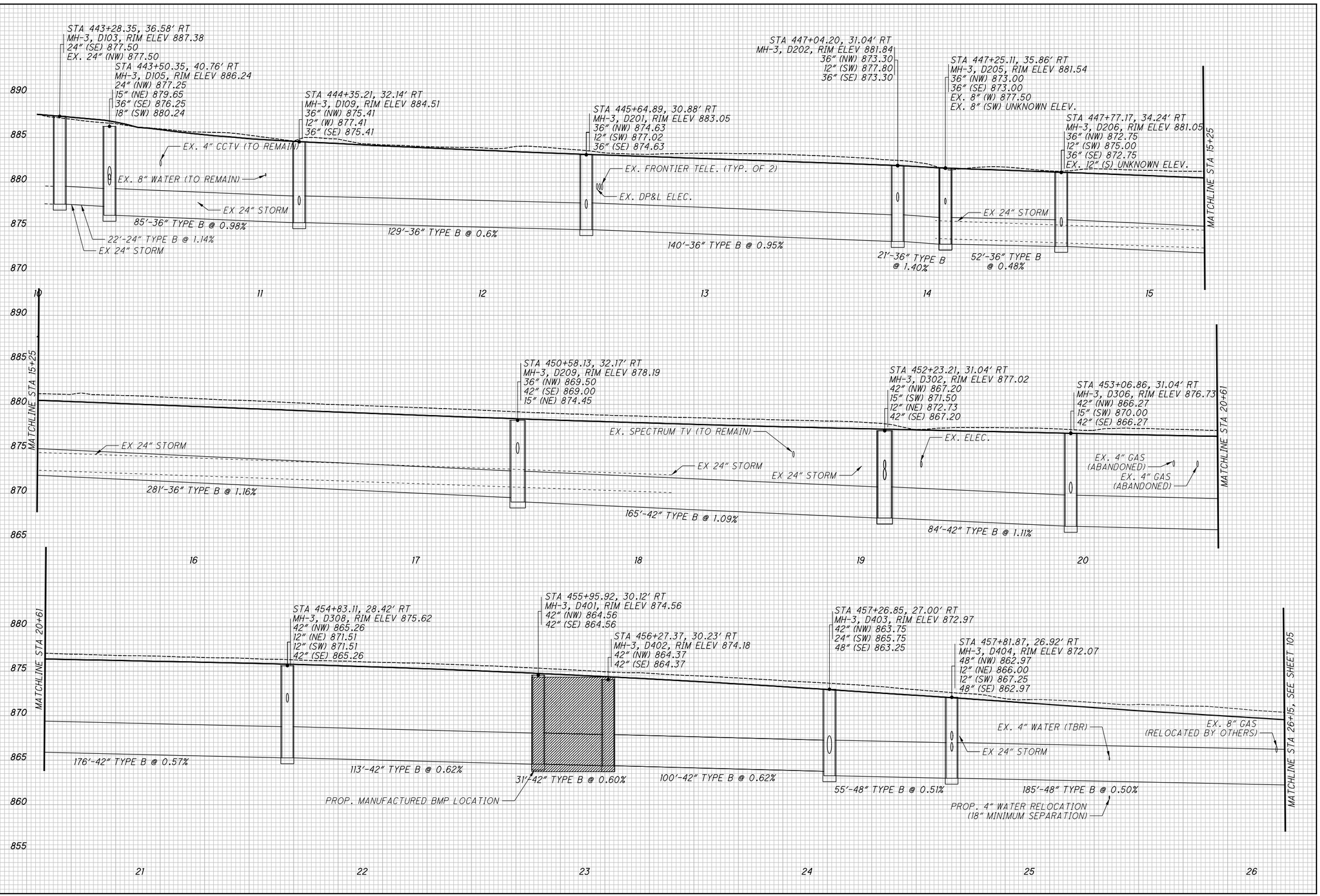

CALCULATED MDO
CHECKED AWA

STORM SEWER PROFILES

MIA-41-10.32

104
194

S:\CIN\4300-4399\4354\004\Drawings\CAD\11025\drainage\sheets\Storm profiles\10253DF001.dgn Sheet 10/1/2021 4:38:59 PM Allisonw

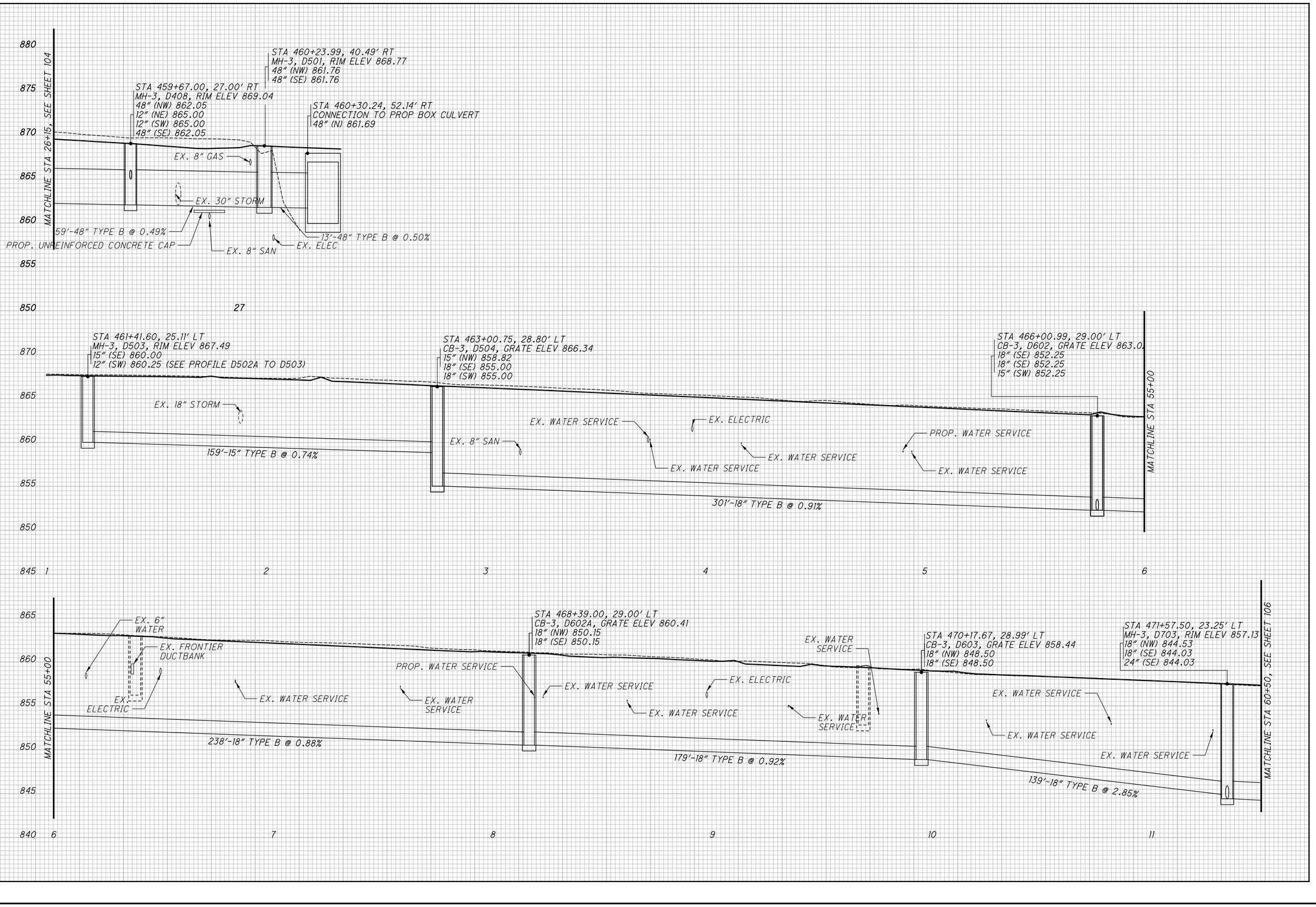

S:\CIN\4300--4399\4354\004\Drawings\CAD\11053\drainage\sheets\Storm profiles\10253DF002.dgn Sheet 10/1/2021 4:38:59 PM Allisonw

CALCULATED MDO
CHECKED AWA

STORM SEWER PROFILES

MIA-41-10.32

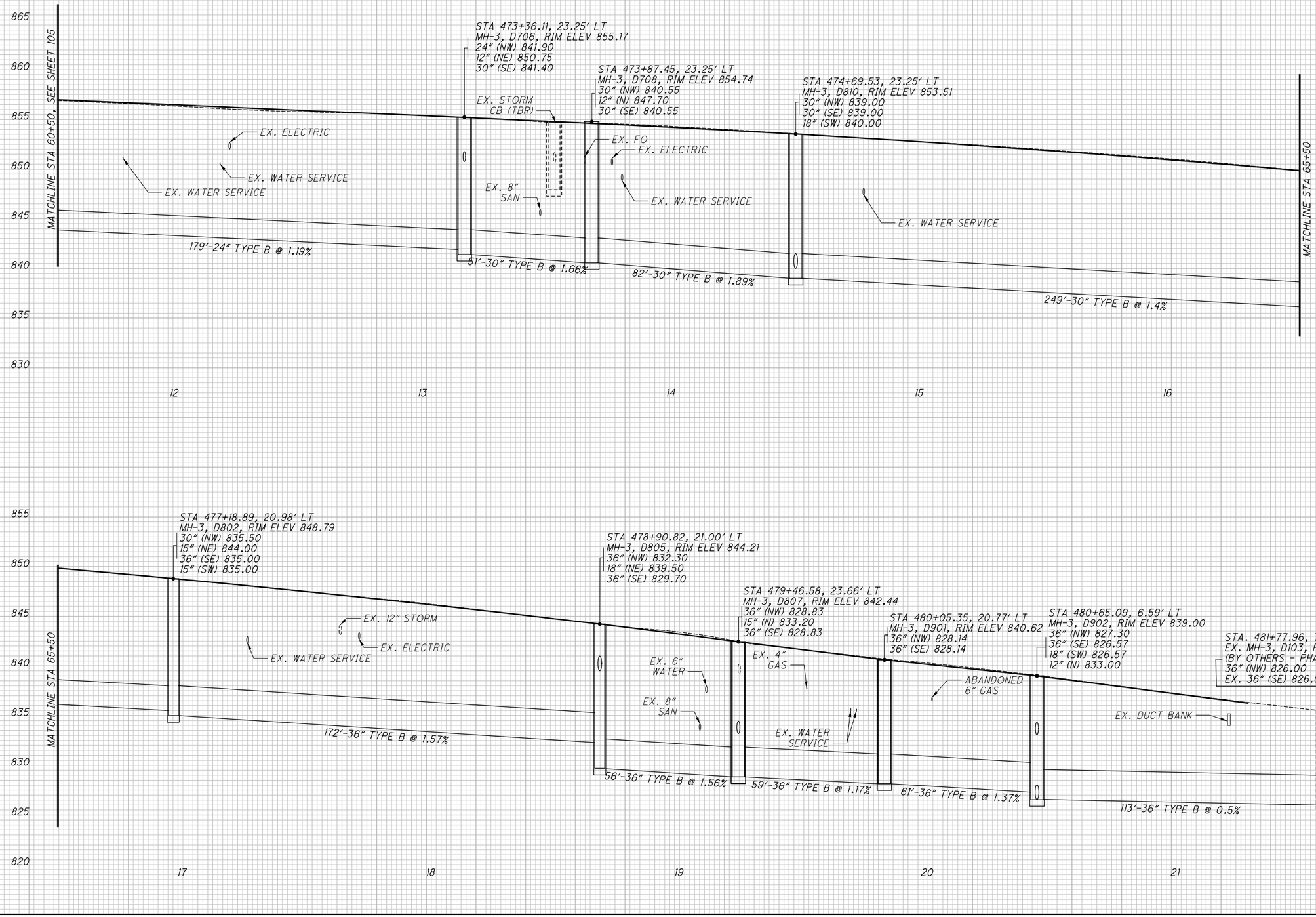

CALCULATED MDO
CHECKED AWA

STORM SEWER PROFILES

MIA-41-10.32

S:\CIN\4300-4399\4354\004\Drawings\CAD\110253\drainage\sheets\Storm profiles\102530F003.dgn Sheet 10/1/2021 4:39:00 PM Allisonw

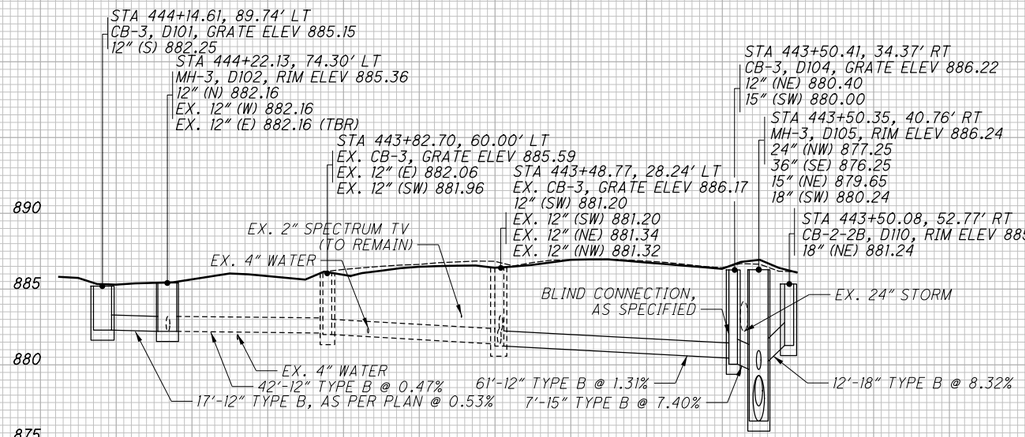

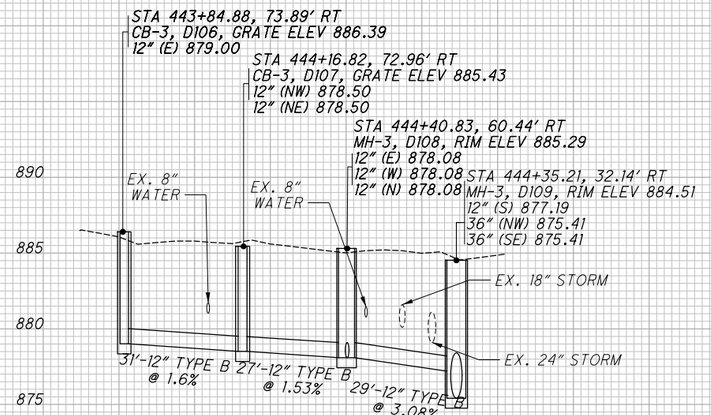

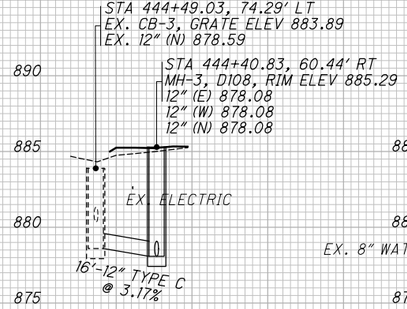

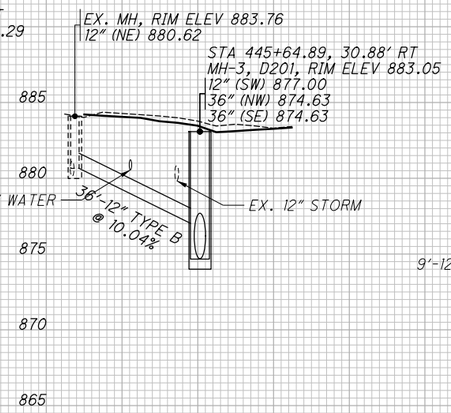

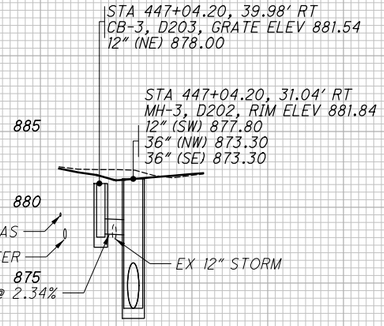

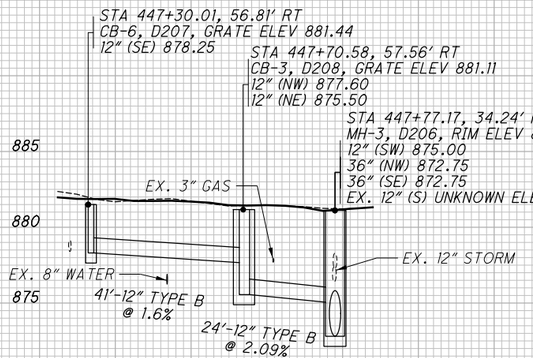

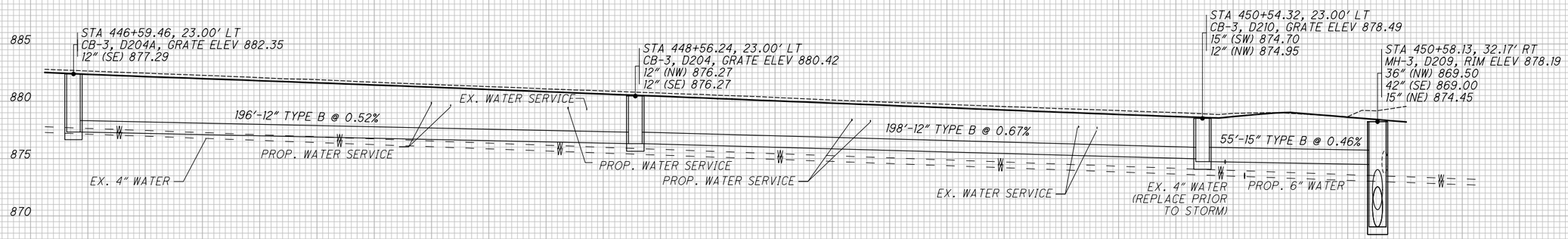

CALCULATED MDO
CHECKED AWA

STORM SEWER PROFILES

MIA-41-10.32

107
194

S:\CIN\4300--4399\4354\004\Drawings\CAD\110253\drainage\sheets\Storm profiles\10253DF004.dgn Sheet 10/1/2021 4:39:00 PM Allisonw

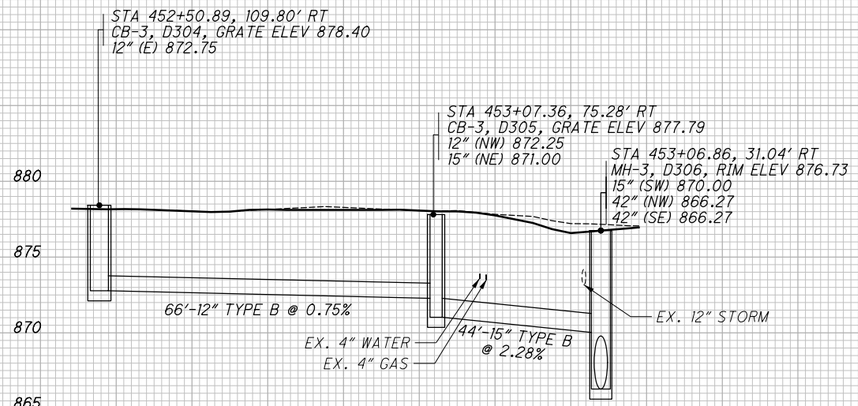

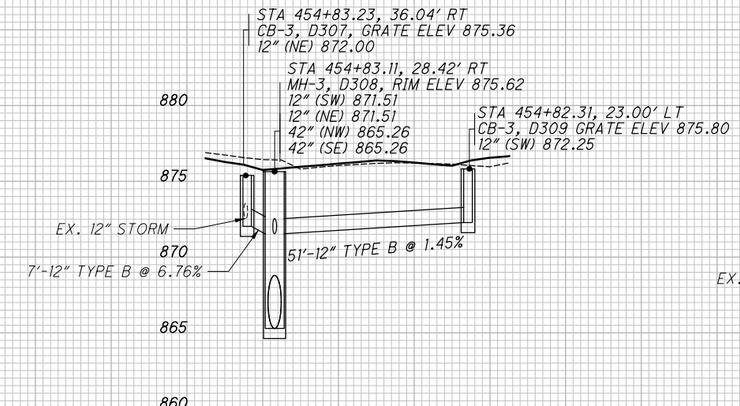

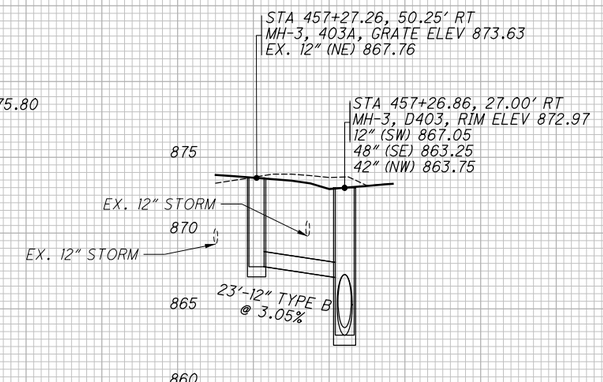

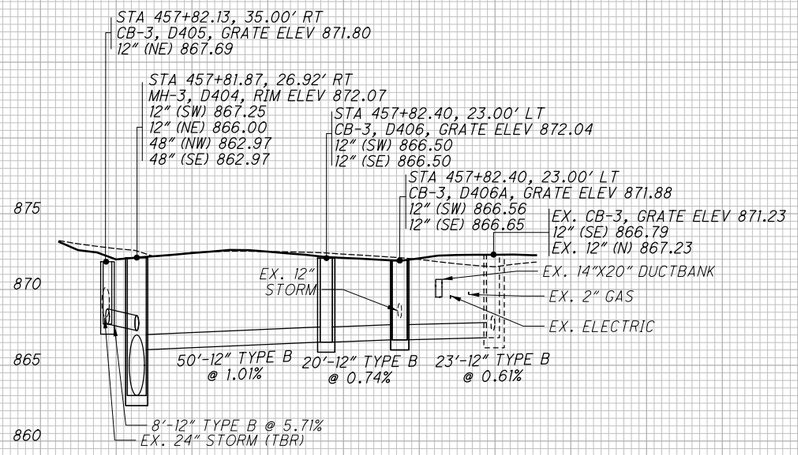

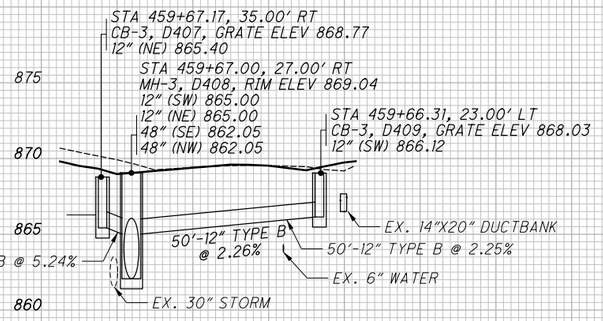

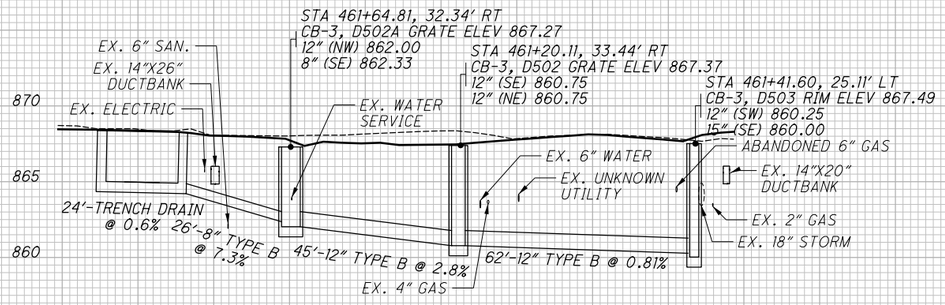

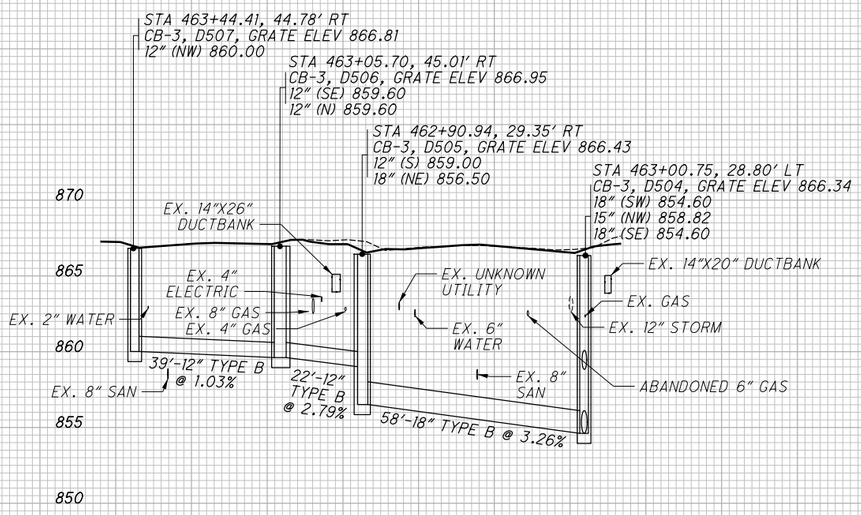

STORM SEWER PROFILES

CALCULATED MDO
CHECKED AWA

STORM

MIA-41-10.32

S:\CIN\4300--4399\4354\004\Drawings\CAD\110253\drainage\sheets\Storm profiles\10253DF005.dgn Sheet 10/1/2021 4:39:01 PM Allisonw

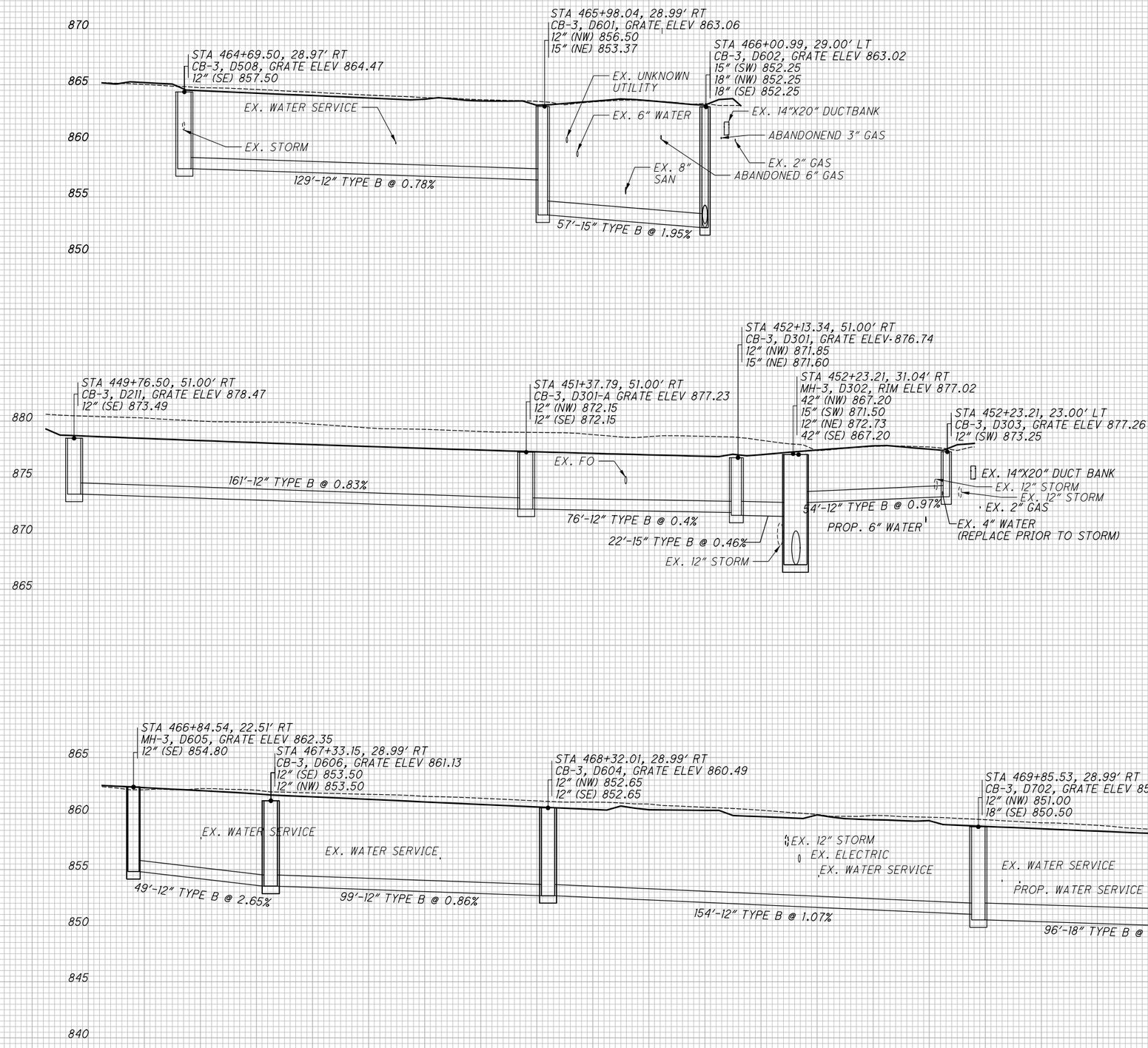

CALCULATED MDO
CHECKED AWA

STORM SEWER PROFILES

MIA-41-10.32

S:\CIN\4300--4399\4354\004\Drawings\CAD\110253\drainage\sheets\Storm profiles\10253DF006.dgn Sheet 10/1/2021 4:39:01 PM Allisonw

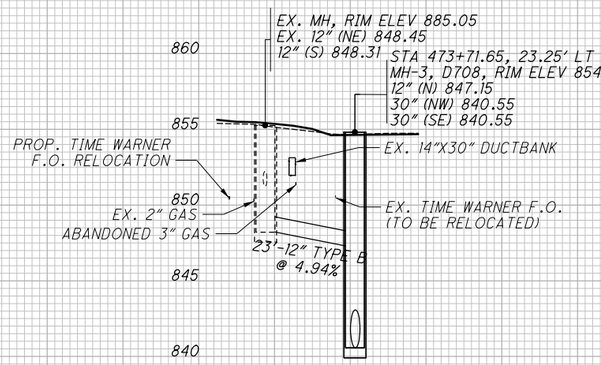

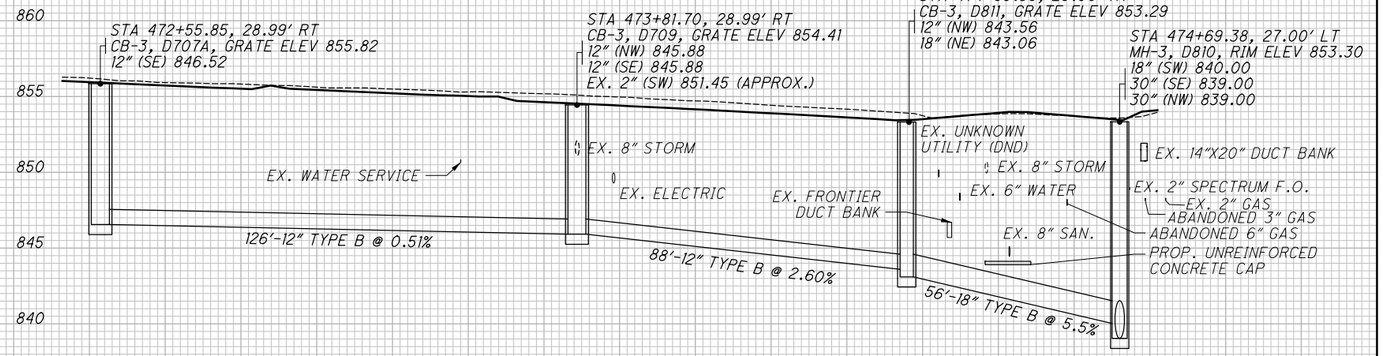

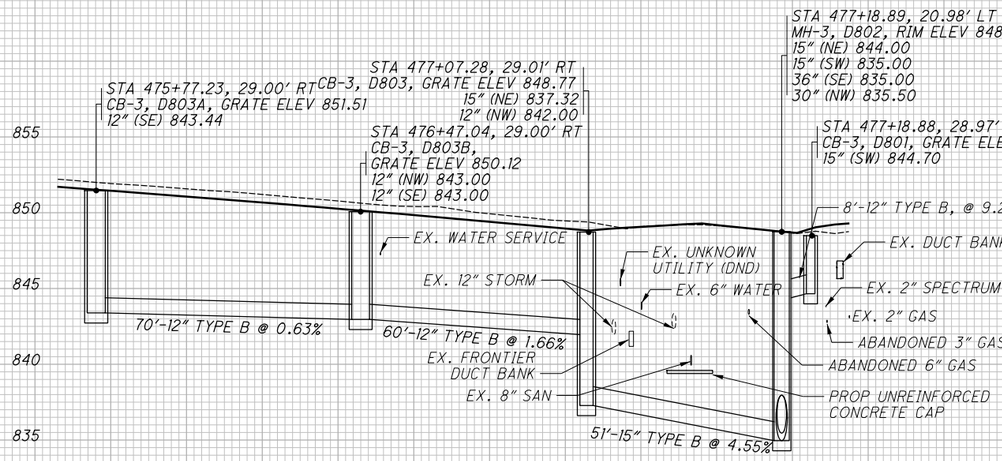

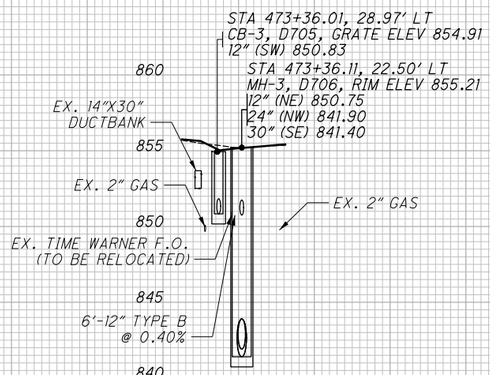

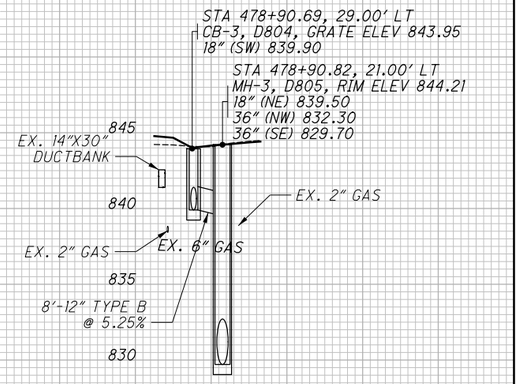

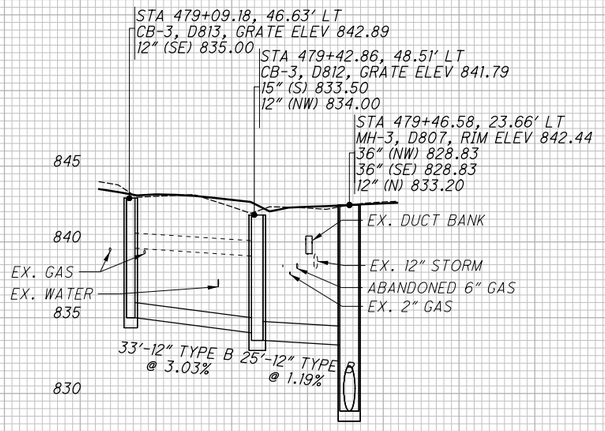

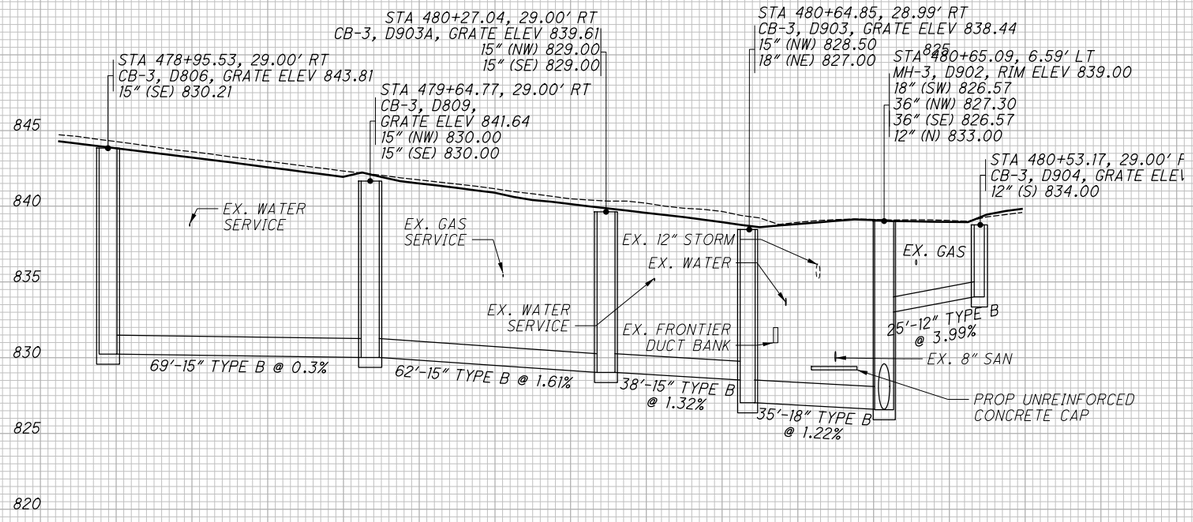

CALCULATED MDO
CHECKED AWA

STORM SEWER PROFILES

MIA-41-10.32

S:\CIN\4300--4399\4354\004\Drawings\CAD\110253\drainage\sheets\Storm profiles\10253DF007.dgn Sheet 10/1/2021 4:39:02 PM Allisonw

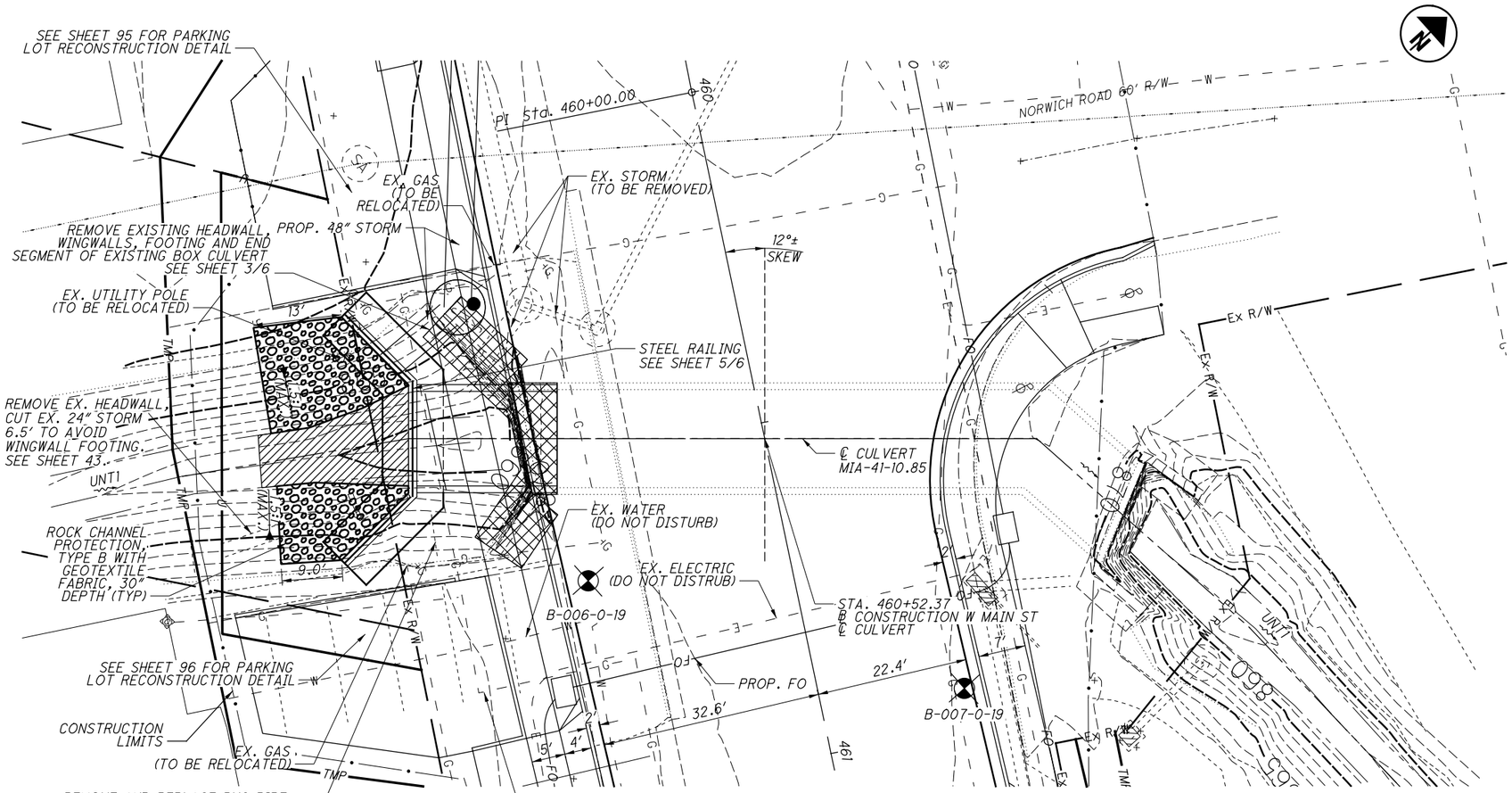

PLAN

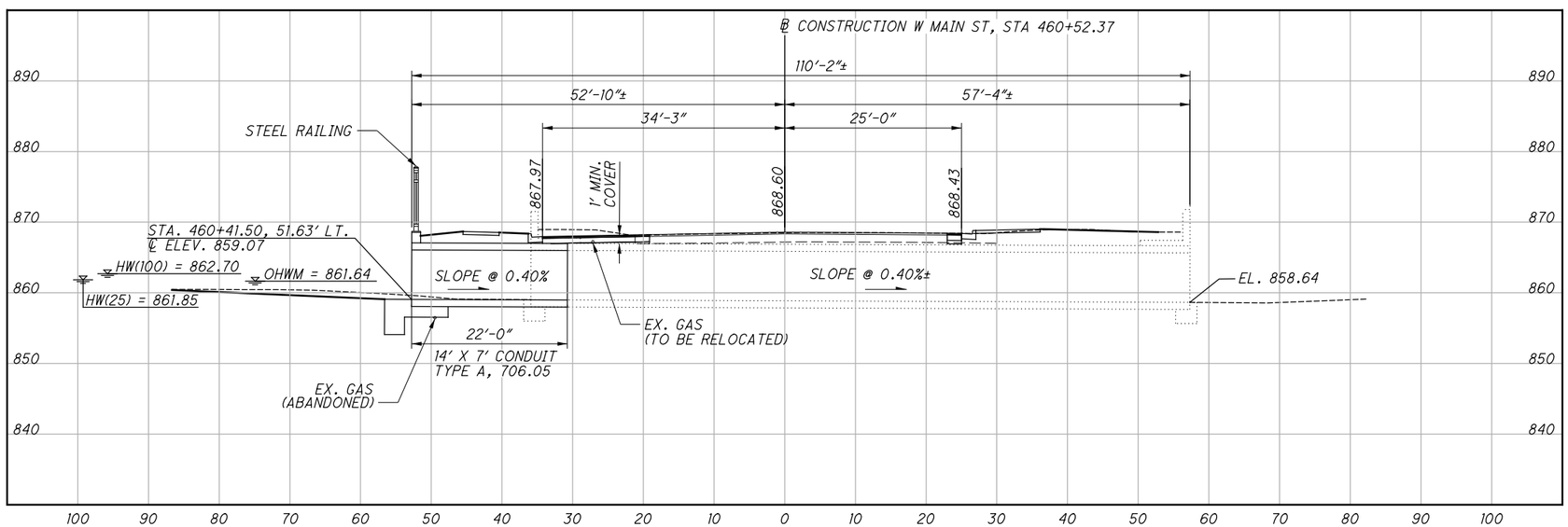

PROFILE ALONG CENTERLINE OF CULVERT

BENCHMARK DATA

BM #1 STA. 466+80.79, ELEV. 863.11 OFFSET 35.52' RT.
BM #2 STA. 449+91.41 ELEV. 881.02 , OFFSET 65.42' RT.

FOR ADDITIONAL BENCHMARK INFORMATION. SEE ROADWAY PLAN SHEET 2/195

NOTES

EARTHWORK LIMITS SHOWN ARE APPROXIMATE. ACTUAL SLOPES SHALL CONFORM TO PLAN CROSS SECTIONS.

LEGEND

- EXCAVATION
- ITEM 601 - ROCK CHANNEL PROTECTION, TYPE B WITH GEOTEXTILE FABRIC, 30"
- REMOVAL
- BORING LOCATION

DESIGN TRAFFIC:

2023 ADT = 21,350 2023 ADTT = 430
2043 ADT = 24,430 2043 ADTT = 500

HYDRAULIC DATA

DRAINAGE AREA = 0.46 SQ. MILES
Q (25) = 197 CFS V (25) = 7.68 FT/S HW (25) = 861.85 FT
Q (100) = 293 CFS V (100) = 8.77 FT/S HW (100) = 862.70 FT

EXISTING STRUCTURE

TYPE: 14' x 7' PRECAST REINFORCED CONCRETE BOX CULVERT
SKEW: 12°± LF
ALIGNMENT: TANGENT
STRUCTURAL FILE NUMBER: 5500737
DATE BUILT: 2004
DISPOSITION: TO BE EXTENDED

PROPOSED STRUCTURE

TYPE: 14' x 7' PRECAST REINFORCED CONCRETE BOX CULVERT (EXTENSION)
SKEW: 12°± LF
ALIGNMENT: TANGENT
STRUCTURAL FILE NUMBER: 5500737

DESIGN AGENCY
STRAND ASSOCIATES INC.
615 ELSINORE PLACE, STE. 320
CINCINNATI, OHIO 45202

DESIGNED	DRAWN	REVIEWED	DATE
JAS	JAS	JDH	
CHECKED	REVISED	STRUCTURE FILE NUMBER	
ADW		5500737	

MIAMI COUNTY
STA. 460+19.03
STA. 460+61.39

SITE PLAN
BRIDGE NO. MIA-41-1085
OVER UNNAMED DITCH

MIA-41-10.32
PID No. 110253

1 / 6

111
194

S:\CIN\4300--4399\4354\004\Drawings\CAD\110253\drainage\sheets\10253DC001.dgn 10/1/2021 4:39:04 PM Allisonw

DESIGN SPECIFICATIONS:
THIS STRUCTURE CONFORMS TO "STANDARD SPECIFICATIONS FOR HIGHWAY BRIDGES" ADOPTED BY THE AMERICAN ASSOCIATION OF STATE HIGHWAY AND TRANSPORTATION OFFICIALS, 2002 AND THE ODOT BRIDGE DESIGN MANUAL.

REFERENCES:
REFER TO THE FOLLOWING SUPPLEMENTAL SPECIFICATION:
SS940 DATED 04-17-15

DESIGN LOADING: (PRECAST REINFORCED CONCRETE BOX CULVERT)
HL-93
FUTURE WEARING SURFACE (FWS) OF 0.060 KIPS/FT

DESIGN DATA: THE FOLLOWING DESIGN DATA IS ASSUMED:
INTEGRAL ANGLE OF FRICTION OF BACKFILL SOIL, ϕef = 30°
COEFFICIENT OF FRICTION, μ = 0.35
TOTAL UNIT WEIGHT OF BACKFILL SOIL = 120 PCF
UNIT WEIGHT OF CONCRETE = 150 PCF
HEIGHT OF LIVE LOAD SURCHARGE = 2FT

CONCRETE CLASS QC1 - COMPRESSIVE STRENGTH 4000 PSF
(FOOTING, WINGWALL AND FORESLOPE WALL)

REINFORCING STEEL - ASTM A615, A616 OR 617
GRADE 60 MINIMUM YIELD STRENGTH
60,000 PSI (ALL REINFORCING SHALL BE EPOXY COATED)

FORESLOPE WALL ANCHOR DOWELS:
ANCHOR PER CMS 510 WITH NONSHRINK, NONMETALLIC GROUT CONFORMING TO CMS 705.20 AND TO A DEPTH SPECIFIED ON SHEET 4/6. PAYMENT FOR DOWEL HOLES, GROUT AND INSTALLATION SHALL BE INCLUDED WITH ITEM 511.

AS AN ALTERNATIVE TO RESIN BONDING, THREADED INSERTS OR NONPROTRUDING MECHANICAL CONNECTORS CAST INTO THE CULVERT BY THE MANUFACTURER MAY BE USED PROVIDED THEY CAN RESIST AN ULTIMATE PULL-OUT STRENGTH OF 12 KIPS AND MAINTAIN A MINIMUM COVER OF 3 INCHES AT THE BOTTOM OF THE CULVERT SLAB. MECHANICAL CONNECTORS MUST PROVIDE AN "L-SHAPED" BAR INSIDE THE CULVERT WITH A MINIMUM HORIZONTAL LENGTH OF 12 INCHES. PAYMENT FOR INSERTS OR MECHANICAL CONNECTORS SHALL BE INCLUDED WITH ITEM 611.

BACKFILL LIMITATION:
WHEN THE DESIGN HEIGHT IS GREATER THAN 10 FT, THE BACKFILL BEHIND THE WINGWALLS SHALL NOT BE PLACED HIGHER THAN THE ELEVATION OF THE SOIL ABOVE THE TOE. WHEN THE SOIL ABOVE THE TOE IS AT ITS FINISHED ELEVATION, THE REMAINDER OF THE BACKFILL MAY BE PLACED.

EXISTING STRUCTURE VERIFICATION:
DETAILS AND DIMENSIONS SHOWN ON THESE PLANS PERTAINING TO THE EXISTING STRUCTURES HAVE BEEN OBTAINED FROM PLANS OF THE EXISTING STRUCTURES AND FROM FIELD OBSERVATIONS AND MEASUREMENTS. CONSEQUENTLY, THEY ARE INDICATIVE OF THE EXISTING STRUCTURES AND THE PROPOSED WORK BUT THEY SHALL BE CONSIDERED TENTATIVE AND APPROXIMATE. THE CONTRACTOR IS REFERRED TO C&MS SECTIONS 102.05 AND 105.02. BASE CONTRACT BID PRICES UPON A RECOGNITION OF THE UNCERTAINTIES DESCRIBED ABOVE AND UPON A PREBID EXAMINATION OF THE EXISTING STRUCTURE. HOWEVER, THE DEPARTMENT WILL PAY FOR ALL PROJECT WORK BASED UPON ACTUAL DETAILS AND DIMENSIONS THAT HAVE BEEN VERIFIED IN THE FIELD.

POROUS BACKFILL WITH GEOTEXTILE FABRIC: 1'-6" THICK SHALL BE PLACED BEHIND THE WINGWALLS ONLY AND SHALL EXTEND TO 12" BELOW THE EMBANKMENT SURFACE. GEOTEXTILE FABRIC SHALL BE PLACED BETWEEN THE POROUS BACKFILL AND REPLACED EXCAVATION ADJACENT TO THE STRUCTURE. IT SHALL TURN UNDER THE BOTTOM OF THE POROUS BACKFILL AND RETURN 6" ABOVE THE TOP ELEVATION OF THE WEEPHOLE. WEEPHOLES SHALL BE PLACED 6" TO 12" ABOVE THE NORMAL WATER ELEVATION OR GROUND LINE AND SHALL HAVE A MAXIMUM SPACING OF 10'-0". A MINIMUM OF ONE WEEPHOLE SHALL BE PROVIDED PER WINGWALL.

PREFORMED EXPANSION JOINT FILLER: PREFORMED EXPANSION JOINT FILLER (PEJF) CONFORMING TO CMS 705.03, 1 INCH THICK, SHALL BE PLACED ABOVE THE FOOTING BETWEEN THE SIDES OF THE BOX CULVERT AND THE ENDS OF THE WINGWALLS. PAYMENT FOR MATERIALS AND INSTALLATION SHALL BE INCLUDED WITH ITEM 516 - 1" PREFORMED EXPANSION JOINT FILLER.

SEALING OF FORESLOPE WALL AND WINGWALLS: ALL EXPOSED FORESLOPE WALL AND WINGWALL CONCRETE SHALL BE SEALED WITH EPOXY-URETHANE SEALER. THE LIMITS SHALL BE AS SHOWN IN THE DIAGRAMS BELOW. PAYMENT FOR THE EPOXY-URETHANE SEALER SHALL BE PER ITEM 512 - SEALING OF CONCRETE SURFACES (EPOXY-URETHANE).

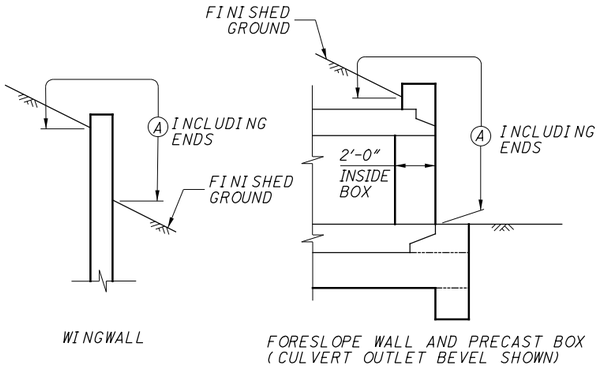

WINGWALL

FORESLOPE WALL AND PRECAST BOX (CULVERT OUTLET BEVEL SHOWN)

LIMITS OF ITEM 512-SEALING CONCRETE SURFACES

(A) - SEAL ENTIRE CONCRETE SURFACE AREA

ITEM 202, PORTIONS OF STRUCTURE REMOVED, AS PER PLAN:
THIS ITEM SHALL INCLUDE THE ELEMENTS INDICATED IN THE PLANS AND GENERAL NOTES AND THAT ARE NOT SEPARATELY LISTED FOR PAYMENT, EXCEPT FOR WEARING COURSE REMOVAL. ITEMS TO BE REMOVED INCLUDE ALL EXISTING MATERIALS BEING REPLACED BY NEW CONSTRUCTION AND MISCELLANEOUS ITEMS THAT ARE NOT SHOWN TO BE INCORPORATED INTO THE FINAL CONSTRUCTION AND ARE DIRECTED TO BE REMOVED BY THE ENGINEER. THE USE OF EXPLOSIVES, HEADACHE BALLS AND/OR HOE-RAMS WILL NOT BE PERMITTED. THE METHOD OF REMOVAL AND THE WEIGHT OF HAMMER SHALL BE APPROVED BY THE ENGINEER. PERFORM ALL WORK IN A MANNER THAT WILL NOT CUT, ELONGATE OR DAMAGE THE EXISTING REINFORCING STEEL TO BE PRESERVED. CHIPPING HAMMERS SHALL NOT BE HEAVIER THAN THE NOMINAL 90-POUND CLASS. PNEUMATIC HAMMERS SHALL NOT BE PLACED IN DIRECT CONTACT WITH REINFORCING STEEL THAT IS TO BE RETAINED IN THE REBUILT STRUCTURE. SUBMIT CONSTRUCTION PLANS ACCORDING TO C&MS 501.05.

THIS WORK CONSISTS OF REMOVAL OF THE EXISTING BOX CULVERT INLET WINGWALLS, FOOTINGS, STEEL RAILING, CONCRETE RAILING AND MOMENT SLAB, AND SKEWED PRECAST CONCRETE BOX CULVERT END SECTION AS SHOWN IN THE PLANS AND AS NECESSARY TO ACCOMMODATE NEW CONSTRUCTION. PERFORM WORK CAREFULLY TO PROTECT PORTIONS OF THE EXISTING BOX CULVERT TO REMAIN. THE CITY WILL MEASURE THE QUANTITY OF REMOVAL ON A LUMP SUM BASIS. THE CITY WILL PAY FOR THE ACCEPTED QUANTITIES OF REMOVAL AT THE CONTRACT PRICE FOR ITEM 202 - PORTIONS OF STRUCTURE REMOVED, AS PER PLAN.

WATERPROOFING: TYPE 2 WATERPROOFING, PER CMS 512.09 AND 711.25, SHALL EXTEND VERTICALLY DOWN THE ENTIRE SIDES OF THE PRECAST CULVERT SECTIONS FOR ALL PORTIONS OF THE CULVERT WHICH SHALL BE IN CONTACT WITH THE BACKFILL. PAYMENT FOR THE MEMBRANE WATERPROOFING SHALL BE AT THE CONTRACT PRICE BID PER SQUARE YARD FOR ITEM 512 - TYPE 2 WATERPROOFING.

IF PAVEMENT IS NOT PLACED DIRECTLY ON TOP OF THE CULVERT, TYPE 2 WATERPROOFING, PER CMS 512.09 AND 711.25 SHALL BE APPLIED TO THE ENTIRE TOP SURFACE OF THE PRECAST CULVERT SECTIONS AND SHALL EXTEND ONE FOOT VERTICALLY DOWN THE SIDES FOR ALL PORTIONS OF THE CULVERT WHICH SHALL BE IN CONTACT WITH THE BACKFILL. PAYMENT FOR THE MEMBRANE WATERPROOFING SHALL BE AT THE CONTRACT PRICE BID PER SQUARE YARD FOR ITEM 512 - TYPE 2 WATERPROOFING.

IF PAVEMENT IS TO BE USED DIRECTLY ON TOP OF THE CULVERT, TYPE 3 WATERPROOFING, PER CMS 512.10 AND 711.29 SHALL BE APPLIED TO THE ENTIRE TOP SURFACE OF THE PRECAST CULVERT SECTIONS AND SHALL EXTEND ONE FOOT VERTICALLY DOWN THE SIDES FOR ALL PORTIONS OF THE CULVERT WHICH SHALL BE IN CONTACT WITH THE BACKFILL. PAYMENT FOR THE MEMBRANE WATERPROOFING SHALL BE AT THE CONTRACT PRICE BID PER SQUARE YARD FOR ITEM 512 - TYPE 3 WATERPROOFING.

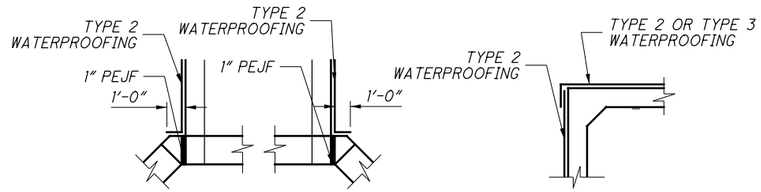

PLAN VIEW SECTION VIEW

WATERPROOFING DETAILS

BASIS OF PAYMENT: ALL LABOR, EQUIPMENT AND INCIDENTALS REQUIRED TO CONSTRUCT THE FOOTING, CUTOFF WALL, WINGWALLS AND FORESLOPE WALL SHALL BE INCLUDED WITH ITEM 511 - CLASS QC1 CONCRETE. PAYMENT FOR REINFORCING STEEL SHALL BE INCLUDED WITH ITEM 509 - EPOXY COATED REINFORCING STEEL.

LEGEND

C.J.	CONSTRUCTION JOINT	EXTEN.	EXTENSION	PEJF	PREFORMED EXPANSION JOINT FILLER	T&B	TOP AND BOTTOM
℄	CENTER LINE	E.F.	EACH FACE			TYP.	TYPICAL
CLR.	CLEAR	F.F.	FAR FACE	QTY.	QUANTITY	STR.	STRAIGHT
CONC.	CONCRETE	MAX.	MAXIMUM	REINF.	REINFORCING	(T)	TOP
DIA.	DIAMETER	MIN.	MINIMUM	SER.	SERIES	(B)	BOTTOM
DIM.	DIMENSION	N.F.	NEAR FACE	SHT.	SHEET	INC.	INCREMENT
				SPA.	SPACING		

CALCULATED BY	JAS	09/28/21
CHECKED BY	ADW	09/29/21

ESTIMATED QUANTITIES

ITEM	ITEM EXT	TOTAL	UNIT	DESCRIPTION	SHEET NO.
202	11201	LUMP		PORTIONS OF STRUCTURE REMOVED, AS PER PLAN	2&3
503	11100	LUMP		COFFERDAMS AND EXCAVATION BRACING	
503	21330	LUMP		UNCLASSIFIED EXCAVATION, INCLUDING ROCK AND/OR SHALE	
509	10000	4595	LB.	EPOXY COATED REINFORCING STEEL	
511	46010	14	CU. YD.	CLASS QC1 CONCRETE, RETAINING/WINGWALL NOT INCLUDING FOOTING	
511	46511	37	CU. YD.	CLASS QC1 CONCRETE, FOOTING	
511	46610	1	CU. YD.	CLASS QC1 CONCRETE, HEADWALL	
512	10100	42	SQ. YD.	SEALING OF CONCRETE SURFACES (EPOXY-URETHANE)	
512	33000	83	SQ. YD.	TYPE 2 WATERPROOFING	
512	33010	20	SQ. YD.	TYPE 3 WATERPROOFING	
516	13600	26	SQ. FT.	1" PREFORMED EXPANSION JOINT FILLER	
517	76300	44	LIN. FT.	RAILING, MISC.: STEEL RAILING	5
518	21200	16	CU. YD.	POROUS BACKFILL WITH GEOTEXTILE FABRIC	
601	32104	40	CU. YD.	ROCK CHANNEL PROTECTION, TYPE B WITH GEOTEXTILE FABRIC	
611	96320	22	LIN. FT.	14' X 7' CONDUIT, TYPE A, 706.05, 1' OF COVER	3

NOTE: TOTALS CARRIED TO GENERAL SUMMARY SHEET

DESIGN AGENCY
STRAND ASSOCIATES INC.
615 ELSINORE PLACE, STE. 320
CINCINNATI, OHIO 45202

DESIGNED	DRAWN	REVIEWED	DATE
JAS	JAS	JDH	09/25/21

CHECKED ADW | REVISED | STRUCTURE FILE NUMBER 5500737

GENERAL NOTES
BRIDGE NO. MIA-41-1085
OVER UNNAMED DITCH

MIA-41-10.32
PID No. 110253

2 / 6

112
194

S:\CIN\4300--4399\4354\004\Drawings\CAD\110253\drainage\sheets\10253DC002.dgn Sheet 10/1/2021 4:39:04 PM Allisonw

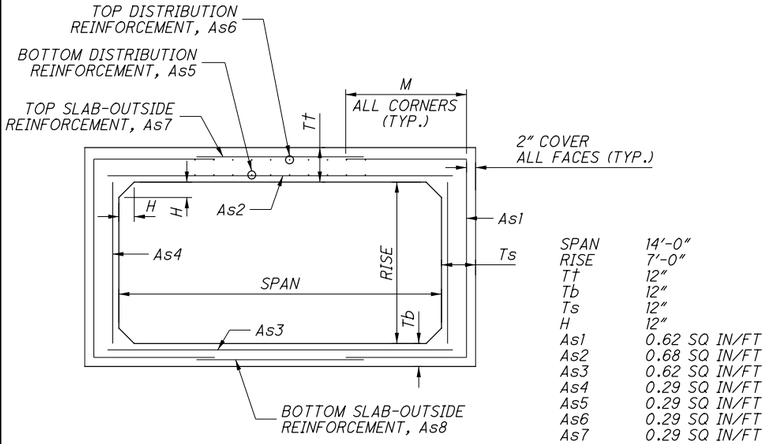

SPAN	14'-0"
RISE	7'-0"
Tt	12"
Tb	12"
Ts	12"
H	12"
As1	0.62 SQ IN/FT
As2	0.68 SQ IN/FT
As3	0.62 SQ IN/FT
As4	0.29 SQ IN/FT
As5	0.29 SQ IN/FT
As6	0.29 SQ IN/FT
As7	0.29 SQ IN/FT
As8	0.29 SQ IN/FT
M	5'-1"

NOTES:

1. MINIMUM CONCRETE COMPRESSIVE STRENGTH - F'c = 5,000 PSI.
2. MINIMUM YIELD STRENGTH FOR MAIN REINFORCEMENT - Fy = 65,000 PSI (PLAIN)
3. SIDEWALL OUTSIDE FACE STEEL (As1) MUST BE BENT AND EXTENDED DISTANCE "M" FROM THE END INTO THE OUTSIDE FACE OF THE TOP SLAB TO ACCOUNT FOR SHEAR. THE As1 STEEL AREA MAY BE USED FOR As7.

PRECAST BOX CULVERT TYPICAL SECTION

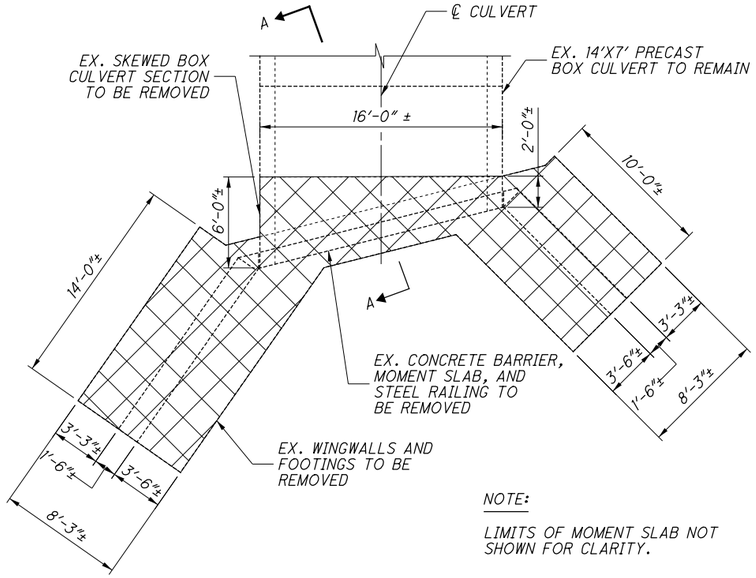

NOTE:

LIMITS OF MOMENT SLAB NOT SHOWN FOR CLARITY.

PLAN

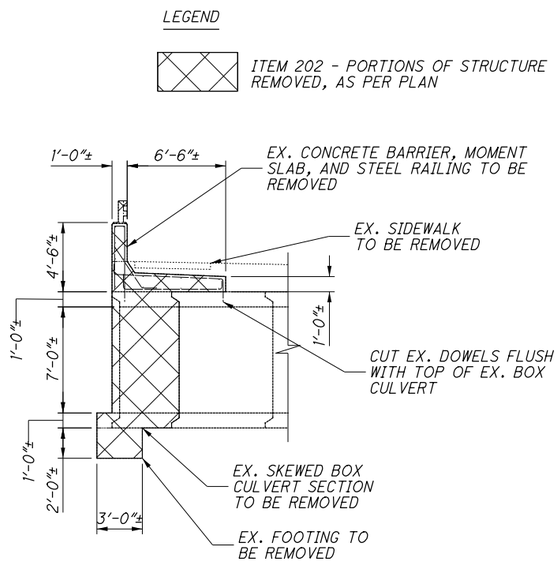

SECTION A-A

STRUCTURE REMOVAL DETAIL

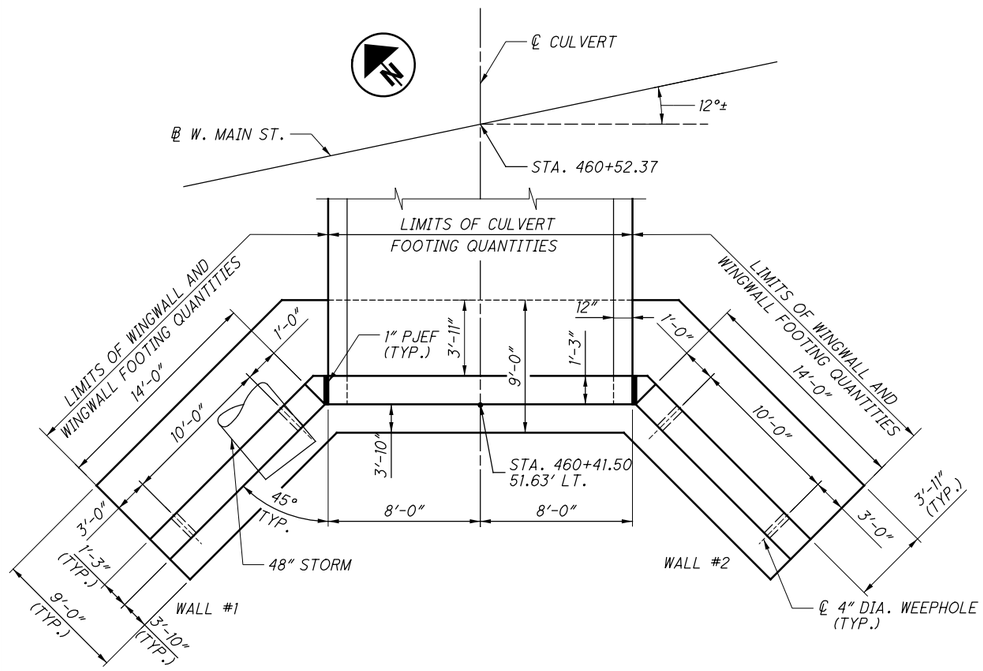

CULVERT & WINGWALL LAYOUT

(NOT TO SCALE)

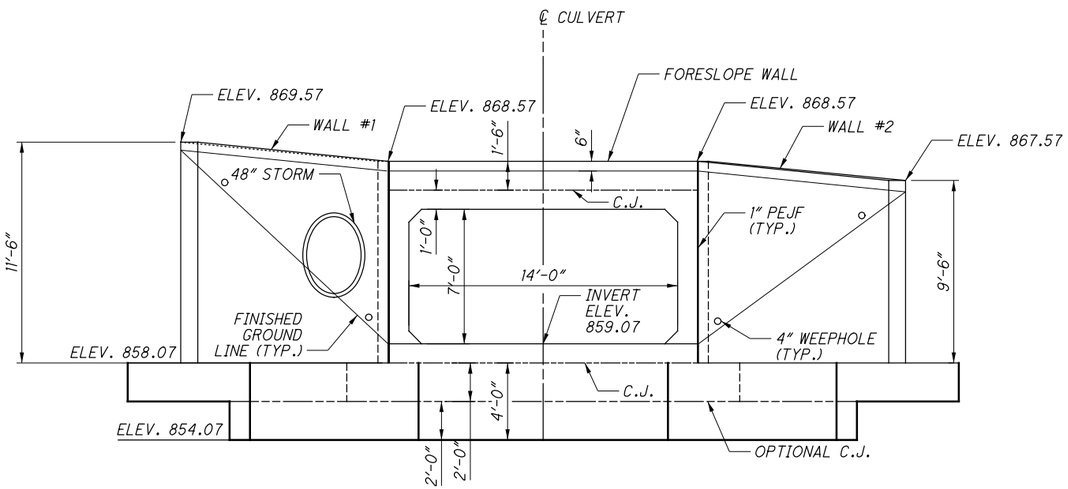

INLET ELEVATION

(NOT TO SCALE)

DESIGN AGENCY
STRAND ASSOCIATES INC.
615 ELSINORE PLACE, STE. 320
CINCINNATI, OHIO 45202

DESIGNED	DRAWN	REVIEWED	DATE
JAS	JAS	JDH	09/25/21
CHECKED	REVISED	STRUCTURE FILE NUMBER	
ADW		55007737	

REMOVAL DETAILS, LAYOUT AND ELEVATION

BRIDGE NO. MIA-41-1085
OVER UNNAMED DITCH

MIA-41-10.32
PID No. 110253

S:\CIN\4300--4399\4354\004\Drawings\CAD\110253\drainage\sheets\10253DC003.dgn Sheet 10/1/2021 4:39:05 PM Allisonw

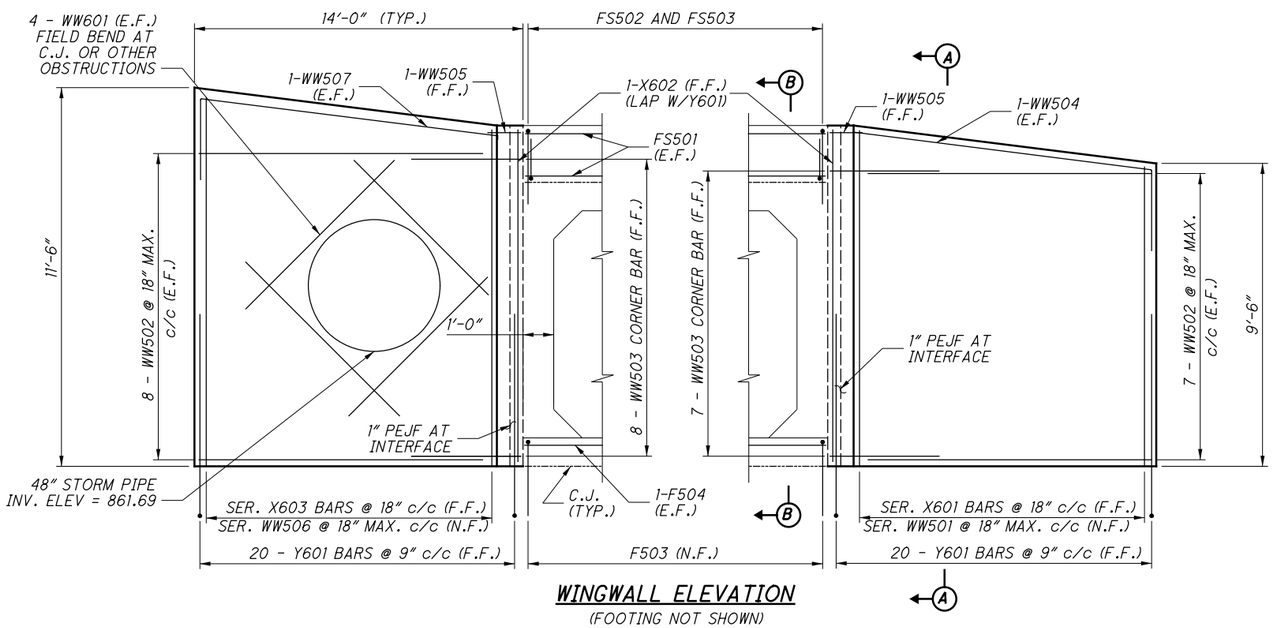

WINGWALL ELEVATION

(FOOTING NOT SHOWN)

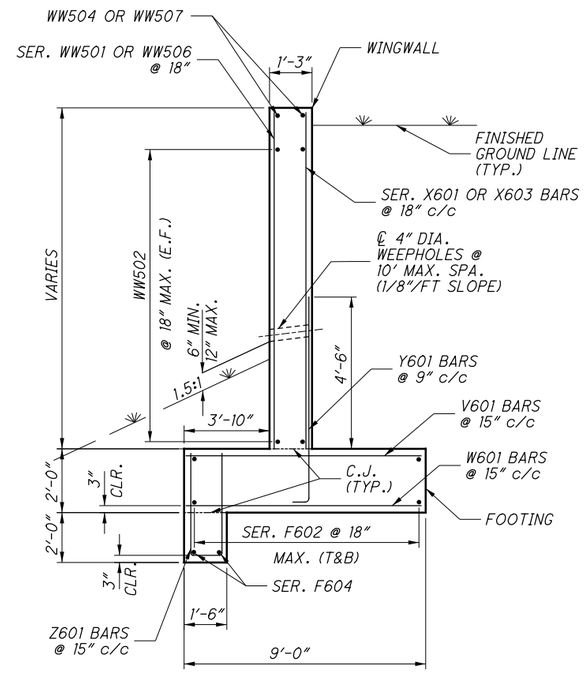

SECTION A-A

(RAILING AND POROUS BACKFILL NOT SHOWN FOR CLARITY)

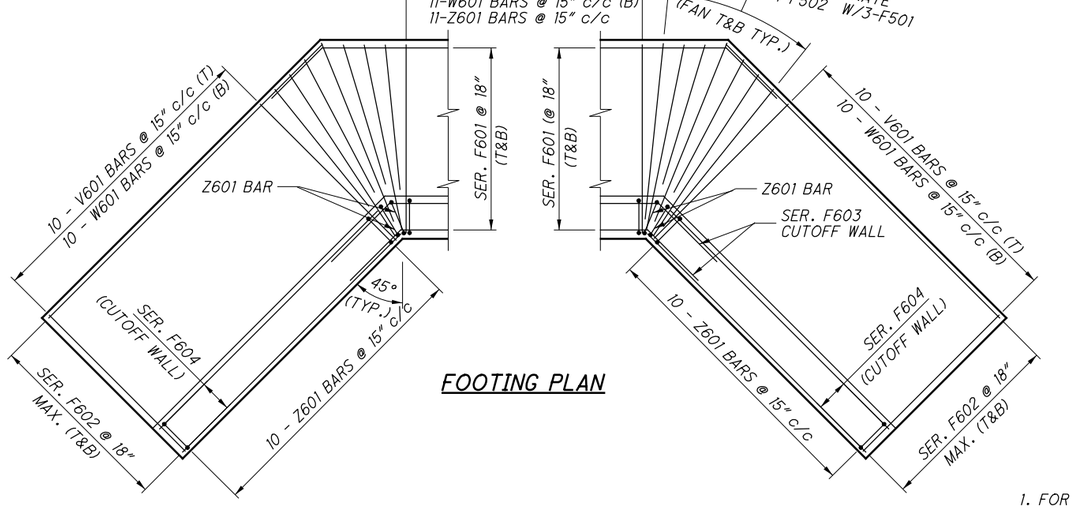

FOOTING PLAN

NOTES

1. FOR CULVERT LOCATION PLAN, SEE SHEET 3/6.
2. FOR PRECAST BOX CULVERT DETAILS, SEE SHEET 3/6.
3. THE BAR SIZE NUMBER IS SPECIFIED ON THE PLANS IN THE BAR MARK COLUMN. THE FIRST DIGIT INDICATES THE BAR SIZE NUMBER. FOR EXAMPLE, WW501 IS A NO.5 BAR. BAR DIMENSIONS SHOWN ARE OUT TO OUT. ALL REINFORCING STEEL SHALL BE EPOXY COATED.
4. THE LAP SPLICE LENGTHS USED IN THESE DETAILS ARE AS FOLLOWS: 2'-5" FOR #5 BARS; 2'-11" FOR #6 BARS.
5. STORM SEWER SHALL BE FIELD CAST THROUGH WINGWALL. REINFORCING BARS SHALL BE FIELD CUT OR FIELD BENT TO ACCOMODATE THE STORM SEWER OPENING. ALL COSTS FOR FIELD CUTTING, FIELD BENDING, AND PATCHING EPOXY COATING SHALL BE INCLUDED IN ITEM 509.

LEGEND:

C.J.	CONSTRUCTION JOINT	N.F.	NEAR FACE
CLR.	CLEAR	SER.	SERIES
DIA.	DIAMETER	STR.	STRAIGHT
E.F.	EACH FACE	(T)	TOP
F.F.	FAR FACE	(B)	BOTTOM
MAX.	MAXIMUM	T&B	TOP AND BOTTOM
MIN.	MINIMUM	TYP.	TYPICAL
PEJF	PREFORMED EXPANSION JOINT FILLER	INC.	INCREMENT

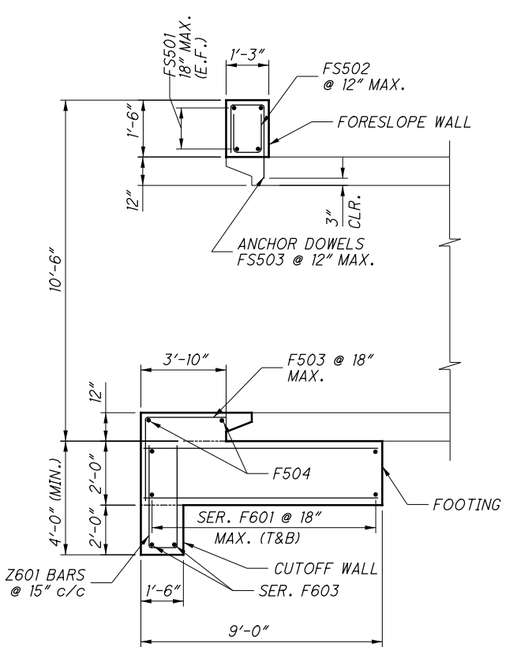

SECTION B-B

(CULVERT INLET BEVEL SHOWN)
(RAILING NOT SHOWN FOR CLARITY)

DESIGN AGENCY
STRAND ASSOCIATES INC.
615 ELSINORE PLACE, STE. 320
CINCINNATI, OHIO 45202

DESIGNED JAS | DRAWN JAS | REVIEWED JDH | DATE 09/25/21
CHECKED ADW | REVISED | STRUCTURE FILE NUMBER 55007737

CULVERT INLET HEADWALL DETAILS

BRIDGE NO. MIA-41-1085
OVER UNNAMED DITCH

MIA-41-10.32
PID No. 110253

4 / 6

114
194

S:\CIN\4300--4399\4354\004\Drawings\CAD\110253\drainage\sheets\10253DC004.dgn Sheet 10/1/2021 4:39:05 PM Allisonw

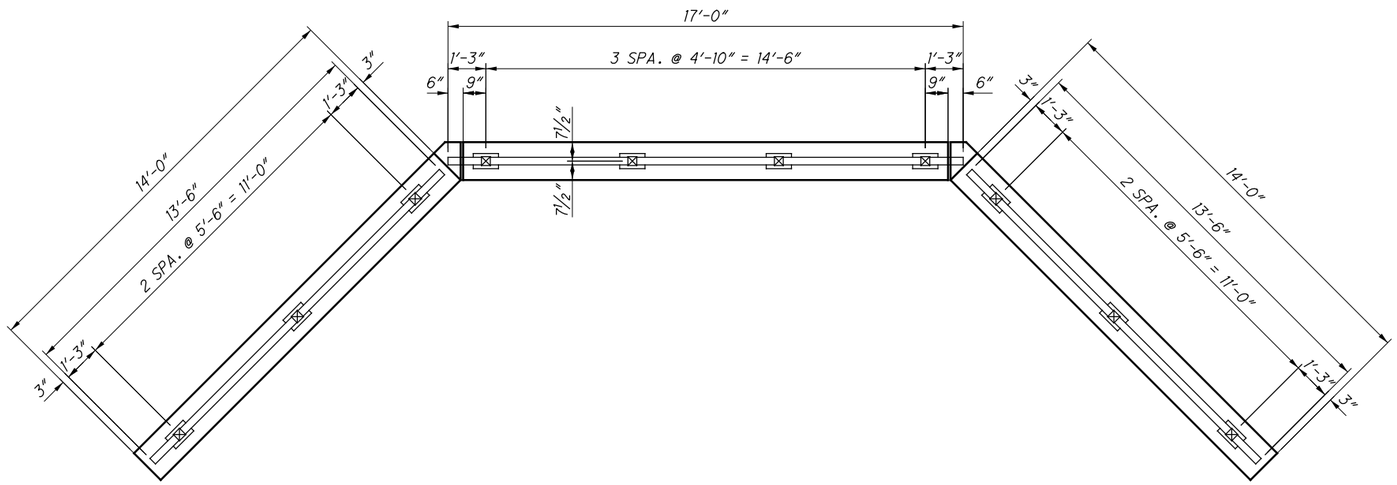

RAILING PLAN

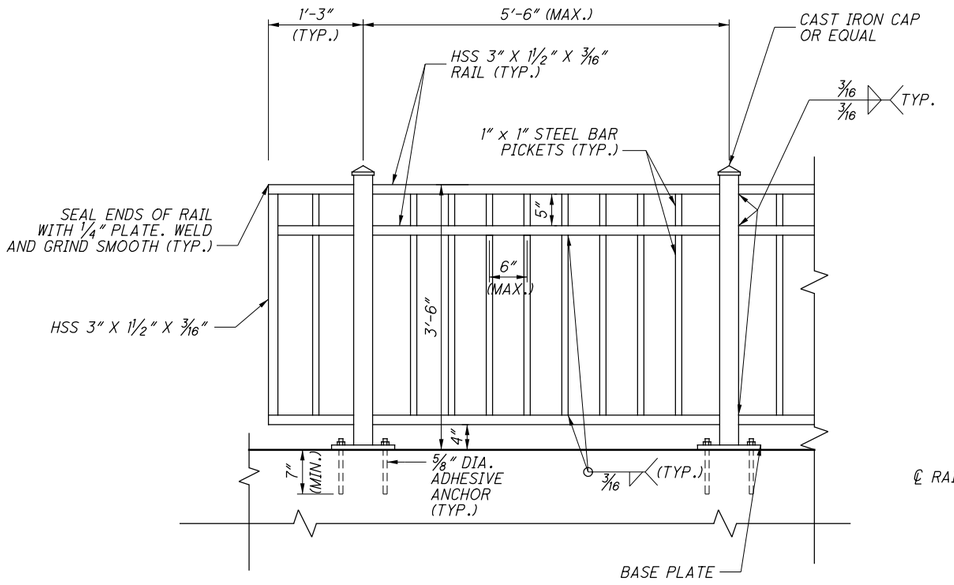

RAILING ELEVATION

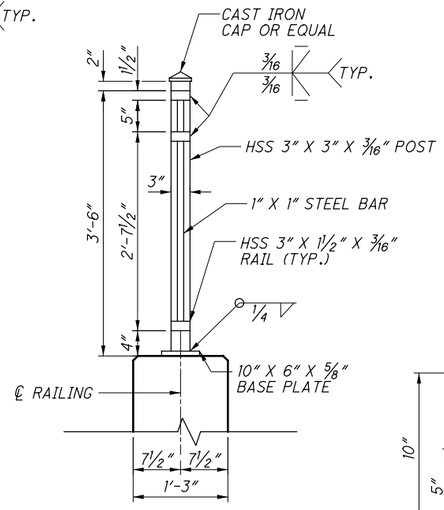

RAILING SECTION

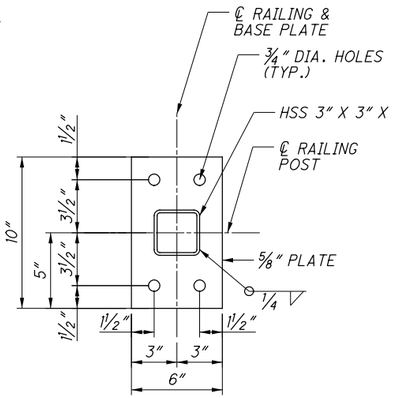

RAIL POST BASE PLATE

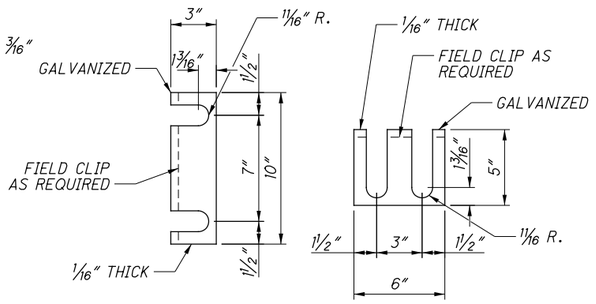

RAIL POST SHIM DETAIL

NOTES:

1. POST BASE PLATES SHALL BE FLAT WITH ALL SURFACES SMOOTH AND FREE FROM WARP AND ALL EDGES SMOOTH, STRAIGHT AND VERTICAL. ALL PLATE CUTS SHALL BE MACHINE OR MACHINE FLAME CUTS.
2. ALL PLATES AND BARS SHALL CONFORM TO ASTM A709 GRADE 36. ALL STRUCTURAL TUBING SHALL CONFORM TO ASTM A500 GRADE B.
3. CUT BOTTOM OF POST TO MAKE POST VERTICAL IN BOTH TRANSVERSE AND LONGITUDINAL DIRECTION.
4. PAINT RAILING IN ACCORDANCE WITH ODOT C&MS 514. PAINT COLOR SHALL BE BLACK.
5. STEEL SHIMS SHALL BE PROVIDED AND USED UNDER BASE PLATES WHERE REQUIRED FOR ALIGNMENT AND SHALL BE GALVANIZED.
6. RAILING SHALL BE FABRICATED IN FULL PANELS AS SHOWN.
7. TOUGH-UP PAINTING TO BE DONE AT COMPLETION OF STEEL RAILING INSTALLATION TO THE SATISFACTION OF THE CITY AT NO EXTRA COST.
8. FIELD MEASURE WINGWALLS AND FORESLOPE WALL TO VERIFY DIMENSIONS PRIOR TO FABRICATION.
9. CAULK AROUND PERIMETER OF BASE PLATES WITH NON-STAINING GRAY NON-BITUMINOUS JOINT SEALER.
10. THE 5/8 INCH DIA. THREADED ROD FOR ADHESIVE ANCHORS SHALL BE ASTM A193, GRADE B7, WITH ASTM A563 NUTS AND ASTM F436 WASHERS. MECHANICALLY GALVANIZE ALL ANCHOR HARDWARE ACCORDING TO ASTM B695, CLASS 65.
11. USE AN ANCHOR ADHESIVE EVALUATED ACCORDING TO ICCES REPORT AC308, "ACCEPTANCE CRITERIA FOR POST-INSTALLED ADHESIVE ANCHORS IN CONCRETE ELEMENTS", FOR CRACKED AND UNCRACKED CONCRETE APPLICATIONS. PUBLISHED ICCES REPORTS FOR ACCEPTABLE PRODUCTS ARE AVAILABLE AT:

    WWW.ICC-ES.ORG/EVALUATION_REPORTS/INDEX.SHTML

    SELECT FROM ONE OF THE FOLLOWING APPROVED PRODUCTS:

    POWERS PE1000+ EPOXY ADHESIVE ANCHOR SYSTEM (ICCES REPORT ESR-2583)

    CHEMOFAST C-RE 385 EPOXY ADHESIVE ANCHOR SYSTEM (ICCES REPORT ESR-2538)

    SIMPSON STRONG-TIE SET-XP EPOXY ADHESIVE ANCHORS (ICCES REPORT ESR-2508)

    WURTH WIT-PE500 EPOXY ADHESIVE ANCHORS (ICCES REPORT ESR-3051)

    HILTI-HY 200-R ADHESIVE ANCHOR SYSTEM (ICCES REPORT ESR-3187)

    INSTALL ADHESIVE ANCHORS ACCORDING TO MANUFACTURER'S INSTALLATION INSTRUCTIONS PUBLISHED IN SECTION 4.3 OF THE ICCES REPORTS LIST ABOVE. THE MINIMUM EMBEDMENT DEPTH (h_{ef}) FOR ANCHORS SHALL BE 7".
12. THE CITY WILL MEASURE THE QUANTITY BY THE FOOT. THE CITY WILL PAY FOR THE COMPLETED AND ACCEPTED QUANTITIES OF STEEL RAILING AT THE CONTRACT PRICE FOR ITEM 517 - RAILING, MISC.: STEEL RAILING.

DESIGN AGENCY
STRAND ASSOCIATES INC.
615 ELSINORE PLACE, STE. 320
CINCINNATI, OHIO 45202

DESIGNED	DRAWN	REVIEWED	DATE
JAS	JAS	JDH	09/25/21
CHECKED	REVISED	STRUCTURE FILE NUMBER	
ADW		5500737	

RAILING DETAIL
BRIDGE NO. MIA-41-1085
OVER UNNAMED DITCH

MIA-41-10.32
PID No. 110253

5 / 6

115
194

S:\CIN\4300--4399\4354\004\Drawings\CAD\110253\drainage\sheets\102533DC005.dgn Sheet 10/1/2021 4:39:05 PM Allisonw

INLET HEADWALL REINFORCING SCHEDULE

BAR MARK	NUMBER	LENGTH	WEIGHT (LBS.)	TYPE	BAR TYPE DIMENSIONS A	B	C	D	INC.
WINGWALLS									
	1	9'-4"							
X601	SERIES	TO	148	STR.					0'-1 1/4"
	of 10	10'-4"							
X602	2	10'-4"	31	STR.					
	1	10-4"							
X603	SERIES	TO	163	STR.					0'-1 1/4"
	OF 10	11'-4"							
Y601	40	7'-1"	426	1	1'-0"	6'-3"			
	1	9'-4"							
WW501	SERIES	TO	103	STR.					0'-1 1/4"
	of 10	10'-4"							
WW502	30	13'-8	428	STR.					
WW503	15	3'-11"	61	2	0'-10"	0'-3 1/4"	2'-1"	2'-11 1/4"	
WW504	2	16'-0"	33	3	13'-8"	0'-2"	2'-5"		
WW505	2	1'-6"	3	4	0'-10"	0'-3 1/4"			
	1	10'-4"							
WW506	SERIES	TO	113	STR.					0'-1 1/4"
	OF 10	11'-4"							
WW507	2	16'-0"	33	8	13'-8"	0'-2"	2'-5"		
WW601	8	10'-4"	124	STR.					
FOOTING & CUTOFF WALL									
V601	31	8'-8"	404	STR.					
W601	31	8'-8"	404	STR.					
Z601	35	8'-0"	421	5	3'-7"	1'-2"			
F501	12	7'-10"	98	STR.					
F502	16	6'-1"	102	STR.					
F503	12	6'-5"	80	1	3'-10"	2'-8"			
F504	2	15'-8"	33	STR.					
	2	19'-0"					13'-1 3/4"		
F601	SERIES	TO	475	6	2'-1"	2'-1"	TO		1'-2 3/8"
	of 7	26'-2"					20'-3 3/4"		
	4	12'-3"							
F602	SERIES	TO	591	STR.					0'-7 1/4"
	of 7	15'-10"							
	1	19'-0"					13'-1 3/4"		
F603	SERIES	TO	59	6	2'- 1"	2'- 1"	TO		0'-11 1/2"
	2	20'-0"					14'-1 1/4"		
	2	12'-3"							
F604	SERIES	TO	75	STR.					0'-6"
	2	12'-9"							
FORESLOPE WALL									
FS501	4	15'-8"	65	STR.					
FS502	17	3'-0"	53	5	1'-2"	0'-11"			
FS503	17	3'-11"	69	7	1'-2"	0'-11"	2'-1"		
		TOTAL	4,595						

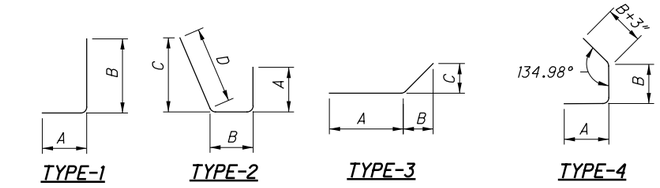

LEGEND:

INC. INCREMENT
STR. STRAIGHT

NOTES:

1. *THE BAR SIZE NUMBER IS SPECIFIED ON THE PLANS IN THE BAR MARK COLUMN. THE FIRST DIGIT INDICATES THE BAR SIZE NUMBER. FOR EXAMPLE, WW501 IS A NO.5 BAR. BAR DIMENSIONS SHOWN ARE OUT TO OUT. ALL REINFORCING STEEL SHALL BE EPOXY COATED.*

DESIGN AGENCY
STRAND ASSOCIATES INC.
615 ELSINORE PLACE, STE. 320
CINCINNATI, OHIO 45202

DESIGNED JAS | DRAWN JAS | REVIEWED JDH | DATE 09/25/21
CHECKED ADW | REVISED — | STRUCTURE FILE NUMBER 55007377

STEEL REINFORCING LIST
BRIDGE NO. MIA-41-1085
OVER UNNAMED DITCH

MIA-41-10.32
PID No. 110253

6 / 6

115A
194

S:\CIN\4300--4399\4354\004\Drawings\CAD\110253\drainage\sheets\10253DC006.dgn Sheet 10/1/2021 4:39:06 PM Allisonw

SHEET NO.	REFERENCE NO.	STATION FROM	STATION TO	SIDE	638 6" WATER MAIN DUCTILE IRON PIPE ANSI CLASS 52 PUSH-ON JOINTS AND FITTINGS, AS PER PLAN	2" COPPER SERVICE BRANCH AS PER PLAN	METER AND CHAMBER REMOVED AND RESET, AS PER PLAN	FIRE HYDRANT REMOVED AND RESET	6" FIRE HYDRANT, AS PER PLAN	6" GATE VALVE AND VALVE BOX	8" GATE VALVE AND VALVE BOX
					FT	FT	EACH	EACH	EACH	EACH	EACH
117-119	WM-1	500+10 (W.M.)	509+07.72 (W.M.)	-	897.72						
42	WM-2	458+51 (SR-41)	458+72 (SR-41)	-	36						
117	FH-1	500+31 (W.M.)		LT					1		
119	FH-2	508+94 (W.M.)		LT					1		
117	CS-1	500+10 (W.M.)		RT							
117	CS-2	500+10 (W.M.)		LT							
119	CS-3	508+98 (W.M.)		-							
117	V-1	500+10 (W.M.)		LT							1
117	V-2	500+13 (W.M.)		-						1	
118	WS1	503+93 (W.M.)		LT		22					
118	WS2	504+32 (W.M.)		LT		22					
118	WS3	505+30 (W.M.)		LT		22					
119	WS4	506+09 (W.M.)		LT		22					
44	WS5	465+15 (SR-41)		LT		50					
44	WS6	465+39 (SR-41)		RT		20					
44	WS7	468+43 (SR-41)		LT		50					
44	WS8	469+96 (SR-41)		RT		22					
45	WS9	471+39 (SR-41)		RT		20					
42	WW1	457+90 (SR-41)		RT				1			
43	WW2	460+74 (SR-41)		RT			1				
43	WW3	461+14 (SR-41)		RT			1				
43	WW16	461+74 (SR-41)		RT			1				
43	WW4	462+40 (SR-41)		RT			1				
43	WW5	463+82 (SR-41)		RT			1				
44	WW6	467+95 (SR-41)		RT			1				
44	WW7	468+84 (SR-41)		LT			1				
44	WW8	469+57 (SR-41)		LT			1				
45	WW9	470+48 (SR-41)		LT			1				
45	WW10	470+55 (SR-41)		RT				1			
45	WW11	471+05 (SR-41)		LT			1				
45	WW12	471+51 (SR-41)		LT			1				
45	WW13	474+89 (SR-41)		RT			1				
47	WW14	480+40 (SR-41)		RT			1				
47	WW15	481+33 (SR-41)		RT			1				
TOTALS CARRIED TO GENERAL SUMMARY					934	250	14	2	2	1	1

CALCULATED ATW
CHECKED JCH

WATER WORK SUBSUMMARY

MIA-41-10.32

116
194

\\strand.com\projects\CIN\4300--4399\4354\004\Drawings\CAD\110253\roadway\sheets\Summaries\110253WS001.dgn Sheet 10/1/2021 4:39:06 PM Allisonw

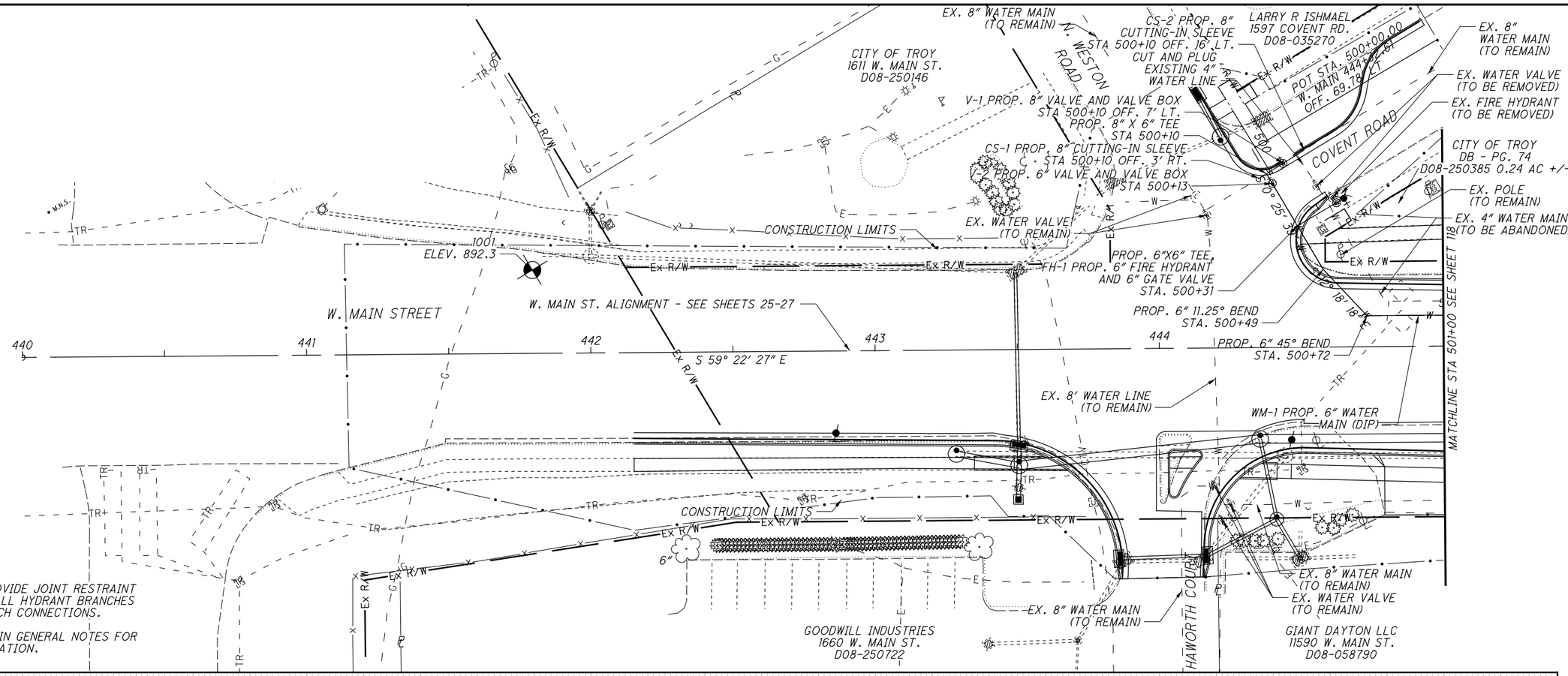

NOTES:

1. CONTRACTOR TO PROVIDE JOINT RESTRAINT AS SPECIFIED AND ON ALL HYDRANT BRANCHES AND SERVICE TEE BRANCH CONNECTIONS.

2. REFER TO WATER MAIN GENERAL NOTES FOR WATER SERVICE INFORMATION.

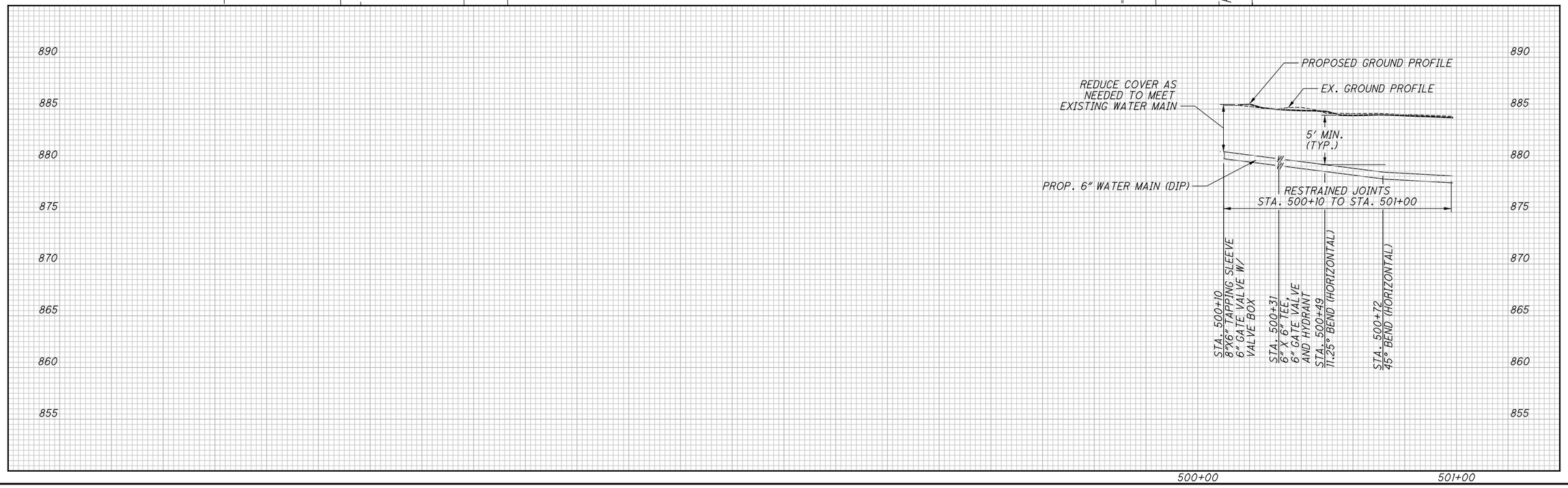

HORIZONTAL SCALE IN FEET
0 10 20 40

CALCULATED MET
CHECKED AWA

WATER MAIN-STA 500+00 TO STA 501+00 WEST MAIN STREET (SR 41)

MIA-41-10.32

117
194

10/1/2021 4:43:09 PM Allisonw

S:\CIN\4300--4399\4354\004\Drawings\CAD\110253\drainage\sheets\WM Sheet 110253GP001.dgn

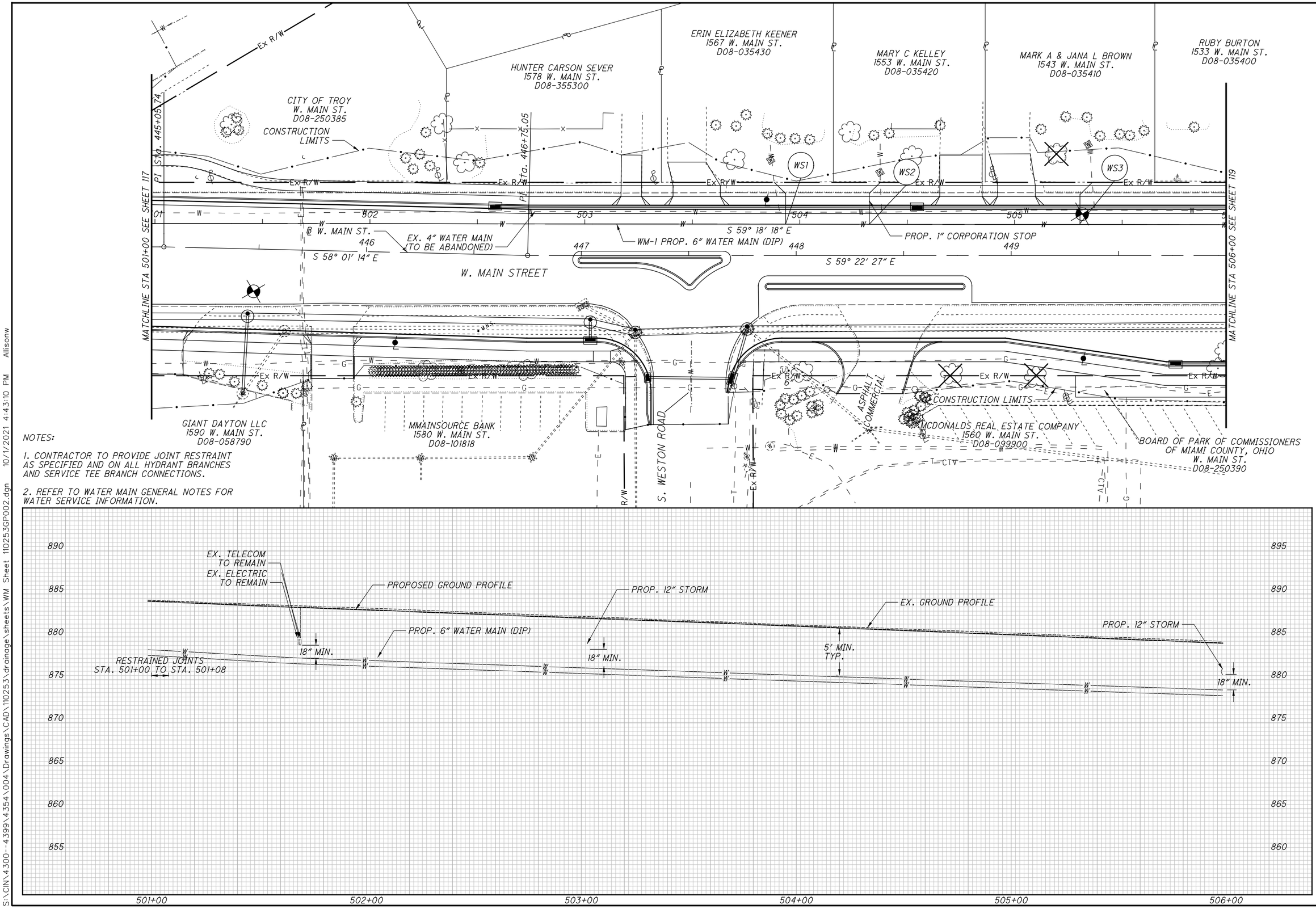

NOTES:

1. CONTRACTOR TO PROVIDE JOINT RESTRAINT AS SPECIFIED AND ON ALL HYDRANT BRANCHES AND SERVICE TEE BRANCH CONNECTIONS.

2. REFER TO WATER MAIN GENERAL NOTES FOR WATER SERVICE INFORMATION.

HORIZONTAL SCALE IN FEET
0 10 20 40

CALCULATED MET
CHECKED AWA

WATER MAIN-STA 501+00 TO STA 506+00
WEST MAIN STREET (SR 41)

MIA-41-10.32

118
194

S:\CIN\4300-4399\4354\004\Drawings\CAD\110253\drainage\sheets\WM Sheet 110253GP002.dgn 10/1/2021 4:43:10 PM Allisonw

THE MISSIONARY CHURCH EAST CENTRAL DISTRICT
1509 W. MAIN ST.
D08-035382

EX.WATER VALVE (TO REMAIN)

WATER MAIN WORK ENDS AT STA. 509+00

CS-3 PROP. 6" CUTTING-IN SLEEVE
STA. 508+98

EX. CORPORATION STOP
(TO REMAIN)

EX. HYDRANT AND GATE VALVE
(TO BE REMOVED)

PROP. 6" X 6" TEE,
EX-2 PROP. 6" FIRE HYDRANT
AND 6" GATE VALVE
STA. 508+94

EX. 6" WATER MAIN
(TO REMAIN)

RUBY BURTON
1533 W. MAIN ST.
D08-035400

CONSTRUCTION LIMITS

N. DORSET ROAD

SOLUTIONS REAL ESTATE
INVESTMENTS LLC
1496 CROYDON RD.
D08-034630

STUCK PROPERTIES 1 LLC
1479 W. MAIN ST.
D08-034640 0.16 AC +/-

AMANDA L. WEHUNT
1463 W. MAIN ST.
D08-034650

ROT Sta. 509+07.72

CENTERPOINT ENERGY
W. MAIN ST.
D08-404036

N 29° 37' 38" E

N 74° 07' 22" E

PROP. 6"
45° BEND
STA. 508+90

MATCHLINE STA 506+00 SEE SHEET 118

WS4

WM-1 PROP. 6" WATER MAIN (DIP)

S 59° 52' 37" E

W. MAIN STREET

EX. 4" WATER MAIN
(TO BE ABANDONED)

S 59° 22' 27" E

PROP. 6" 45° BEND
STA. 508+43

BOARD OF PARK COMMISSIONERS OF MIAMI COUNTY, OHIO
W. MAIN ST. D08-250390

BOARD OF PARK COMMISSIONERS OF MIAMI COUNTY, OHIO
DB 434 - PG. 140 D08-250392 0.11 AC +/-

CONSTRUCTION LIMITS

MCDONALDS REAL ESTATE COMPANY
1560 W. MAIN ST.
D08-099900

NATIONAL CITY BANK
OF DAYTON
10 S. DORSET RD.
D08-099990

NATIONAL CITY BANK
OF DAYTON
10 S. DORSET RD.
D08-099980

S. DORSET ROAD

DW28 TROY OHIO LLC
1420 W. MAIN ST.
D08-100020

DW28 TROY OHIO LLC
1420 W. MAIN ST.
D08-100040

NOTES:

1. CONTRACTOR TO PROVIDE JOINT RESTRAINT AS SPECIFIED AND ON ALL HYDRANT BRANCHES AND SERVICE TEE BRANCH CONNECTIONS.

2. REFER TO WATER MAIN GENERAL NOTES FOR WATER SERVICE INFORMATION.

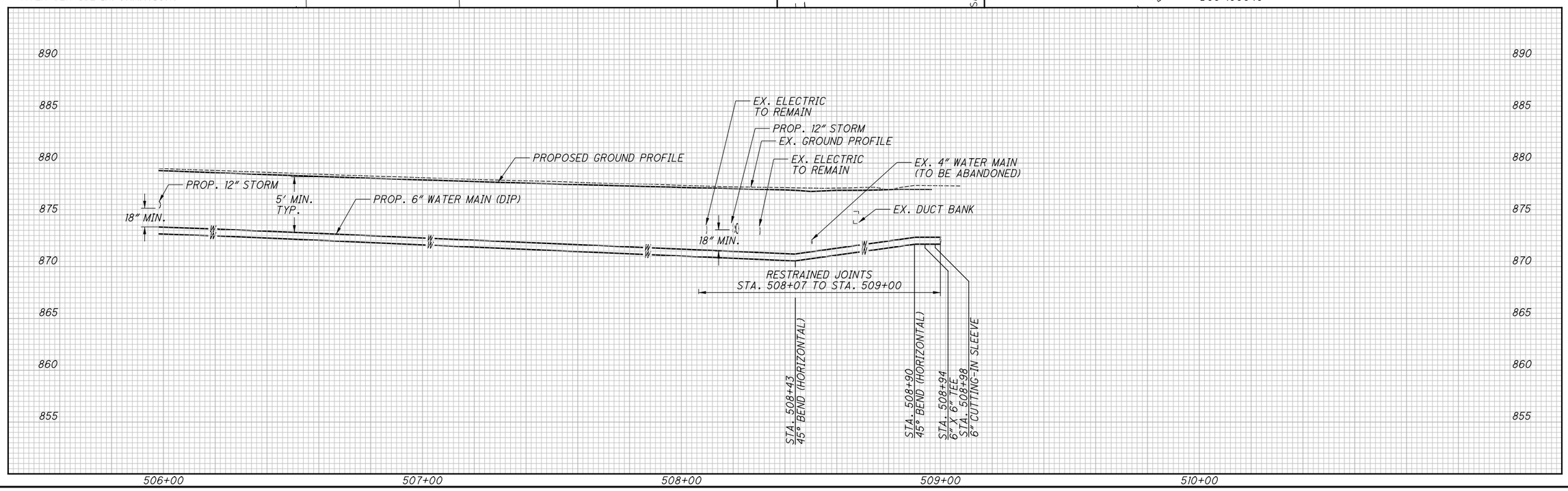

HORIZONTAL SCALE IN FEET
0 10 20 40

CALCULATED MET
CHECKED AWA

WATER MAIN-STA 506+00 TO STA 509+00
WEST MAIN STREET (SR 41)

MIA-41-10.32

119
194

S:\CIN\4300-4399\4354\004\Drawings\CAD\110253\drainage sheets\WM Sheet 110253GP003.dgn 10/1/2021 4:43:10 PM Allisonw

WATER SERVICE CONNECTIONS

THE FOLLOWING ADDRESSES WILL HAVE WATER SERVICES INSTALLED ALONG THE PROPOSED WATER MAIN. SEE SHEETS 117 - 119.

APPROX. PROPERTY STATION	WATER SERVICE TAG	ADDRESS	PARCEL NO.	SERVICE SIZE
503+93	WS1	1567 W. MAIN ST.	D08-035430	1-INCH
504+32	WS2	1553 W. MAIN ST.	D08-035420	1-INCH
505+30	WS3	1543 W. MAIN ST.	D08-035410	1-INCH
506+09	WS4	1533 W. MAIN ST.	D08-035400	1-INCH

WATER SERVICE REPLACED CONNECTIONS

THE FOLLOWING ADDRESSES WILL HAVE NEW WATER SERVICES INSTALLED AS PART OF THIS PROJECT. NEW SERVICE LINE SHALL BE K-COPPER RUN FROM THE EXISTING MAIN PARALLEL TO THE EXISTING SERVICE LINE. A NEW CORP STOP AND SERVICE BOX SHALL BE INSTALLED AS SHOWN ON THE PLANS AND SHALL CONFORM TO ODOT SPEC 638 AND CITY OF TROY CONSTRUCTION STANDARD -800 WATER, LATEST EDITION.

STA.	PARCEL ID	ADDRESS
465+15	D08-098460	1301 W. MAIN ST.
465+39	D08-096160	1302 W. MAIN ST.
468+43	D08-097200	1251 W. MAIN ST.
469+96	D08-096060	1234 W. MAIN ST.
471+39	D08-095980	1220 W. MAIN ST.

THIS WORK HAS BEEN INCLUDED IN THE WATER WORK SUBSUMMARY UNDER ITEM 638 - 2" COPPER SERVICE BRANCH, AS PER PLAN.

WATER SERVICE EXTENSION

THE FOLLOWING TABLE IDENTIFIES LOCATIONS WHERE WATER VALVES AND EQUIPMENT WILL HAVE TO BE RELOCATED DUE TO PROPOSED CURB PLACEMENT. THE CONTRACTOR IS TO INSTALL A JOINT WITHIN 1 FT OF THE EXISTING STRUCTURE LOCATION, INSTALL SERVICE CONDUIT, AND PLACE THE RELOCATED STRUCTURE WITHIN THE PROPOSED TREE LAWN. THE STRUCTURE SHALL BE PLACED NO LESS THAN 18" BEHIND BACK OF CURB.

STA	LT/RT
457+90	RT
460+74	RT
461+14	RT
461+74	RT
462+40	RT
463+82	RT
467+95	RT
468+84	LT
469+57	LT
470+48	LT
470+55	RT
471+05	LT
471+51	LT
474+89	RT
480+40	RT
481+33	RT

THIS WORK SHALL BE PAID FOR UNDER ITEM 638, METER AND CHAMBER REMOVED AND RESET, AS PER PLAN.

ALL WORK SHALL BE COMPLETED IN CONFORMANCE WITH THE CITY OF TROY SPECIFICATIONS FOUND ON THEIR WEBSITE (WWW.TROYOHIO.ORG).

EXPLORATORY EXCAVATIONS (POT HOLES) TO FIND EXISTING WATER MAINS AND THE EXISTNG SEWER MAIN IS NOT A PAY ITEM AND IS CONSIDERED PART OF THE NORMAL CONSTRUCTION OF INSTALLING THE PROPOSED WATER MAIN.

ITEM 202 VALVE BOX REMOVED, AS PER PLAN

VALVE AND VALVE BOX TO BE REMOVED AS SHOWN ON PLANS. ALL ABANDONED VALVES AND VALVE BOXES SHALL BE SALVAGED AND RETURNED TO OWNER. CONTRACTOR SHALL DELIVER SALVAGED ITEMS TO OWNER.

ITEM 638 6" WATER MAIN DUCTILE IRON PIPE ANSI CLASS 52, PUSH-ON JOINTS AND FITTINGS, AS PER PLAN

ALL PIPE SHALL CONFORM TO THE ODOT SPEC 638, AND CITY OF TROY CONSTRUCTION STANDARD-800 WATER, LATEST EDITION. INSTALL PIPE AS SHOWN ON PLANS VIA TRENCHLESS TECHNOLOGY. PAYMENT FOR ALL MATERIAL, EQUIPMENT AND LABOR NECESSARY SHALL BE INCLUDED IN THE UNIT PRICE BID FOR ITEM 638 - 8" WATER MAIN DUCTILE IRON PIPE ANSI CLASS 52, PUSH-ON JOINTS AND FITTINGS, AS PER PLAN.

ITEM 638 FIRE HYDRANT REMOVED, AS PER PLAN

FIRE HYDRANTS TO BE REMOVED AS SHOWN ON PLANS SHALL BE ACCOMPLISHED BY CLOSING THE WATER VALVE, AND REMOVING EXISTING FIRE HYDRANT, CURB STOP BOXES AND VALVE BOXES. ALL ABADONED HYDRANTS AND ASSOCIATED VALVE BOXES SHALL BE SALVAGED AND RETURNED TO OWNER. CONTRACTOR SHALL DELIVER SALVAGED ITEMS TO OWNER.

ITEM 638 2" COPPER SERVICE BRANCH, AS PER PLAN

NEW SERVICE LINE SHALL BE K-COPPER RUN FROM THE NEW MAIN PARALLEL TO THE EXISTING LINE AND A NEW CURB STOP SHALL BE INSTALLED AS SHOWN ON THE PLANS AND SHALL CONFORM TO ODOT SPEC 638 AND CITY OF TROY CONSTRUCTION STANDARD -800 WATER, LATEST EDITION. PAYMENT PER CONNECTION AND PER LINEAL FOOT SHALL INCLUDE ALL MATERIALS, LABOR, AND EQUIPMENT TO INSTALL NEW SERVICES AND ABANDON OLD SERVICES.

ITEM 638 6" FIRE HYDANT, AS PER PLAN

NEW FIRE HYDRANTS SHALL CONFORM TO ODOT SPEC 638 AND CITY OF TROY CONSTRUCTION STANDARD -800 WATER, LATEST EDITION. PAYMENT PER FIRE HYDRANT, VALVE, AND VALVE BOX SHALL INCLUDE ALL MATERIALS, LABER, AND EQUIPMENT REQUIRED TO INSTALL HYDRANT BRANCH PIPING, VALVING, AND FIRE HYDRANT.

CALCULATED PER
CHECKED AWA

WATER MAIN NOTES

MIA-41-10.32

\\strand.com\projects\CIN\4300--4399\4354\004\Drawings\CAD\110253\drainage\sheets\WM Notes 110253UN001.dgn 10/1/2021 4:39:09 PM Allisonw

SHEET NO.	REFERENCE NO.	LOCATION	STATION FROM	STATION TO	SIDE	644 EDGE LINE, 4"	644 LANE LINE, 4"	644 CENTER LINE	644 CHANNELIZING LINE, 8"	644 STOP LINE	644 CROSSWALK LINE	644 CHEVRON LINE	644 LANE ARROW	644 WORD ON PAVEMENT
						MILE	MILE	MILE	FT	FT	FT	FT	EACH	EACH
123	AR-1	WEST MAIN ST	442+76		RT								1	
123	AR-2	WEST MAIN ST	443+71		RT								1	
123	AR-3	COVENT RD	20+49		CL								1	
123	AR-4	WEST MAIN ST	445+77		RT								1	
123	AR-5	WEST MAIN ST	447+89		RT								1	
123	AR-6	WEST MAIN ST	448+27		RT								1	
123	AR-7	WEST MAIN ST	448+42		RT								1	
123	AR-8	WEST MAIN ST	448+55		RT								1	
123	AR-9	WEST MAIN ST	449+21		RT								1	
124	AR-10	WEST MAIN ST	450+14		RT								1	
124	AR-11	WEST MAIN ST	450+80		RT								1	
124	AR-12	WEST MAIN ST	450+80		RT								1	
124	AR-13	WEST MAIN ST	451+46		RT								1	
124	AR-14	WEST MAIN ST	451+46		RT								1	
124	AR-15	WEST MAIN ST	452+12		RT								1	
124	AR-16	WEST MAIN ST	452+12		RT								1	
124	AR-17	WEST MAIN ST	453+36		RT								1	
124	AR-18	WEST MAIN ST	454+02		RT								1	
124	AR-19	WEST MAIN ST	454+68		RT								1	
124	AR-20	WEST MAIN ST	455+40		RT								1	
124	AR-21	WEST MAIN ST	457+19		RT								1	
124	AR-22	WEST MAIN ST	459+29		RT								1	
125	AR-23	WEST MAIN ST	461+78		RT								1	
125	AR-24	WEST MAIN ST	464+43		CL								1	
125	AR-25	WEST MAIN ST	465+20		CL								1	
125	AR-26	WEST MAIN ST	467+56		CL								1	
126	AR-27	WEST MAIN ST	471+92		CL								1	
126	AR-28	WEST MAIN ST	476+28		CL								1	
126	AR-29	WEST MAIN ST	478+35		CL								1	
127	AR-30	WEST MAIN ST	480+41		CL								1	
123	CH-1	WEST MAIN ST	442+56	443+81	RT				123					
123	CH-2	WEST MAIN ST	442+56	443+81	RT				125					
123	CH-3	WEST MAIN ST	447+79	449+47	CL				168					
123	CH-4	WEST MAIN ST	449+72	452+22	RT				250					
124	CH-5	WEST MAIN ST	450+22	452+22	RT				200					
124	CH-6	WEST MAIN ST	450+22	452+22	RT				201					
124	CH-7	WEST MAIN ST	453+24	454+76	CL				152					
124	CH-8	WEST MAIN ST	453+25	454+76	RT				151					
123	CL-1	WEST MAIN ST	444+52	447+07	RT			0.05						
123	CL-2	WEST MAIN ST	444+52	447+79	CL			0.06						
123	CL-3	WEST MAIN ST	448+34	448+42	RT			0.01						
124	CL-4	WEST MAIN ST	455+28	457+84	CL			0.05						
124	CL-5	WEST MAIN ST	455+40	457+84	RT			0.05						
124	CL-6	WEST MAIN ST	458+90	459+68	CL			0.01						
124	CL-7	WEST MAIN ST	458+90	459+68	RT			0.01						
125	CL-8	WEST MAIN ST	460+52	462+91	LT			0.05						
125	CL-9	WEST MAIN ST	460+53	462+92	RT			0.05						
125	CL-10	WEST MAIN ST	463+58	466+00	LT			0.05						
125	CL-11	WEST MAIN ST	463+58	466+00	RT			0.05						
125	CL-12	WEST MAIN ST	466+76	477+08	LT			0.01						
125	CL-13	WEST MAIN ST	466+76	477+08	RT			0.01						
126	CL-14	WEST MAIN ST	477+79	478+91	LT			0.02						
126	CL-15	WEST MAIN ST	477+79	478+91	RT			0.02						
126	CL-16	WEST MAIN ST	479+61	481+50	LT			0.04						
126	CL-17	WEST MAIN ST	479+61	481+50	RT			0.04						
TOTALS CARRIED TO GENERAL SUMMARY						0.00	0.00	0.56	1370	0	0	0	30	0

CALCULATED ATW
CHECKED JCH

PAVEMENT MARKING SUBSUMMARY

MIA-41-10.32

\\strand.com\projects\CIN\4300--4399\4354\004\Drawings\CAD\110253\roadway\sheets\Summaries\110253TS001.dgn Sheet 10/1/2021 4:39:10 PM Allisonw

PAVEMENT MARKING SUBSUMMARY

CALCULATED ATW
CHECKED JCH

644

SHEET NO.	REFERENCE NO.	LOCATION	STATION FROM	STATION TO	SIDE	EDGE LINE, 4" MILE	LANE LINE, 4" MILE	CENTER LINE MILE	CHANNELIZING LINE, 8" FT	STOP LINE FT	CROSSWALK LINE FT	CHEVRON LINE FT	LANE ARROW EACH	WORD ON PAVEMENT EACH
123	CR-1	WEST MAIN ST	443+62	444+03	RT						72			
123	CR-2	WEST MAIN ST	444+11	444+33	RT						33			
123	CR-3	NORTH WESTON ROAD	443+76	444+48	LT						139			
123	CR-4	NORTH WESTON ROAD	10+90	10+68	CL						76			
123	CR-5	COVENT RD	20+25	20+30	CL						37			
123	CR-6	WEST MAIN ST	447+22	447+78	RT						99			
124	CR-7	WEST MAIN ST	452+26	452+34	CL						150			
124	CR-8	WEST MAIN ST	452+34	453+10	RT						144			
124	CR-9	WEST MAIN ST	452+50	453+03	LT						93			
124	CR-10	WEST MAIN ST	453+08	453+26	CL						141			
124	CR-11	WEST MAIN ST	51+71	51+66	RT						87			
124	CR-12	WEST MAIN ST	459+91	460+40	LT						76			
125	CR-13	WEST MAIN ST	463+03	463+47	RT						80			
125	CR-14	WEST MAIN ST	80+39	80+47	LT						75			
125	CR-15	WEST MAIN ST	91+16	91+21	RT						79			
125	CR-16	WEST MAIN ST	100+33	100+40	LT						77			
124	CV-1	WEST MAIN ST	450+22	452+22	RT							51		
124	CV-2	WEST MAIN ST	453+24	454+76	RT							15		
123	DY-1	WEST MAIN ST	441+15	442+56	RT			0.03						
123	DY-2	WEST MAIN ST	441+15	443+81	LT			0.05						
123	DY-3	WEST MAIN ST	449+60	450+22	RT			0.05						
124	DY-4	SOUTH DORSET ROAD	41+86	41+96	CL			0.00						
124	DY-5	NORTH DORSET ROAD	43+14	43+29	LT			0.00						
124	DY-6	WEST MAIN ST	453+27	454+77	RT			0.04						
124	DY-7	WEST MAIN ST	454+77	455+28	RT			0.01						
123	ELW-1	WEST MAIN ST	441+15	443+49	LT	0.04								
123	ELY-1	WEST MAIN ST	444+52	447+89	CL	0.02								
123	ELY-2	WEST MAIN ST	446+98	447+26	RT	0.01								
123	ELY-3	WEST MAIN ST	447+83	449+60	RT	0.03								
123	ELY-4	WEST MAIN ST	447+83	449+60	RT	0.03								
123	LL-1	WEST MAIN ST	441+15	443+45	RT		0.04							
123	LL-2	WEST MAIN ST	441+15	443+65	LT		0.05							
123	LL-3	WEST MAIN ST	444+52	446+98	RT		0.05							
123	LL-4	WEST MAIN ST	444+52	452+05	LT		0.14							
123	LL-5	WEST MAIN ST	447+85	451+95	RT		0.08							
124	LL-6	WEST MAIN ST	453+23	459+68	LT		0.12							
124	LL-7	WEST MAIN ST	453+28	457+75	RT		0.08							
124	LL-8	WEST MAIN ST	458+90	462+92	RT		0.08							
125	LL-9	WEST MAIN ST	460+52	465+99	LT		0.10							
125	LL-10	WEST MAIN ST	463+58	477+01	RT		0.25							
125	LL-11	WEST MAIN ST	466+76	478+60	LT		0.22							
126	LL-12	WEST MAIN ST	477+79	481+31	RT		0.07							
126	LL-13	WEST MAIN ST	479+61	481+31	LT		0.03							
123	SL-1	WEST MAIN ST	441+15		LT					29				
123	SL-2	WEST MAIN ST	443+81		RT					15				
123	SL-3	NORTH WESTON ROAD	10+49		RT					32				
123	SL-4	SOUTH WESTON ROAD	447+50	447+70	RT					20				
124	SL-5	WEST MAIN ST	452+22		RT					50				
124	SL-6	NORTH DORSET ROAD	452+58	452+82	RT					25				
124	SL-7	SOUTH DORSET ROAD	452+70	453+10	RT					36				
124	SL-8	WEST MAIN ST	453+21	453+27	LT					40				
124	SL-9	SOUTH NORWICH	51+83		RT					17				
125	SL-10	NORTH NORWICH	460+03	460+20	RT					18				
125	SL-11	SOUTH LANE	463+25	463+44	RT					18				
125	SL-12	WESTBROOK LANE	80+48		RT					17				
126	SL-13	COLONY PARK DRIVE	90+75		RT					16				
126	SL-14	TAMPLIN DRIVE	100+45		RT					16				
123	WP-1	COVENT RD	20+39		CL									1
TOTALS CARRIED TO GENERAL SUMMARY						0.14	1.32	0.18	0	349	1458	66	0	1

MIA-41-10.32

\\strand.com\projects\CIN\4300-4399\4354\004\Drawings\CAD\110253\roadway\sheets\Summaries\110253TS002.dgn Sheet 10/1/2021 4:39:10 PM Allisonw

LEGEND

AR - LANE ARROW
CH - 8" CHANNELIZING LINE
CL - CENTER LINE
CR - CROSSWALK LINE
CV - CHEVRON
DY - DOUBLE YELLOW LINE
ELW - 4" EDGE LINE WHITE
ELY - 4" EDGE LINE YELLOW
LL - 4" LANE LINE
SL - STOP LINE
WP - WORD ON PAVEMENT

BEGIN WORK STA. 441+15.03

BEGIN PROJECT STA. 442+14.95

E200 (284)

℄ W. MAIN ST.

℄ N. WESTON RD.

N 0° 03' 26" W

PI Sta. 10+49.41

N 30° 37' 33" E

℄ COVENT RD.

S 59° 22' 27" E

MATCHLINE STA 445+00

PI Sta. 445+05.74

MATCHLINE STA 445+00

S 58° 01' 14" E

PI Sta. 446+75.05

S 59° 22' 27" E

MATCHLINE STA 450+00 SEE SHEET 124

℄ S. WESTON RD.

℄ HAWORTH CT.

HORIZONTAL SCALE IN FEET

CALCULATED JTO

CHECKED JCH

PAVEMENT MARKING PLAN
STA. 440+00 TO STA. 450+00

MIA-41-10.32

123
194

S:\CIN\4300--4399\4354\004\Drawings\CAD\110253\traffic\sheets\110253TP001.dgn 10/1/2021 4:39:11 PM Allisonw

LEGEND

AR - LANE ARROW
CH - 8" CHANNELIZING LINE
CL - CENTER LINE
CR - CROSSWALK LINE
CV - CHEVRON
DY - DOUBLE YELLOW LINE
ELW - 4" EDGE LINE WHITE
ELY - 4" EDGE LINE YELLOW
LL- 4" LANE LINE
SL- STOP LINE
WP - WORD ON PAVEMENT

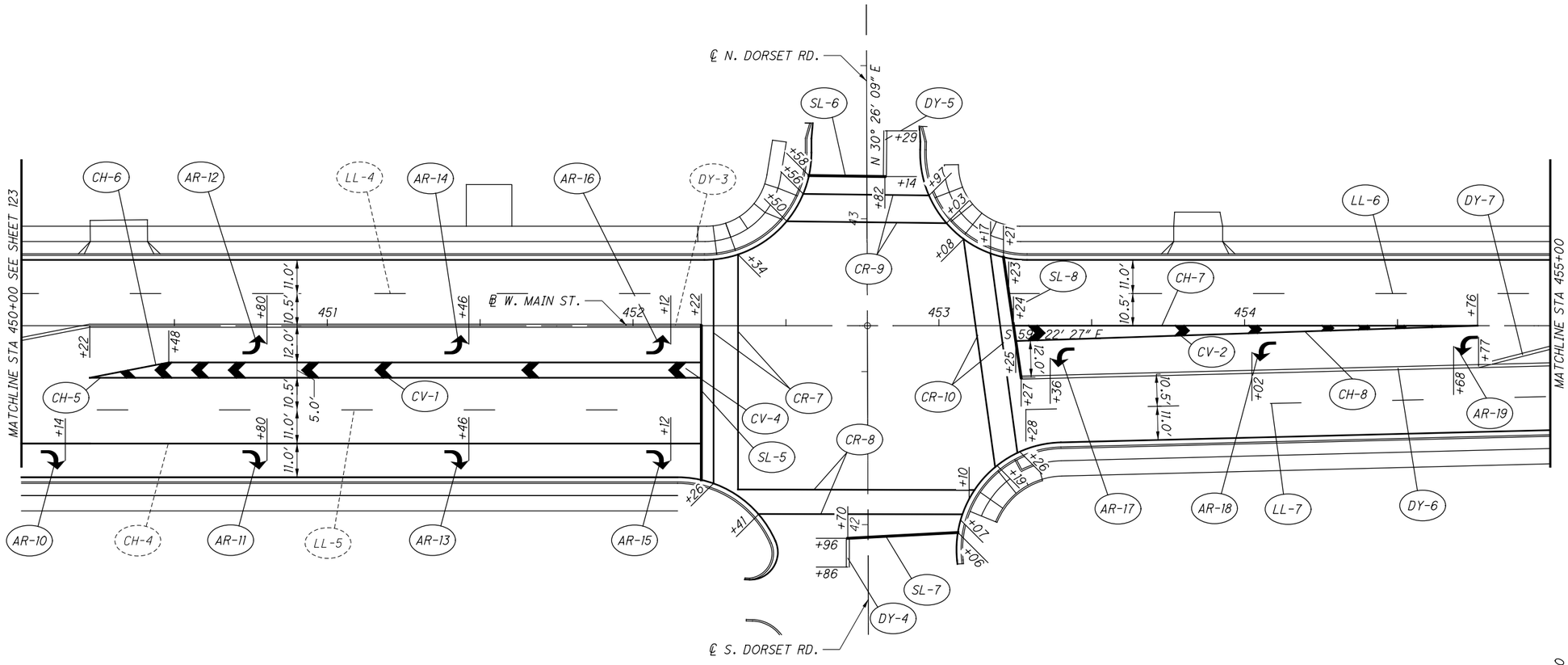

HORIZONTAL SCALE IN FEET
0 10 20 40

CALCULATED JTO
CHECKED JCH

PAVEMENT MARKING PLAN
STA. 450+00 TO STA. 460+00

MIA-41-10.32

124
194

S:\CIN\4300-4399\4354\004\Drawings\CAD\110253\traffic\sheets\110253TP002.dgn 10/1/2021 4:39:11 PM Allisonw

LEGEND

AR - LANE ARROW
CH - 8" CHANNELIZING LINE
CL - CENTER LINE
CR - CROSSWALK LINE
CV - CHEVRON
DY - DOUBLE YELLOW LINE
ELW - 4" EDGE LINE WHITE
ELY - 4" EDGE LINE YELLOW
LL - 4" LANE LINE
SL - STOP LINE
WP - WORD ON PAVEMENT

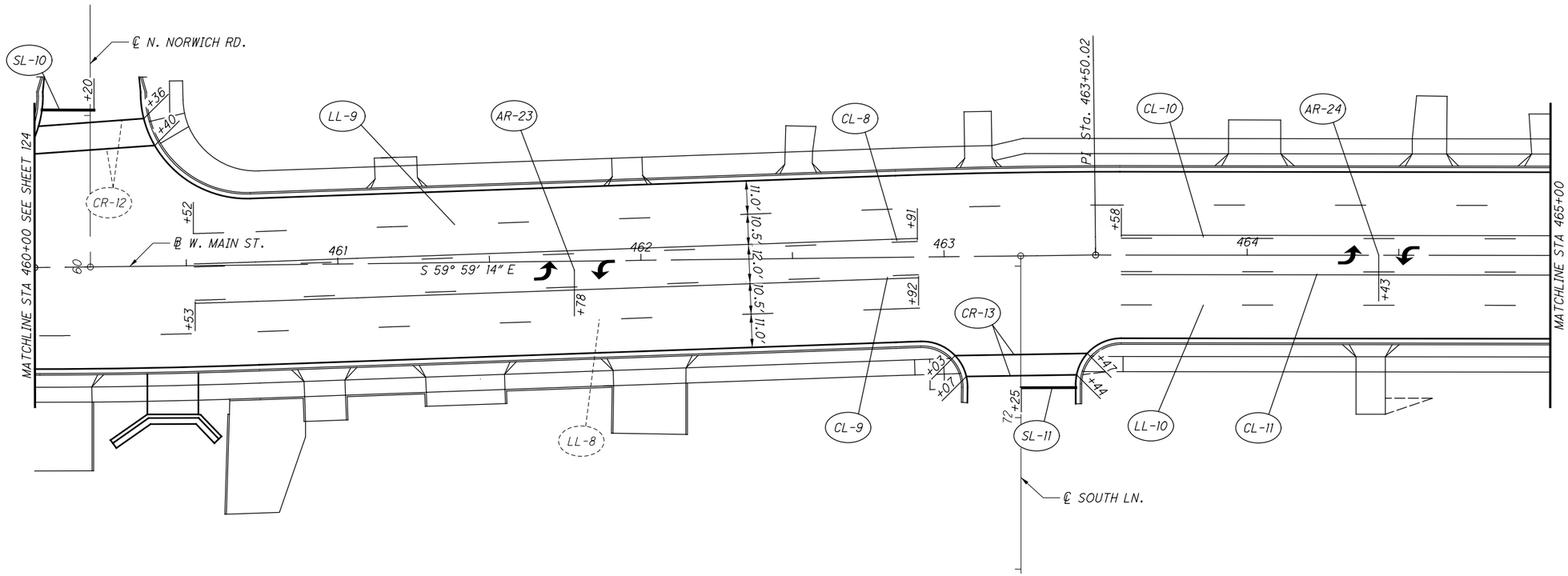

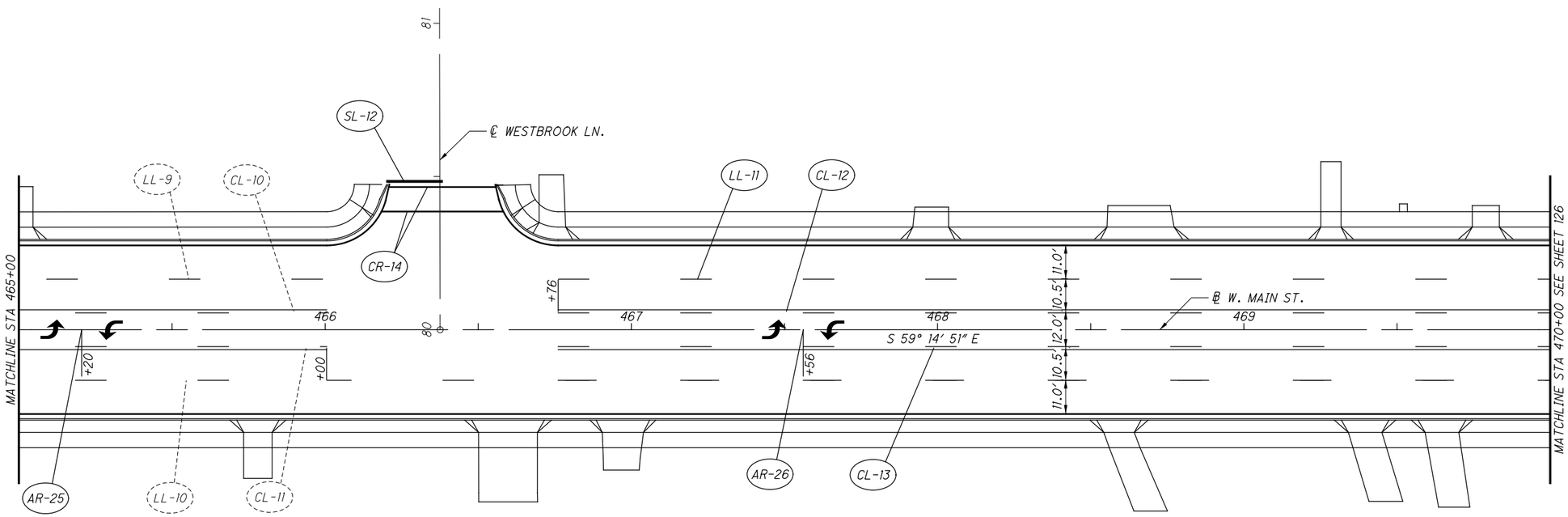

HORIZONTAL SCALE IN FEET
0 10 20 40

CALCULATED JTO
CHECKED JCH

PAVEMENT MARKING PLAN
STA. 460+00 TO STA. 470+00

MIA-41-10.32

125
194

S:\CIN\4300-4399\4354\004\Drawings\CAD\110253\traffic\sheets\110253TP003.dgn 10/1/2021 4:39:12 PM Allisonw

LEGEND

AR - LANE ARROW
CH - 8" CHANNELIZING LINE
CL - CENTER LINE
CR - CROSSWALK LINE
CV - CHEVRON
DY - DOUBLE YELLOW LINE
ELW - 4" EDGE LINE WHITE
ELY - 4" EDGE LINE YELLOW
LL - 4" LANE LINE
SL - STOP LINE
WP - WORD ON PAVEMENT

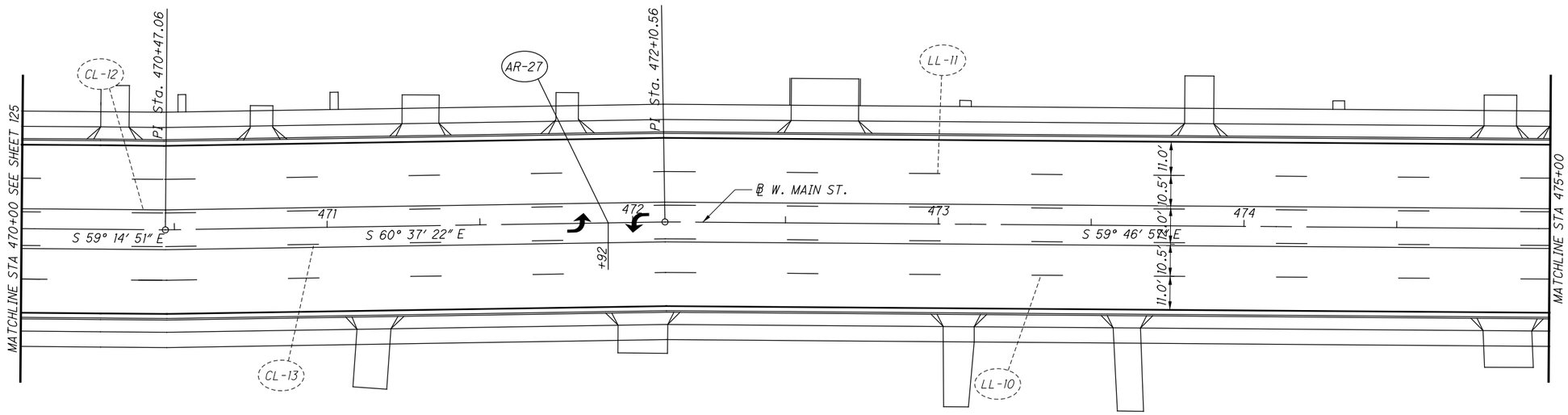

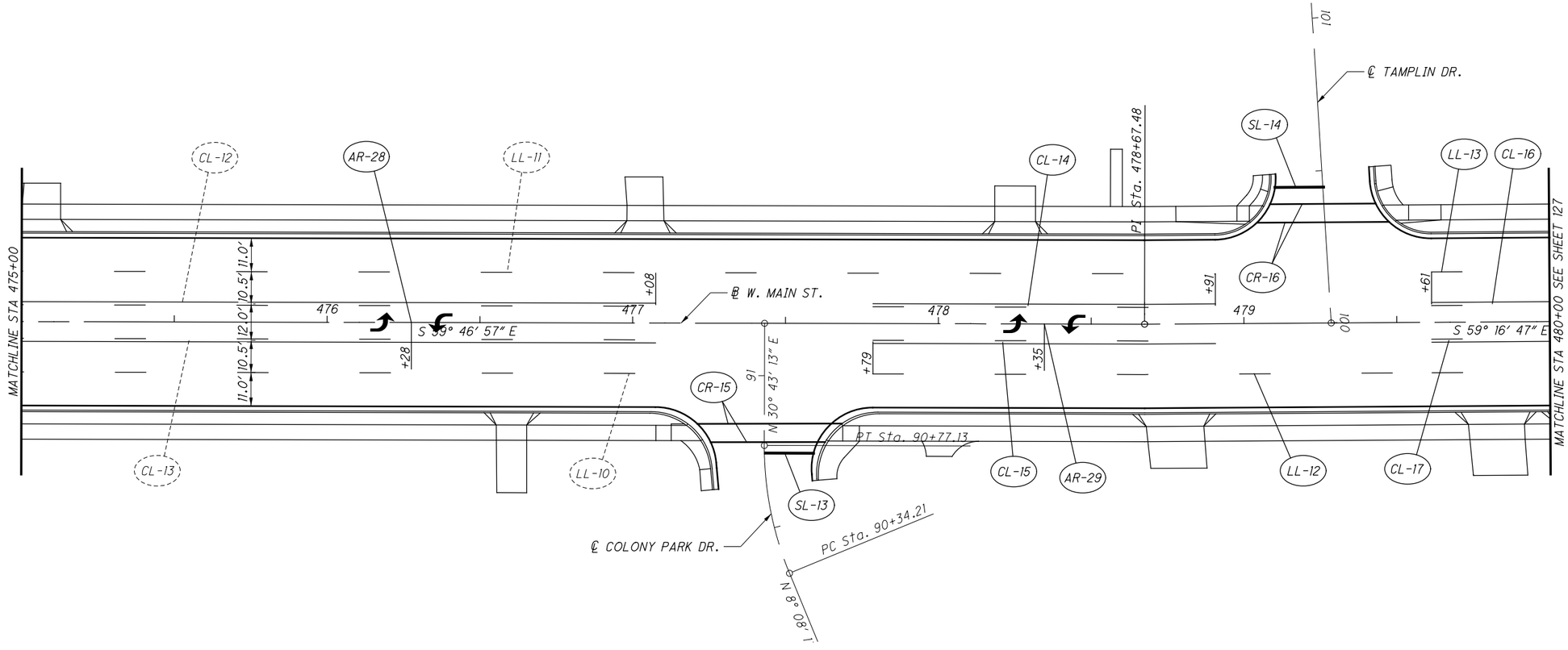

N

HORIZONTAL SCALE IN FEET
0 10 20 40

CALCULATED JTO
CHECKED JCH

PAVEMENT MARKING PLAN
STA. 470+00 TO STA. 480+00

MIA-41-10.32

126
194

S:\CIN\4300--4399\4354\004\Drawings\CAD\110253\traffic\sheets\110253TP004.dgn 10/1/2021 4:39:12 PM Allisonw

LEGEND

AR - LANE ARROW
CH - 8" CHANNELIZING LINE
CL - CENTER LINE
CR - CROSSWALK LINE
CV - CHEVRON
DY - DOUBLE YELLOW LINE
ELW - 4" EDGE LINE WHITE
ELY - 4" EDGE LINE YELLOW
LL- 4" LANE LINE
SL- STOP LINE
WP - WORD ON PAVEMENT

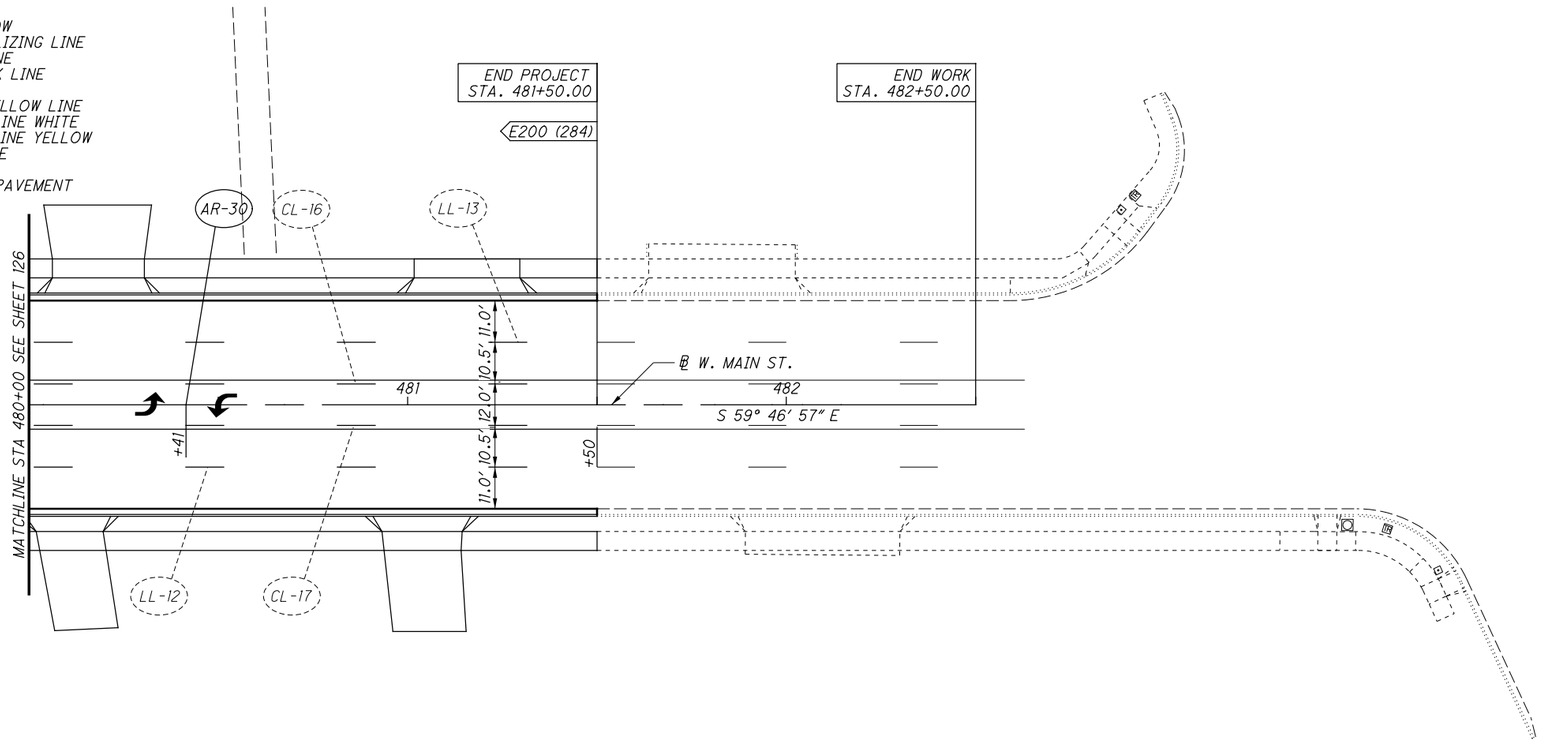

S:\CIN\4300-4399\4354\004\Drawings\CAD\110253\traffic\sheets\110253TP005.dgn 10/1/2021 4:39:13 PM Allisonw

HORIZONTAL SCALE IN FEET
0 10 20 40

CALCULATED JTO
CHECKED JCH

PAVEMENT MARKING PLAN
STA. 480+00 TO STA. 482+50

MIA-41-10.32

SHEET NO.	REFERENCE NO.	LOCATION	STATION	SIDE	CODE	SIZE WIDTH (INCHES)	SIZE HEIGHT (INCHES)	630 GROUND MOUNTED SUPPORT, NO. 3 POST	630 SIGN, FLAT SHEET	630 REMOVAL OF GROUND MOUNTED SIGN AND DISPOSAL	630 REMOVAL OF GROUND MOUNTED SIGN AND REERECTION	630 REMOVAL OF GROUND MOUNTED POST SUPPORT AND DISPOSAL
								FT	SF	EACH	EACH	EACH
129	R1	WEST MAIN STREET	442+34	RT						2		1
129	R2	WEST MAIN STREET	443+26	RT						1		1
129	R3	HAWORTH COURT	444+03	RT						1		1
129	R4	HAWORTH COURT	444+19	RT						1		1
129	R5	COVENT ROAD	20+32	RT						2		1
129	R6	WEST MAIN STREET	444+86	LT						3		1
129	R7	WEST MAIN STREET	444+86	LT						2		1
129	R8	SOUTH WESTON ROAD	447+72	RT						3		1
129	R9	WEST MAIN STREET	448+62	RT						1		1
129	R10	WEST MAIN STREET	449+83	RT						1		1
130	R11	SOUTH DORSET ROAD	452+45	LT						1		1
130	R12	WEST MAIN STREET	457+23	LT						1		1
130	R13	SOUTH NORWICH ROAD	458+69	RT						3		1
130	R14	NORTH NORWICH ROAD	459+99	LT						3		1
130	R15	WEST MAIN STREET	460+90	RT						1		1
131	R16	SOUTH LANE	463+45	RT						3		1
131	R17	WESTBROOK LANE	466+17	LT						3		1
131	R18	WESTBROOK LANE	466+64	LT						2		1
132	R19	COLONY PARK DRIVE	477+63	RT						3		1
132	R20	TAMPLIN DRIVE	479+10	LT						3		1
130	R21	WEST MAIN STREET	450+10	RT				10.0			1	
129	S1	WEST MAIN STREET	442+34	RT	M3-3-24	24	12	10.0	2.00			
					M1-5-24-2	24	24		4.00			
129	S2	WEST MAIN STREET	443+26	RT	R2-1-30	30	36	10.0	7.50			
129	S3	HAWORTH COURT	2+68	RT	R3-2-24	24	24	9.0	4.00			
129	S4	HAWORTH COURT	2+51	RT	R1-1-30	30	30	9.5	6.25			
129	S5	WEST MAIN STREET	444+86	LT	M3-1-24	34	12	13.0	2.83			
					M1-1-24-2	24	24		4.00			
					M5-H6A-24	24	36		6.00			
129	S6	WEST MAIN STREET	444+86	LT	M3-3-24	24	12	10.0	2.00			
					M1-1-24-2	24	24		4.00			
129	S7	COVENT ROAD	20+33	RT	R5-2A-24	24	24	9.0	4.00			
129	S8	SOUTH WESTON ROAD	447+78	RT	D3-1-49	49	8	10.8	2.72			
					D3-1-59	59	8		3.28			
					R1-1-30	30	30		6.25			
129	S9	WEST MAIN STREET	448+69	RT	R3-5R-30	30	36	10.0	7.50			
129	S10	WEST MAIN STREET	449+84	RT	R3-H8-CG-48	48	30	9.5	10.00			
130	S11	SOUTH DORSET ROAD	452+41	LT	R5-H2B-24	24	24	9.0	4.00			
130	S12	WEST MAIN STREET	457+32	RT	R3-H8CG-48	48	30	9.5	10.00			
130	S13	SOUTH NORWICH ROAD	458+63	LT	D3-1-53	53	8	10.8	2.94			
					D3-1-49	49	8		2.72			
					R1-1-30	30	30		6.25			
130	S14	NORTH NORWICH ROAD	459+95	LT	D3-1-53	53	8	10.8	2.94			
					D3-1-49	49	8		2.72			
					R1-1-30	30	30		6.25			
131	S15	WEST MAIN STREET	460+89	RT	R1-1-30	30	30	9.5	6.25			
131	S16	SOUTH LANE	463+52	RT	D3-1-49	49	8	10.8	2.72			
					D3-1-43	43	8		2.39			
					R1-1-30	30	30		6.25			
131	S17	WESTBROOK LANE	466+07	LT	D3-1-64	64	8	10.8	3.56			
					D3-1-49	49	8		2.72			
					R1-1-30	30	30		6.25			
131	S18	WESTBROOK LANE	466+65	LT	R5-2-24	24	24	11.0	4.00			
					R5-2A-24	24	24		4.00			
132	S19	COLONY PARK DRIVE	477+68	RT	D3-1-49	49	8	10.8	2.72			
					D3-1-74	74	8		4.11			
					R1-1-30	30	30		6.25			
132	S20	TAMPLIN DRIVE	478+98	LT	D3-1-49	49	8	10.8	2.72			
					D3-1-54	54	8		3.00			
					R1-1-30	30	30		6.25			
TOTALS CARRIED TO GENERAL SUMMARY								215	177	40	1	20

CALCULATED ATW
CHECKED JCH

SIGNING SUBSUMMARY

MIA-41-10.32

\\strand.com\projects\CIN\4300--4399\4354\004\Drawings\CAD\110253\roadway\sheets\Summaries\110253TS003.dgn Sheet 10/1/2021 4:39:13 PM Allisonw

SIGNING PLAN
STA. 440+00 TO STA. 450+00

MIA-41-10.32

CALCULATED JTO
CHECKED JCH

HORIZONTAL SCALE IN FEET
0 10 20 40

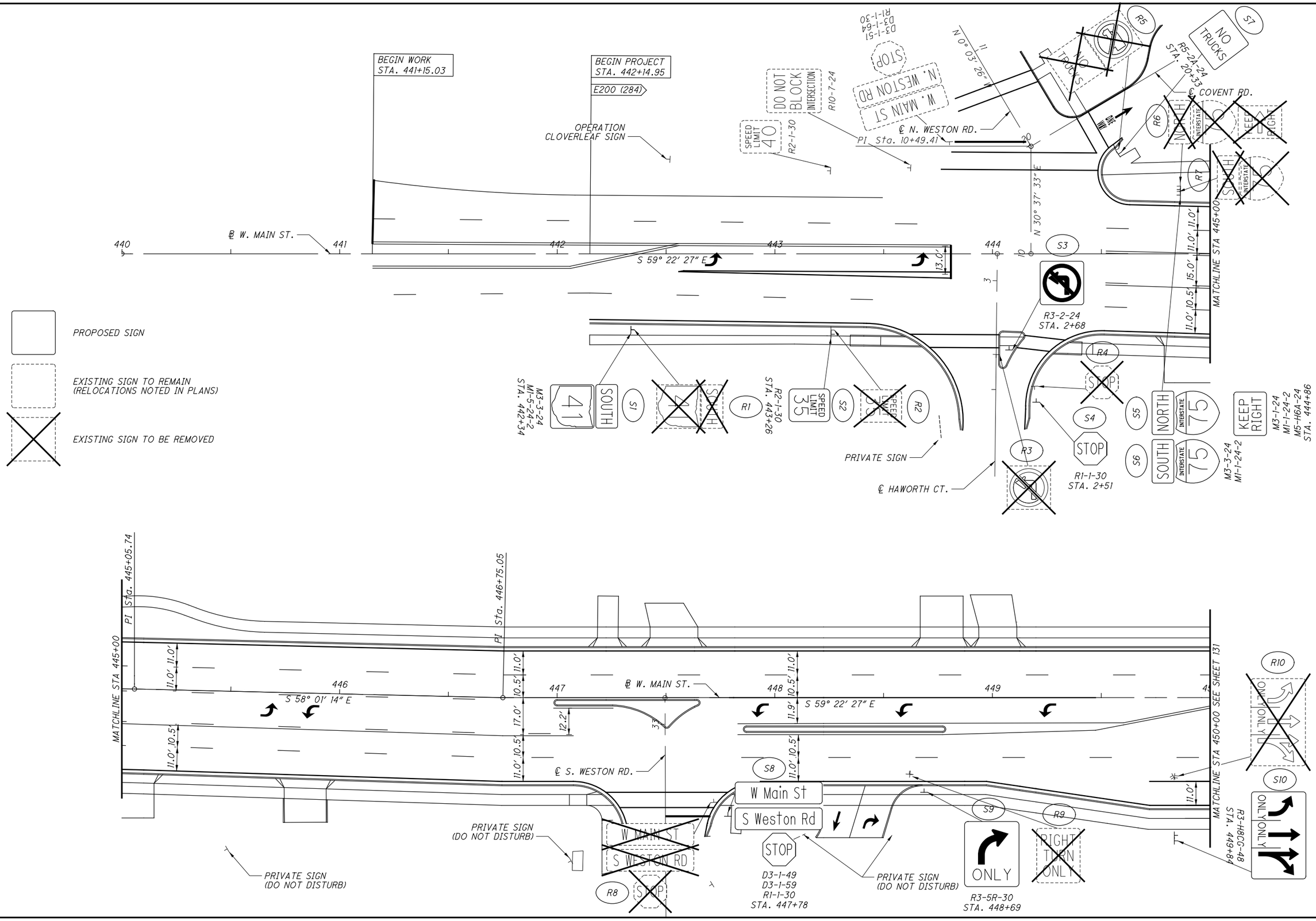

S:\CIN\4300-4399\4354\004\Drawings\CAD\110253\traffic\sheets\110253TP006.dgn Sheet View 10/1/2021 4:39:14 PM Allisonw

SIGNING PLAN
STA. 450+00 TO STA. 460+00

MIA-41-10.32

130
194

CALCULATED JTO
CHECKED JCH

HORIZONTAL SCALE IN FEET
0 10 20 40

PROPOSED SIGN

EXISTING SIGN TO REMAIN
(RELOCATIONS NOTED IN PLANS)

EXISTING SIGN TO BE REMOVED

JCT
INTERSTATE 75
M2-1-21
M1-1-24-2

℄ N. DORSET RD.
N 30° 26' 09" E

PRIVATE SIGN
(DO NOT DISTURB)

NO TRUCKS
R5-2-24
R5-2A-24

MATCHLINE STA 450+00 SEE SHEET 130

℄ W. MAIN ST.

451 452 453 454

S 59° 22' 27" E

11.0' 10.5' 12.0' 10.5' 11.0'
5.0'

NO THROUGH TRUCKS PROHIBITED
R11

MATCHLINE STA 455+00

PRIVATE SIGN
(REMOVE AND RELOCATE)
R21

NO PARKING
R8-3a-18
(DO NOT DISTURB)

PRIVATE SIGN
(DO NOT DISTURB)

R5-H2B-24
STA. 452+41

NO THROUGH TRUCKS
S11

℄ S. DORSET RD.

PRIVATE SIGN
(DO NOT DISTURB)

R12 ONLY

S12 ONLY

R3-H8CG-48
STA. 457+32

PRIVATE SIGN
(DO NOT DISTURB)

PRIVATE SIGN
(DO NOT DISTURB)

MATCHLINE STA 455+00

456 457 458 459

℄ W. MAIN ST.

S 59° 22' 27" E

11.0' 10.5' 12.0' 10.5' 11.0'

PT STA. 460+00.00

NORWICH RD
W MAIN ST
STOP
R14

D3-1-53
D3-1-49
R1-1-30
STA. 459+95

Norwich Rd
W Main St
S14

MATCHLINE STA 460+00 SEE SHEET 132

PRIVATE SIGN
(DO NOT DISTURB)

℄ S. NORWICH RD.

Norwich Rd
W Main St
S13

STOP
D3-1-53
D3-1-49
R1-1-30
STA. 458+63

NORWICH RD
W MAIN ST
STOP
R13

S:\CIN\4300--4399\4354\004\Drawings\CAD\110253\traffic\sheets\110253TP007.dgn Sheet View 10/1/2021 4:39:15 PM Allisonw

℄ N. NORWICH RD.

MATCHLINE STA 460+00 SEE SHEET 131

℄ W. MAIN ST.

461 462 463 464

S 59° 59′ 14″ E

PI Sta. 463+50.02

11.0′ 10.5′ 12.0′ 10.5′ 11.0′

MATCHLINE STA 465+00

R15 STOP — S15 STOP

R1-1-30
STA. 460+89

72

℄ SOUTH LN.

S16 — W Main St / South Ln — STOP

D3-1-49
D3-1-43
R1-1-30
STA. 463+52

W MAIN ST SOUTH LN — STOP — R16

PROPOSED SIGN

EXISTING SIGN TO REMAIN
(RELOCATIONS NOTED IN PLANS)

EXISTING SIGN TO BE REMOVED

D3-1-64
D3-1-49
R1-1-30
STA. 466+07

STOP — W Main St / Westbrook Ln — S17

WESTBROOK LN — STOP — R17

18

91+

℄ WESTBROOK LN.

R5-2-24
R5-2A-24
STA. 466+65

NO TRUCKS — R18

NO TRUCKS — S18

MATCHLINE STA 465+00

466 467 468 469

80

S 59° 14′ 51″ E

11.0′ 10.5′ 12.0′ 10.5′ 11.0′

℄ W. MAIN ST.

MATCHLINE STA 470+00 SEE SHEET 133

HORIZONTAL SCALE IN FEET
0 10 20 40

CALCULATED JTO
CHECKED JCH

SIGNING PLAN
STA. 460+00 TO STA. 470+00

MIA-41-10.32

131
194

S:\CIN\4300--4399\4354\004\Drawings\CAD\110253\traffic\sheets\110253TP008.dgn Sheet 10/1/2021 4:39:15 PM Allisonw

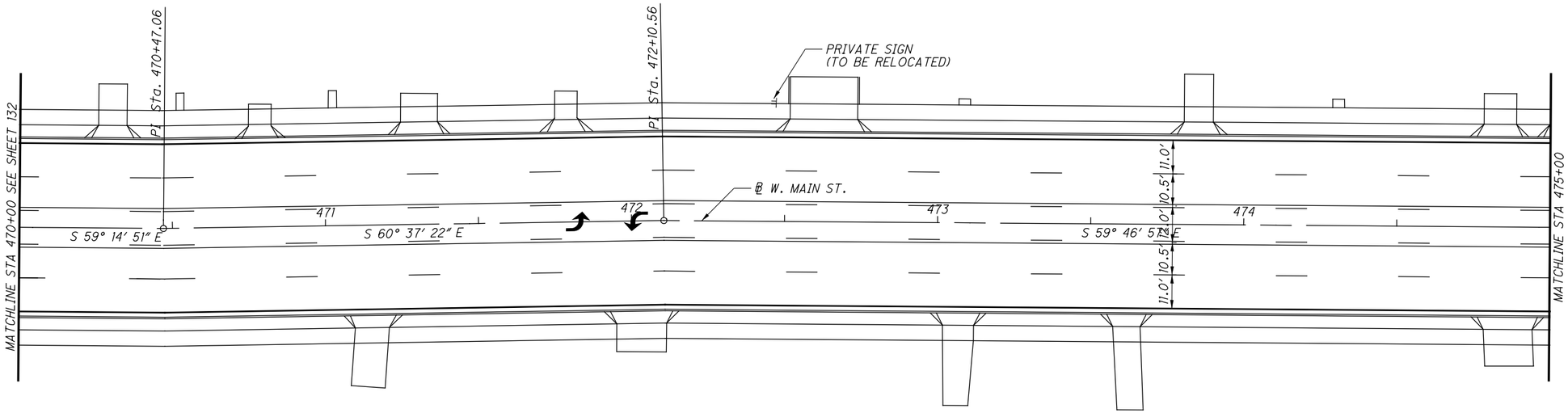

PROPOSED SIGN

EXISTING SIGN TO REMAIN
(RELOCATIONS NOTED IN PLANS)

EXISTING SIGN TO BE REMOVED

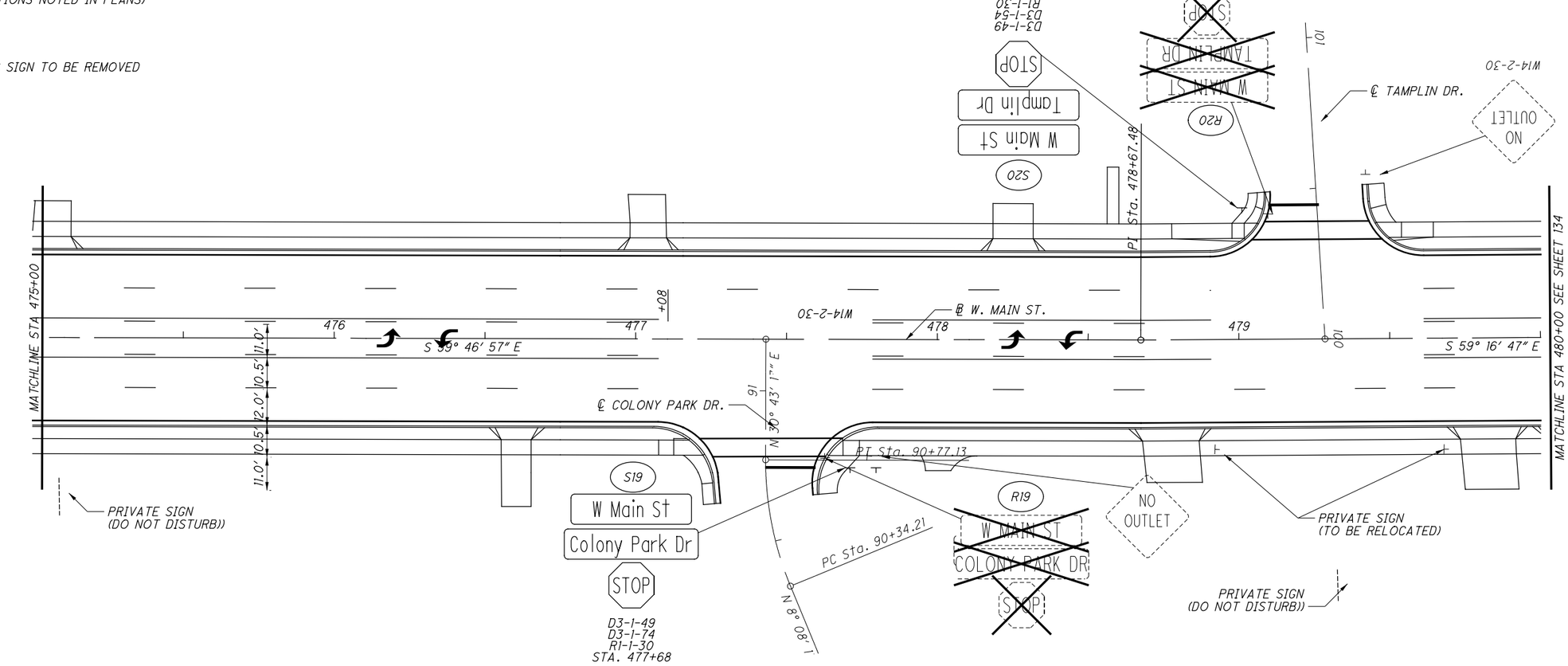

HORIZONTAL SCALE IN FEET
0 10 20 40

CALCULATED JTO
CHECKED JCH

SIGNING PLAN
STA. 470+00 TO STA. 480+00

MIA-41-10.32

132
194

S:\CIN\4300-4399\4354\004\Drawings\CAD\110253\traffic\sheets\110253TP009.dgn Sheet 10/1/2021 4:39:16 PM Allisonw

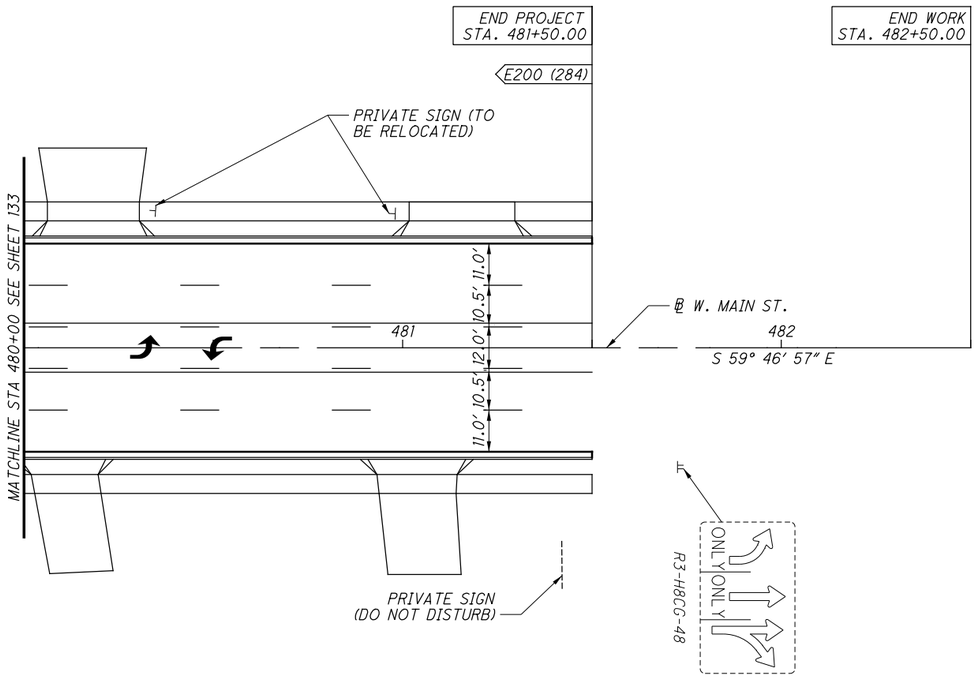

PROPOSED SIGN

EXISTING SIGN TO REMAIN
(RELOCATIONS NOTED IN PLANS)

EXISTING SIGN TO BE REMOVED

HORIZONTAL SCALE IN FEET
0 10 20 40

CALCULATED JTO
CHECKED JCH

SIGNING PLAN
STA. 480+00 TO STA. 482+50

MIA-41-10.32

133
194

S:\CIN\4300--4399\4354\004\Drawings\CAD\110253\traffic\sheets\110253TP010.dgn Sheet 10/1/2021 4:39:16 PM Allisonw

WORK LIMITS

THE WORK LIMITS SHOWN ON THESE PLANS ARE FOR PHYSICAL CONSTRUCTION ONLY. PROVIDE THE INSTALLATION AND OPERATION OF ALL WORK ZONE TRAFFIC CONTROL AND WORK ZONE TRAFFIC CONTROL DEVICES REQUIRED BY THESE PLANS WHETHER INSIDE OR OUTSIDE THESE WORK LIMITS.

POWER SUPPLY FOR TRAFFIC SIGNALS

ELECTRIC POWER SHALL BE OBTAINED FROM DAYTON POWER AND LIGHT (DP&L INC.), AT THE LOCATION INDICATED ON THE PLANS. POWER SUPPLIED SHALL BE 120 VOLTS.

ITEM 614 MAINTENANCE OF TRAFFIC SIGNAL/FLASHER INSTALLATION

THE CONTRACTOR SHALL BE RESPONSIBLE FOR MAINTAINING TRAFFIC SIGNAL/FLASHER INSTALLATIONS WITHIN THE PROJECT UNDER THE FOLLOWING CONDITIONS:

1. EXISTING SIGNAL/FLASHER INSTALLATIONS WHICH THE PLANS REQUIRE THE CONTRACTOR TO ADJUST, MODIFY, ADD ONTO OR REMOVE, OR WHICH THE CONTRACTOR ACTUALLY ADJUSTS, MODIFIES OR OTHERWISE DISTURBS. THE CONTRACTOR SHALL BE RESPONSIBLE FOR THE ENTIRE INSTALLATION (AT AN INTERSECTION) FROM THE TIME HIS OPERATIONS FIRST DISTURB THE INSTALLATION UNTIL THE INSTALLATION HAS BEEN SUBSEQUENTLY REMOVED OR MODIFIED AND THE WORK ACCEPTED.

2. NEW OR REUSED SIGNAL/FLASHER INSTALLATIONS OR DEVICES, INSTALLED BY THE CONTRACTOR. THE CONTRACTOR SHALL BE RESPONSIBLE FOR MAINTENANCE OF THESE FROM THE TIME OF INSTALLATION UNTIL THE WORK IS ACCEPTED.

THE CONTRACTOR SHALL CORRECT AS QUICKLY AS POSSIBLE ALL OUTAGES OR MALFUNCTIONS. HE SHALL PROVIDE THE MAINTAINING AGENCY AND THE ENGINEER SUCH ADDRESSES AND PHONE NUMBERS WHERE HIS MAINTENANCE FORCES CAN BE CONTACTED. THE CONTRACTOR SHALL PROVIDE ONE OR MORE PERSONS TO RECEIVE ALL CALLS AND DISPATCH THE NECESSARY MAINTENANCE FORCES TO CORRECT OUTAGES. SUCH A PERSON OR PERSONS MAY BE USED TO PERFORM OTHER DUTIES AS LONG AS PROMPT ATTENTION IS GIVEN TO THESE CALLS AND A PERSON IS READILY AVAILABLE CONTINUOUSLY 24 HOURS A DAY, 7 DAYS A WEEK. ALL LAMP OUTAGES, CABLE OUTAGES, ELECTRICAL FAILURES, EQUIPMENT MALFUNCTIONS AND MISALIGNED SIGNAL HEADS SHALL BE CORRECTED TO THE SATISFACTION OF THE ENGINEER WITH THE SIGNAL BACK TO SERVICE WITHIN FOUR HOURS AFTER THE CONTRACTOR HAS BEEN NOTIFIED OF THE OUTAGE.

IN THE EVENT NEW SIGNALS ARE DAMAGED PRIOR TO ACCEPTANCE, ALL DAMAGED EQUIPMENT EXCEPT POLES AND CONTROL EQUIPMENT SHALL BE REPLACED BY THE CONTRACTOR TO THE SATISFACTION OF THE ENGINEER WITH THE SIGNAL BACK IN SERVICE WITHIN 8 HOURS AFTER THE CONTRACTOR'S NOTIFICATION OF THE OUTAGE. THE CONTRACTOR SHALL ARRANGE FOR FULL TRAFFIC CONTROL UNTIL THE SIGNAL IS BACK IN OPERATION.

IF POLES AND/OR CONTROL EQUIPMENT ARE DAMAGED AND MUST BE REPLACED, THE CONTRACTOR SHALL MAKE TEMPORARY REPAIRS AS NECESSARY TO BRING THE SIGNAL BACK INTO FULL OPERATION WITHIN THE ALLOWED 8-HOUR PERIOD, AND SHALL MAKE PERMANENT REPAIRS OR REPLACEMENT AS SOON THEREAFTER AS POSSIBLE.

NONE OF THE ABOVE SHALL BE CONSTRUED AS COLLECTIVE OR CONSECUTIVE OUTAGE TIME PERIODS AT ANY ONE LOCATION. THAT IS, WHERE MORE THAN ONE OUTAGE OCCURS AT ANY ONE LOCATION THEN THE ALLOTTED TIME LIMIT SHALL BE FOR THE WORST SINGLE OUTAGE.

WHERE OUTAGES ARE THE DIRECT RESULT OF A VEHICLE ACCIDENT, THE RESPONSE OF THE CONTRACTOR SHALL BE AS OUTLINED ABOVE. THE CONTRACTOR SHALL BE RESPONSIBLE FOR COLLECTION OF ANY COMPENSATION FOR THIS WORK FROM THOSE PARTIES RESPONSIBLE FOR THE DAMAGE.

WHERE THE CONTRACTOR HAS FAILED TO, OR CANNOT RESPOND TO, AN OUTAGE OR SIGNAL EQUIPMENT MALFUNCTION, AT THESE LOCATIONS WITHIN HIS RESPONSIBILITY, WITHIN PERIODS AS SPECIFIED ABOVE, THE ENGINEER MAY INVOKE THE PROVISIONS OF SECTION 105.15 AND ANY SUBSEQUENT BILLINGS TO THE STATE OR THE CITY OF TROY FOR POLICE SERVICES AND MAINTENANCE SERVICES BY CITY FORCES SHALL BE DEDUCTED FROM MONIES DUE OR TO BECOME DUE THE CONTRACTOR IN ACCORDANCE WITH PROVISIONS OF SECTION 105.15.

THE CONTRACTOR SHALL PROVIDE THE MAINTENANCE SERVICE ENTIRELY WITH HIS FORCES OR HE MAY CHOOSE TO ENTER INTO A COOPERATIVE UNDERSTANDING WITH THE LOCAL MAINTAINING AGENCY TO PROVIDE THE MAINTENANCE. THE CONTRACTOR SHALL INFORM THE ENGINEER, IN WRITING, OF THE MAINTENANCE METHOD SELECTED.

THE CONTRACTOR SHALL BE RESPONSIBLE FOR ANY DAMAGE TO ANY TRAFFIC SIGNAL COMPONENTS REQUIRED TO BE HANDLED DURING THE RELOCATION OF POLES AND REVISIONS TO THE SIGNAL SYSTEM.

WHEN A TRAFFIC SIGNAL MUST BE TAKEN OUT OF SERVICE BY THE CONTRACTOR, DUE TO CONSTRUCTION PROCEDURES, THIS OUTAGE SHALL NOT EXCEED 4 HOURS AND SHALL NOT INCLUDE THE HOURS OF 7 AM TO 9 AM OR 4 PM to 6 PM. ANY SIGNALIZED INTERSECTION, WHERE THE SIGNAL IS OUT OF SERVICE DUE TO CONSTRUCTION PROCEDURES, OR DUE TO AN OUTAGE OR MALFUNCTION OF EQUIPMENT AS DESCRIBED ABOVE, SHALL BE PROTECTED, BY THE CONTRACTOR, BY THE INSTALLATION OF TEMPORARY "STOP" SIGNS.

ANY VEHICULAR TRAFFIC SIGNAL HEAD, EITHER NEW OR EXISTING WHICH WILL BE OUT OF OPERATION SHALL BE COVERED IN THE MANNER DESCRIBED IN 632.25.

THE CONTRACTOR SHALL MAINTAIN COMPLETE RECORDS OF MALFUNCTIONS INCLUDING:

1. TIME OF NOTIFICATION OF MALFUNCTION;
2. TIME OF WORK CREWS ARRIVAL TO CORRECT THE MALFUNCTION;
3. ACTIONS TAKEN TO CORRECT THE MALFUNCTION, INCLUDING A LIST OF PARTS REPAIRED OR REPLACED;
4. A DIAGNOSIS OF REASON FOR THE MALFUNCTION AND PROBABILITY OF RE-OCCURRENCE;
5. TIME OF COMPLETION OF THE REPAIR AND SYSTEM RESTORED TO FULL SERVICE.

A COPY OF THESE RECORDS SHALL BE PROVIDED TO THE ENGINEER WITHIN THREE (3) WORKING DAYS FOLLOWING COMPLETION OF EACH REPAIR.

COORDINATION TIMING SHALL BE MAINTAINED UNTIL THE SIGNAL IS TAKEN OUT OF SERVICE.

ALL COSTS RESULTING FROM THE ABOVE REQUIREMENTS SHALL BE CONSIDERED TO BE INCLUDED IN THE LUMP SUM PRICE BID FOR ITEM 614, MAINTAINING TRAFFIC.

SIGNAL ACTIVATION

PRIOR TO ACTIVATING THE NEW TRAFFIC SIGNAL TO STOP AND GO MODE AND/OR REMOVING THE EXISTING TRAFFIC SIGNAL FROM SERVICE, ALL ITEMS IN THE PROPOSED SIGNAL PLAN SHALL BE FULLY COMPLETED, (I.E., VEHICLE DETECTION, PEDESTRIAN SIGNAL HEADS, ETC). IF THERE ARE CONSTRUCTABILITY ISSUES (I.E., ROADWAY WIDENING, ETC.) THAT PREVENT THE SIGNAL FROM BEING COMPLETED PRIOR TO ACTIVATION, IT SHALL BE BROUGHT TO THE ATTENTION OF THE PROJECT ENGINEER FOR THE CITY. THE PROJECT ENGINEER WILL THEN REVIEW, APPROVE OR REJECT PROPOSALS TO ACTIVATE THE TRAFFIC SIGNAL PRIOR TO COMPLETION.

THE CONTRACTOR SHALL NOTIFY THE PROJECT ENGINEER AT LEAST 10 WORKING DAYS PRIOR TO SCHEDULING THE FINAL INSPECTION OF THE SIGNAL INSTALLATION. FINAL INSPECTION IS NOT CONSIDERED COMPLETE UNTIL DESIGNATED TRAFFIC PERSONNEL INSPECT THE TRAFFIC SIGNAL AND ISSUE WRITTEN APPROVAL. IF ISSUES ARE FOUND DURING THE FINAL INSPECTION THAT EFFECT THE SAFETY OF THE TRAVELING PUBLIC AND/OR THE EFFICIENCY OF THE INTERSECTION, THE SIGNAL SHALL NOT BE ACTIVATED ON THE PROPOSED DATE. ANY PUNCH LIST ITEMS THAT ARE FOUND SHALL BE CORRECTED AND REINSPECTED BY THE ENGINEER PRIOR TO FINAL ACCEPTANCE. CITY FORCES SHALL ONLY ASSUME DAY TO DAY MAINTENANCE OF THE TRAFFIC SIGNAL AFTER FINAL WRITTEN ACCEPTANCE HAS BEEN ISSUED.

DETECTION MAINTENANCE

IF VEHICLE DETECTION BECOMES UNEXPECTEDLY DISABLED, REQUIRES MODIFICATION, OR IS SCHEDULED TO BE TEMPORARILY REMOVED DURING THE CONSTRUCTION PROJECT, THE CONTRACTOR SHALL IMMEDIATELY NOTIFY THE PROJECT ENGINEER AND CITY ENGINEER.

IF THE LOSS OF VEHICLE DETECTION IS KNOWN PRIOR TO THE START OF CONSTRUCTION, IT SHALL BE DISCUSSED AT THE PRECONSTRUCTION MEETING. AT SUCH TIME, THE CITY ENGINEER SHALL ADVISE THE PROJECT ENGINEER AND CONTRACTOR ON THE APPROPRIATE ACTION TO RECTIFY ANY LOSS OF VEHICLE DETECTION. THIS MAY INCLUDE PLACING THE TRAFFIC SIGNAL ON MINIMUM OR MAXIMUM RECALL, MODIFYING THE MINIMUM GREEN TIMES, AND REMOVING THE MALFUNCTIONING DETECTION FROM SERVICE. WHERE NONINTRUSIVE DETECTION (I.E. VIDEO, RADAR) ALREADY EXISTS, THE CONTRACTOR SHALL INSURE THAT DETECTION IS OPERATING AND MAINTAINED BY RECONFIGURING THE DETECTION UNITS ACCORDINGLY DURING ALL CONSTRUCTION PHASES. THIS IS TO AVOID THE SIGNAL FROM MAXING OUT THE EFFECTED SIGNAL PHASE AND CREATING UNNECESSARY DELAYS.

LOCATIONS WHERE NON-INTRUSIVE DETECTION IS PROPOSED AND THE EXISTING VEHICLE DETECTION IS TO BE ABANDONED, THE NON-INTRUSIVE VEHICLE DETECTION SHALL BE INSTALLED, CONFIGURED AND MADE FULLY FUNCTIONAL PRIOR TO THE EXISTING DETECTION BEING DISABLED. THE CONTRACTOR SHALL CONTINUE TO MAINTAIN AND MODIFY THE DETECTION UNTIL FINAL ACCEPTANCE OF THE TRAFFIC SIGNAL. THIS IS TO ENSURE VEHICLE DETECTION REMAINS FULLY FUNCTIONAL THROUGHOUT CONSTRUCTION.

WORK INSPECTION

THE CONTRACTOR SHALL PROVIDE THE PROJECT ENGINEER WITH 72 HOUR NOTICE OF ANY SIGNAL WORK TO BE PERFORMED AT THE INTERSECTION SITE(S) SO THAT INSPECTION SERVICES CAN BE SUPPLIED.

ITEM 625 TRENCH

IT IS INTENDED THAT THE CONTRACTOR SHALL INSTALL CONDUIT PRIOR TO PLACEMENT OF THE SIDEWALK. THE COST OF COORDINATION FOR TRENCHING AND CONDUIT INSTALLATION PRIOR TO SIDEWALK PLACEMENT SHALL BE CONSIDERED INCIDENTAL TO THE COST BID FOR THIS ITEM. IN THE EVENT THE CONDUIT IS PLACED AFTER THE NEW SIDEWALK IS INSTALLED, THE CONTRACTOR, AT HIS EXPENSE SHALL REPLACE THE ENTIRE SLAB(S) AFFECTED BY THE TRENCHING, AND MATCH THE SURFACE TREATMENT AND EDGING OF THE ADJACENT WALK. IN LIEU OF REPLACING THE SIDEWALK SLABS, THE CONTRACTOR MAY ELECT TO JACK OR DRILL THE CONDUIT UNDER THE SIDEWALK. NO ADDITIONAL COMPENSATION SHALL BE PROVIDED FOR SELECTION OF EITHER METHOD.

ITEM 630 SIGN HANGER ASSEMBLY, MAST ARM, AS PER PLAN

IN ADDITION TO ITEM 630, SIGNS SHALL BE RIGIDLY ATTACHED TO THE MAST ARM INSTEAD OF BEING SUSPENDED FROM THE MAST ARM. THE SIGN SUPPORT ASSEMBLY SHALL COMPLY WITH ITEM 630.06 AND BE FULLY ADJUSTABLE TO ENABLE ORIENTATION OF SIGN FACES PERPENDICULAR TO THE APPROACH LANES. THIS ITEM SHALL INCLUDE ALL NECESSARY HARDWARE FASTENERS THAT ARE CORROSION RESISTANT, AND ACCESSORIES.

HARDWARE AND FASTENERS THAT ARE NOT STAINLESS STEEL SHALL BE PAINTED FEDERAL BLACK AND SHALL MEET ODOT SUPPLEMENTAL SPECIFICATION 916

PAYMENT SHALL BE MADE AT THE CONTRACT UNIT PRICE BID PER EACH OF ITEM 630 SIGN HANGER ASSEMBLY, MAST ARM, AS PER PLAN IN PLACE.

ITEM 632 SIGNAL SUPPORT, TYPE TC-81-22, (BY DESIGN), AS PER PLAN

SIGNAL SUPPORTS SHALL BE GALVANIZED PER 711.02 AND POWDER COATED FEDERAL BLACK. ALL POLES, PEDESTALS, AND MAST ARMS SHALL BE POWDER COATED TO MATCH THE EXISTING SIGNAL SUPPORTS WITHIN THE DOWNTOWN AREA OF TROY AND SHALL MEET ODOT SUPPLEMENTAL SPECIFICATION 916.

SIGNAL SUPPORTS HAVE BEEN DESIGNED FOLLOWING ODOT SPECIFICATIONS. THE CONTRACTOR SHALL OBTAIN CALCULATIONS AND SHOP DRAWINGS FROM THE SIGNAL SUPPORT MANUFACTURER VERIFYING THE ABILITY OF THE MAST ARM TO SUPPORT THE DESIGNED LOADS. THESE CALCULATIONS AND SHOP DRAWINGS SHALL HAVE AN OHIO PE STAMP AND BE PROVIDED TO THE ENGINEER PRIOR TO ORDERING. NO SIGNAL SUPPORTS SHALL BE ORDERED PRIOR TO SUBMITTING THE SHOP DRAWING INFORMATION.

THE POLE HEIGHT IS TO BE AS DETAILED IN THE SIGNALDETAIL SHEETS FOR EACH INTERSECTION.

PAYMENT WILL BE MADE AT THE CONTRACT UNIT PRICE BID PER EACH OF ITEM 632 SIGNAL SUPPORT, TYPE TC-81-22, (BY DESIGN), AS PER PLAN.

ITEM 632 COMBINATION SIGNAL SUPPORT, TYPE TC-81.22, DESIGN 4, AS PER PLAN

THIS ITEM OF WORK SHALL MEET ALL THE REQUIREMENTS OF ITEM 632 SIGNAL SUPPORT, TYPE TC-81.22, (BY DESIGN), AS PER PLAN EXCEPT THAT THE SUPPORT IS A COMBINATION SIGNAL SUPPORT WITH ITEM 10' BRACKET ARM ATTACHED ON THE TOP OF THE POLE AS SHOWN ON THE PLANS.

PAYMENT WILL BE MADE AT THE CONTRACT UNIT PRICE BID PER EACH OF ITEM 632 COMBINATION SIGNAL SUPPORT, TYPE TC-81.22, DESIGN 4, AS PER PLAN.

ITEM 632 PEDESTAL, 10', TRANSFORMER BASE, AS PER PLAN

PEDESTALS SHALL BE GALVANIZED PER 711.02 AND POWDER COATED FEDERAL BLACK AND SHALL MEET ODOT SUPPLEMENTAL SPECIFICATION 916. THEY SHALL BE IDENTICAL IN COLOR TO THE SIGNAL SUPPORTS ON THIS PROJECT.

PAYMENT WILL BE MADE AT THE CONTRACT UNIT PRICE BID PER EACH OF ITEM 632 PEDESTAL, 10', TRANSFORMER BASE, AS PER PLAN.

SIGNAL SUPPORT AND PEDESTAL FOUNDATIONS

ELEVATIONS SHOWN IN THE PLANS FOR SIGNAL SUPPORT AND PEDESTAL FOUNDATIONS ARE FOR COMPUTATIONAL PURPOSES ONLY. THE ACTUAL ELEVATION OF THE FOUNDATION SHALL BE IN ACCORDANCE WITH TRAFFIC SCD TC-21.21 PROVIDED THE EXISTING SLOPE IS LESS THAN 6:1 UNLESS THE FOLLOWING CONDITIONS ARE PRESENT:

1. THE TOP OF FOUNDATION SHALL BE FLUSH WITH THE SIDEWALK ELEVATION IF LOCATED ADJACENT TO A SIDEWALK AND HAS A PUSHBUTTON MOUNTED ON THE SUPPORT.

2. THE TOP OF FOUNDATION SHALL BE FLUSH WITH THE TOP OF CURB ELEVATION IF A CURB IS LOCATED AT THE BACK OF WALK. THE CURB SHALL NOT BE LOCATED BETWEEN THE POLE AND SIDEWALK IF THE SUPPORT HAS A PUSHBUTTON.

AT LOCATIONS WHERE THE EXISTING SLOPE IS 6:1 OR GREATER, THE BURIED DEPTH OF FOUNDATION, AS SHOWN IN SCD TC-21.21 SHALL APPLY TO THE LOW SIDE OF THE SLOPE. THE TOP OF THE FOUNDATION SHALL BE SET 2 INCHES ABOVE THE EXISTING SURFACE ON THE HIGH SIDE OF THE SLOPE. THE ADDITIONAL DEPTH OF FOUNDATION NECESSARY TO MEET THESE REQUIREMENTS SHALL BE ADDED TO THE FORMED TOP.

ITEM 632 SIGNAL SUPPORT FOUNDATION

PRIOR TO ORDERING THE SIGNAL SUPPORTS, THE CONTRACTOR SHALL CONTACT OUPS TO HAVE ALL THE UTILITIES LOCATED IN THE FIELD THEN MEET WITH THE PROJECT ENGINEER TO LOCATE THE PROPOSED SUPPORT LOCATIONS TO INSURE THERE ARE NO CONFLICTS WITH UTILITIES. IF THERE ARE ISSUES, THE PROJECT ENGINEEER SHALL PROVIDE GUIDANCE AS TO THE RELOCATION OF THE SUPPORT POLES.

PAYMENT WILL BE MADE AT THE CONTRACT UNIT PRICE AND WILL BE FULL COMPENSATION FOR ALL LABOR, MATERIALS, TOOLS, EQUIPMENT AND OTHER INCIDENTALS NECESSARY FOR EACH SUPPORT FURNISHED, IN PLACE, COMPLETE AND ACCEPTED.

ITEM 632 PEDESTRIAN SIGNAL HEAD (LED), TYPE D2, COUNTDOWN, AS PER PLAN

IN ADDITION TO THE REQUIREMENTS OF C&MS 632 AND 732 THE FOLLOWING SHALL APPLY:

1. SIGNAL HEADS, BODY AND VISORS SHALL BE CONSTRUCTED OF BLACK POLYCARBONATE PLASTIC AND MEET ITE SPECIFICATIONS.

2. PROPER EXTERIOR COLORS SHALL BE OBTAINED BY USE OF COLORED PLASTIC MATERIAL RATHER THAN PAINTING.

3. PIPE, SPACERS AND FITTINGS CONSTRUCTED OF POLYCARBONATE PLASTIC MAY BE USED IN LIEU OF GALVANIZED STEEL OR ALUMINUM.

4. THE TYPICAL EGG CRATE VISOR IS TO BE REPLACED WITH A TUNNEL VISOR ON 3 SIDES OF THE SIGNAL HEAD HOUSING.

5. THE PEDESTRIAN SIGNAL HEAD SHALL BE OF THE LED COUNTDOWN TYPE.

6. NEW ATTACHMENT HARDWARE AND FITTINGS SHALL BE USED

7. HARDWARE AND FASTENERS THAT ARE NOT STAINLESS STEEL

CALCULATED GSH CHECKED KRM

SIGNAL NOTES

MIA-41-10.32

L:\Troy,OH\19060901-00_WestMainCorridorImprov_\110253\Roadway\Sheets\110253GN001.dgn 10/1/2021 8:13:13 AM jbarbour

SHALL BE PAINTED FEDERAL BLACK AND SHALL MEET ODOT SUPPLEMENTAL SPECIFICATION 916.

8. THE LIGHT EMITTING DIODE (LED) MODULES SHALL MEET THE REQUIREMENTS OF C&MS 732.04-C.

THE CONTRACTOR SHALL PROVIDE THE CITY OF TROY, IN WRITING, WITH THE LED MANUFACTURER NAME, SERIAL NUMBER, PART NUMBER, DESCRIPTION OF LAMP, AND DATE OF MANUFACTURE FOR ALL LED UNITS THAT ARE TO BE USED IN THE SIGNAL HEAD PRIOR TO INSTALLATION, FOR ACCEPTANCE AND WARRANTY PURPOSES.

PAYMENT FOR ITEM 632 PEDESTRIAN SIGNAL HEAD (LED), TYPE D2, COUNTDOWN, AS PER PLAN SHALL BE MADE FOR THE NUMBER OF COMPLETE SIGNAL HEAD FURNISHED AND INSTALLED, INCLUDING ALL LABOR, EQUIPMENT, MATERIALS AND NEW ATTACHMENT HARDWARE.

ITEM 632 PEDESTRIAN PUSHBUTTON, AS PER PLAN

IN ADDITION TO ITEM 632.09, THE PEDESTRIAN PUSHBUTTON SHALL MEET CURRENT REQUIREMENTS OF THE MUTCD AND THE PROPOSED ACCESSIBILITY GUIDELINES FOR PEDESTRIAN FACILITIES IN THE PUBLIC RIGHT OF WAY (PROWAG) REQUIREMENTS AND HAVE THE FOLLOWING FEATURES:

1. THE PUSHBUTTON SHALL HAVE A RAISED ARROW THAT VIBRATES DURING THE WALK INTERVAL.

2. AN INDICATOR LIGHT IS TO BE ON WHEN THE BUTTON IS PUSHED FOR AN ACTUATION.

3. THE PUSHBUTTON IS TO HAVE A LOCATOR TONE.

4. THE PUSHBUTTON IS TO BE MOUNTED USING RUBBER GROMMETS OR INSULATION TO MINIMIZE VIBRATIONS OF ADJACENT BUTTONS.

5. THE PUSHBUTTON SHALL HAVE AN AUDIBLE MESSAGE THAT ALERTS THE VISUALLY IMPAIRED PEDESTRIANS OF THE WALK AND FLASH DON'T WALK INDICATIONS USING SPEECH MESSAGES INSTEAD OF AUDIBLE TONES. SAMPLE MESSAGE WORDING: MAIN STREET. WALK SIGN ON TO CROSS MAIN STREET. THE SPEECH MESSAGE MAY BE ACCESSED BY AN EXTENDED BUTTON PRESS.

6. THE VOLUME OF THE SPEECH MESSAGES SHALL AUTOMATICALLY ADJUST TO THE AMBIENT SOUND. DIFFERENCE SHALL NOT BE MORE THAN 2-5 DB ABOVE AMBIENT SOUNDS.

7. THE APS DEVICE IS TO ENABLE THE PHASE TO REST IN WALK AND THE AUDIBLE WALK MESSAGE BE ACTIVE DURING A PROGRAMMED TIME PERIOD AND THEN REVERT BACK TO THE LOCATOR TONE.

PAYMENT FOR ITEM 632 PEDESTRIAN PUSHBUTTON, AS PER PLAN SHALL BE MADE FOR THE NUMBER OF COMPLETE PUSHBUTTONS FURNISHED AND INSTALLED, INCLUDING ALL LABOR, EQUIPMENT, MATERIALS AND NEW ATTACHMENT HARDWARE.

ITEM 632 VEHICULAR SIGNAL HEAD, (LED), (BY SECTION), 12" LENS, 1-WAY, POLYCARBONATE, AS PER PLAN, BLACK, WITH BACKPLATE

IN ADDITION TO THE REQUIREMENTS OF C&MS 632 AND 732, THE FOLLOWING REQUIREMENTS SHALL APPLY:

1.SIGNAL HEADS, BODY AND VISORS SHALL BE CONSTRUCTED OF BLACK POLYCARBONATE PLASTIC AS SPECIFIED AND MEET ITE SPECIFICATIONS.

2.PROPER EXTERIOR COLORS SHALL BE OBTAINED BY USE OF COLORED PLASTIC MATERIAL RATHER THAN PAINTING.

3. HARDWARE AND FASTENERS THAT ARE NOT STAINLESS STEEL SHALL BE PAINTED FEDERAL BLACK AND SHALL MEET ODOT SUPPLEMENTAL SPECIFICATION 916.

4.ALL SIGNAL HEADS SHALL BE RIGIDLY MOUNTED TO THE MAST ARM WITH THE YELLOW LENS LOCATED IN FRONT OF THE MAST ARM.

5.ALUMINUM BACKPLATES SHALL BE IN ACCORDANCE WITH THE C&MS AND INCLUDE A FLUORESCENT YELLOW REFLECTIVE BORDER.

PAYMENT FOR ITEM 632 VEHICULAR SIGNAL HEAD, (LED), (BY SECTION), 12" LENS, 1-WAY, POLYCARBONATE, AS PER PLAN, BLACK, WITH BACKPLATE SHALL BE MADE FOR COMPLETE SIGNAL HEAD FURNISHED AND INSTALLED, INCLUDING ALL LABOR, EQUIPMENT, MATERIALS, AND NEW ATTACHMENT HARDWARE.

ITEM 632 POWER SERVICE, AS PER PLAN

THIS ITEM SHALL MEET THE REQUIREMENTS OF ODOT 632.24 WITH THE FOLLOWING ADDITIONS:

POWER REQUIREMENTS ARE TO BE 120/240VAC SINGLE PHASE SERVICE. THE POWER SERVICE SHALL BE INSTALLED IN ACCORDANCE WITH ODOT STANDARD CONSTRUCTION DRAWING TC-83.10 AND AS REQUIRED BY THE SERVICING UTILITY. WHERE APPLICABLE, THE CONTRACTOR SHALL PROVIDE A GALVANIZED CONDUIT FROM THE DISCONNECT SWITCH ENCLOSURE TO THE POLE VIA AN EMBEDDED, 1 INCH CONDUIT ELL WITH ALL NECESSARY FITTINGS. A 200 AMP COMMERCIAL METER SOCKET EQUIPPED WITH A BYPASS SWITCH MUST BE FURNISHED (MOUNTED ON THE SIGNAL SUPPORT). AN ODOT KEYED PADLOCK IN ACCORDANCE WITH CMS 631.08 IS TO BE PROVIDED FOR THE DISCONNECT SWITCH ENCLOSURE. ALL CONNECTIONS TO THE ELECTRIC POWER LINES WILL BE MADE BY POWER COMPANY CREWS. ALL POWER SERVICES ARE TO BE UNDERGROUND FROM THE POWER SERVICE POLE TO THE CONTROLLER.

PAYMENT WILL BE MADE AT THE CONTRACT UNIT PRICE BID PER EACH OF ITEM 632 POWER SERVICE, AS PER PLAN.

ITEM 632 REMOVAL OF TRAFFIC SIGNAL INSTALLATION

TRAFFIC SIGNAL INSTALLATIONS, INCLUDING SIGNAL HEADS, CABLE, MESSENGER WIRE, STRAIN POLES, CABINET, CONTROLLER, ETC., SHALL BE REMOVED IN ACCORDANCE WITH CMS 632.26 AND AS INDICATED ON THE PLANS. REMOVED ITEMS SHALL BE DISPOSED IN ACCORDANCE WITH THE LISTING GIVEN ON THE PLANS FOR EACH INTERSECTION. REMOVED ITEMS NOT SHOWN IN THE LISTING SHALL BE STORED ON THE PROJECT FOR SALVAGE BY THE CITY OF TROY.

REMOVED ITEMS IDENTIFIED FOR STORAGE SHALL BE DELIVERED TO THE CITY OF TROY FOR SALVAGE. CONTACT THE CITY ENGINEER TO ARRANGE A MUTUALLY AGREEABLE TIME FOR ITEMS TO BE DELIVERED TO THE CITY OF TROY STREETS DEPARTMENT FACILITY.

THE CONTRACTOR SHALL REMOVE AND DISPOSE OF ITEMS NOT STORED AT NO ADDITIONAL COST TO THE PROJECT. THE CONTRACTOR SHALL ALSO REMOVE ALL EXISTING FOUNDATIONS OF STRAIN POLES AND PEDESTALS TO A MINIMUM OF 1 FOOT BELOW GRADE AND REGRADE/RESOD THE AREA (INCLUDED AS PART OF THE COST OF THIS ITEM).

ITEM 633 CONTROLLER ITEM, MISC.: CABINET, TYPE TS-1, AS PER PLAN

THE CABINET SHALL BE FURNISHED AND INSTALLED ACCORDING TO CMS 633 AND 733 AND BE LISTED ON THE TRAFFIC AUTHORIZED PRODUCT LIST (TAP).

THE GROUND MOUNTED CABINET SHALL BE A NEMA TS-1, TYPE 1, CABINET SIZE 7 WITH 16 LOAD SWITCH BAYS, LED UNDER-SHELF LIGHTING, POWER HARNESSES FOR BOTH TS2 TYPE 1 AND TYPE 2 CONTROLLERS AND SHALL HAVE A MINIMUM OF THREE SHELVES.

THE CABINET SHALL BE FURNISHED WITH AN EDI MMU AS ALLOWED ON THE TAP/APPROVED PRODUCTS LIST.

PAYMENT FOR ITEM 633 CONTROLLER ITEM, MISC.: CABINET, TYPE TS-1, AS PER PLAN WILL BE AT THE CONTRACT UNIT BID PRICE PER EACH COMPLETE AND IN PLACE INCLUDING ALL CONNECTIONS TESTED AND ACCEPTED.

ITEM 633 UNINTERRUPTIBLE POWER SUPPLY (UPS), 1000 WATT, AS PER PLAN

IN ADDITION TO THE REQUIREMENTS OF C&MS 633 AND 733, A CABINET RISER (8 INCH MINIMUM) AND ANCHOR BOLTS WILL BE PROVIDED FOR BASE-MOUNTED CABINETS. THE UPS CABINET SHALL BE BASE-MOUNTED ON THE SIGNAL CONTROLLER/CABINET FOUNDATION. THE FOUNDATION FOR THE SIGNAL CABINET SHALL BE EXPANDED TO ACCOMMODATE THE UPS CABINET.

THE UPS CABINET SHALL INCLUDE A GENERATOR POWER PANEL WITH A HEAVY-DUTY POWER RELAY VERSUS THE LINE VOLTAGE GENERATOR SWITCH. THE GENERATOR INLET SHALL BE A RECESSED PANEL WITH A DOOR THAT IS FLUSH WITH THE EXTERNAL SIDE OF THE UPS CABINET. IT SHALL INCLUDE A RECESSED PLUG, AUTOMATIC TRANSFER SWITCH AND A DOOR THAT SECURELY CLOSES OVER THE POWER CORD.

THE UPS OUTPUT NOTIFICATIONS FOR ON BATTERY, BATTERY 2-HOUR TIMER, AND LOW BATTERY SHALL BE WIRED INTO THE TRAFFIC SIGNAL CABINET BACK PANEL TO PROVIDE SPECIAL STATUS ALARMS FOR EACH OUTPUT INTO THE SIGNAL CONTROLLER.

THIS ITEM SHALL INCLUDE A RED LED STATUS INDICATOR LAMP TO ALLOW MAINTENANCE PERSONNEL AND LAW ENFORCEMENT TO QUICKLY ASSESS WHETHER A TRAFFIC SIGNAL CABINET IS BEING POWERED BY A UPS. THE LED HOUSING SHALL BE NEMA 4X, IP65 OR IP66, RATED FOR OUTDOOR USE AND BE TAMPER/SHATTER RESISTANT. IT SHALL BE A DOMED ENCLOSURE CONTAINING A RED LENS WITH LED THAT IS VISIBLE FROM 100 FOOT MINIMUM. THE ENCLOSURE AND LED MODULE SHOULD BE PLACED AND CENTERED ON THE TOP SURFACE OF THE UPS CABINET AND SEALED FROM WATER INTRUSION. IT SHOULD BE WIRED USING MINIMUM 20GA STRANDED, INSULATED HOOKUP WIRE TO THE STATUS RELAY OUTPUTS OF THE UPS. THE WIRES SHALL BE TERMINATED BY LUGS AT THE DISPLAY END AND PERMANENTLY LABELED "BACKUP POWER STATUS DISPLAY," WITH WIRE POLARITY INDICATED. THE RED LED SHALL ONLY ILLUMINATE TO INDICATE THE CABINET IS OPERATING UNDER UPS BACKUP POWER (THE "BACKUP" OPERATING CONDITION). THIS ITEM INCLUDES PROGRAMMING THE UPS STATUS RELAY OUTPUTS TO PRODUCE THE LAMP STATUS DISPLAYS. THESE STATUS DISPLAYS WILL BE SOLID 100% DUTY CYCLE (NOT FLASHING) DISPLAYS. THE OPERATING VOLTAGE OF THE LED LAMP SHALL BE 120V AC UNLESS OTHERWISE INDICATED.

ITEM 809 ATC CONTROLLER, AS PER PLAN

THE CONTROLLER UNIT SHALL BE FURNISHED AND INSTALLED PER SS 809 AND BE LISTED ON THE TRAFFIC AUTHORIZED PRODUCTS (TAP) LIST.

THE CONTROLLER SHALL BE AN ECONOLITE COBALT AND COMPATIBLE WITH THE CABINET TYPE BEING INSTALLED.

ITEM 809 ADVANCE RADAR DETECTION, AS PER PLAN

THIS ITEM OF WORK SHALL CONSIST OF FURNISHING AND INSTALLING AN ADVANCE RADAR DETECTION UNIT. THE DETECTION UNIT SHALL INCLUDE THE FOLLOWING:

1. POWER SHALL BE PROVIDED FROM THE TRAFFIC CABINET.

2. ALL REQUIRED INPUTS CARDS SHALL BE INCLUDED IN THE TRAFFIC CABINET AND SHALL BE COMPATIBLE WITH CALTRANS, NEMA TS1 AND NEMA TS2 DETECTOR RACKS. THE CARDS SHALL PROVIDE TRUE PRESENCE DETECTOR CALLS OR CONTACT CLOSURE TO THE TRAFFIC CONTROLLER.

3. THE UNIT SHALL BE MOUNTED DIRECTLY TO A POLE OR MAST ARM, AS RECOMMENDED BY THE MANUFACTURER. CABLE(S) SHALL BE PROVIDED AS REQUIRED AND RECOMMENDED BY THE MANUFACTURER.

4. SURGE PROTECTION DEVICES, AS RECOMMENDED BY THE MANUFACTURER SHALL BE INCLUDED BOTH AT THE POLE WHERE THE UNIT IS LOCATED TO PROTECT THE UNIT AND IN THE TRAFFIC CABINET TO PROTECT THE CABINET ELECTRONICS.

5. THE MANUFACTURER'S REPRESENTATIVE SHALL BE ON SITE DURING INSTALLATION AND TESTING AND SHALL PROVIDE ON-SITE TRAINING ON THE SETUP, OPERATION AND MAINTENANCE OF THE UNIT.

7. THE POWER SUPPLY AND COMMUNICATION MODULES SHALL BE SECURED TO A SINGLE PANEL THAT CAN BE MOUNTED INTERIOR TO THE TRAFFIC CABINET. THE PANEL SHALL INCLUDE MODULAR-PLUG STYLE CONNECTIONS FOR UP TO FOUR (4) SENSOR CABLES. ADDITIONAL SENSORS MAY BE HARD-WIRED TO THE COMMUNICATION MODULES, AS NECESSARY.

PAYMENT FOR ITEM 809 ADVANCE RADAR DETECTION SHALL BE MADE AT THE CONTRACT UNIT PRICE FOR EACH UNIT, COMPLETE AND IN PLACE INCLUDING ALL REQUIRED CABINET HARDWARE, MOUNTING BRACKETS, CABLES, CONDUIT, CONNECTIONS TESTED AND ACCEPTED, AND ANY OTHER NECESSARY HARDWARE TO ESTABLISH A FULLY FUNCTIONAL DETECTION SYSTEM.

ITEM 816 VIDEO DETECTION SYSTEM, AS PER PLAN (ALTERNATE BID A)

THE CONTRACTOR SHALL SUPPLY A VIDEO DETECTION SYSTEM WITH 1-4 DISTINCT CAMERAS (ONE PER DIRECTION AS OUTLINED IN THE PLANS) AT THE INTERSECTIONS THAT MEET THE REQUIREMENTS OF ODOT SUPPLEMENTAL SPECIFICATIONS 816 AND 907. THE LATEST MODEL CAMERAS SHALL BE PROVIDED. THEY SHALL ALSO BE ACCESSIBLE FROM A VIDEO MONITORING AND EDITING SOFTWARE INTERFACE TO ACCESS THE CAMERAS FROM INSIDE THE CABINET. A SMALL-SCALE VIEWING MONITOR SHALL BE PROVIDED IN EACH CABINET THAT ALLOWS THE DETECTION ZONES AND ACTIVATIONS FOR EACH CAMERA TO BE VIEWED FROM THE CABINET.

THIS ITEM SHALL INCLUDE ALL CABLING AND CAMERA RISERS AS NECESSARY TO COMPLETE THE INSTALLATION.

PAYMENT FOR ITEM 816 VIDEO DETECTION SYSTEM, AS PER PLAN SHALL BE MADE AT THE CONTRACT UNIT PRICE FOR EACH UNIT, COMPLETE AND IN PLACE INCLUDING ALL REQUIRED CABINET HARDWARE, SOFTWARE, MOUNTING BRACKETS, CABLES, CONDUIT, CONNECTIONS TESTED AND ACCEPTED, AND ANY OTHER NECESSARY HARDWARE TO ESTABLISH A FULLY FUNCTIONAL DETECTION SYSTEM THAT IS ACCESSIBLE FROM THE CABINET.

ITEM 816 VIDEO DETECTION SYSTEM, AS PER PLAN (ALTERNATE BID B)

THIS ITEM OF WORK SHALL MEET ALL THE REQUIREMENTS OF ITEM 816 VIDEO DETECTION SYSTEM, AS PER PLAN (ALTERNATE BID A) EXCEPT THAT THE EQUIPMENT SHALL BE ECONOLITE AUTOSCOPE CAMERA TYPE.

GROUNDING AND BONDING

THE REQUIREMENTS OF THE CONSTRUCTION AND MATERIAL SPECIFICATIONS (CMS) AND THE TC SERIES OF STANDARD CONSTRUCTION DRAWINGS ARE MODIFIED AS FOLLOWS:

1. ALL METALLIC PARTS CONTAINING ELECTRICAL CONDUCTORS SHALL BE PERMANENTLY JOINED TO FORM AN EFFECTIVE GROUND FAULT CURRENT PATH BACK TO THE GROUNDED CONDUCTOR IN THE POWER SERVICE DISCONNECT SWITCH.
A. PROVIDE AN EQUIPMENT GROUNDING CONDUCTOR IN METALLIC CONDUITS (725.04) IN ADDITION TO THE CONDUCTORS SPECIFIED AND BOND THE CONDUIT TO THIS GROUNDING CONDUCTOR.
B. WHEN AN EQUIPMENT GROUNDING CONDUCTOR IS REQUIRED IN PLASTIC CONDUIT (725.05), THE INSTALLATION SHALL INCLUDE A SEPARATE EQUIPMENT GROUNDING CONDUCTOR IN ADDITION TO THE CONDUCTORS SPECIFIED.
C. METALLIC CONDUIT CARRYING THE LOOP WIRES FROM IN THE PAVEMENT TO THE PULL BOX SPLICE LOCATION WILL ONLY BE BONDED AT THE PULL BOX END, AND WILL NOT CONTAIN AN EQUIPMENT GROUNDING CONDUCTOR.
D. IF MULTIPLE CONDUIT RUNS BEGIN AND END AT THE SAME POINTS, ONLY ONE EQUIPMENT GROUNDING CONDUCTOR IS REQUIRED.
E. IF AN EQUIPMENT GROUNDING CONDUCTOR IS NEEDED IN CONDUIT BETWEEN SIGNALIZED INTERSECTIONS FOR UNDERGROUND INTERCONNECT CABLE, THE GROUNDING SYSTEM FOR EACH SIGNALIZED INTERSECTION WILL BE SEPARATED ABOUT MIDWAY BETWEEN THE INTERSECTIONS.
F. THE MESSENGER WIRE AT SIGNALIZED INTERSECTIONS WILL BE USED AS THE CONDUCTIVE PATH FROM CORNER TO CORNER IF CONDUIT IS NOT PROVIDED UNDER THE ROADWAY. WHEN CONDUIT CONNECTS THE CORNERS OF AN INTERSECTION, AN EQUIPMENT GROUNDING CONDUCTOR SHALL BE USED IN THE CONDUIT.

2. CONDUITS.
A. THE 725.04 CONDUIT SHALL HAVE GROUNDING BUSHINGS INSTALLED AT ALL TERMINATION POINTS. THE BUSHING MATERIAL SHALL BE COMPATIBLE WITH GALVANIZED STEEL CONDUIT AND THE GROUNDING LUG MATERIAL SHALL BE COMPATIBLE FOR USE WITH COPPER WIRE. THREADED OR COMPRESSION TYPE BUSHINGS MAY BE USED.
B. THE 725.05 CONDUIT SHALL HAVE THE INSIDE AND OUTSIDE DIAMETERS OF THE CONDUIT DEBURRED AT ALL TERMINATION POINTS.
C. BOTH ENDS OF METALLIC CONDUIT SHALL BE BONDED TO THE EQUIPMENT GROUNDING CONDUCTOR.
D. METALLIC CONDUIT MAY BE BONDED TO METALLIC BOXES THROUGH THE USE OF CONDUIT FITTINGS UL APPROVED FOR THIS TYPE OF CONNECTION, WITH THE BOX BONDED TO THE EQUIPMENT GROUNDING CONDUCTOR.

3. WIRE FOR GROUNDING AND BONDING.
A. USE INSULATED, COPPER WIRE FOR THE EQUIPMENT GROUNDING CONDUCTOR. BONDING JUMPERS IN BOXES AND ENCLOSURES MAY BE BARE OR INSULATED COPPER WIRE. WIRE SIZE SHALL BE AS FOLLOWS:
I. USE 4 AWG BETWEEN THE POWER SERVICE AND SUPPORTS, POLES, PEDESTALS, CONTROLLER OR FLASHER CABINETS.
II. USE A MINIMUM 8 AWG BETWEEN LOOP DETECTOR PULL BOXES AND THE FIRST CONDUIT THAT REQUIRES A LARGERSIZE AS SPECIFIED IN 3.A.I ABOVE.
III. USE A MINIMUM 8 AWG BETWEEN THE "PREPARE TO STOP WHEN FLASHING" INSTALLATION (INCLUDING SUPPORT) AND THE FIRST CONDUIT THAT REQUIRES A LARGER SIZE AS SPECIFIED IN 3.A.I ABOVE.

CALCULATED GSH CHECKED KRM

SIGNAL NOTES

MIA-41-10.32

L:\TroyOH\19060901-00_WestMainCorridorImprov\110253\Roadway\Sheets\110253CN001.dgn 10/1/2021 8:13:13 AM jbarbour

IV. THE INSULATION SHALL BE GREEN OR GREEN WITH YELLOW STRIPE(S). FOR 4 AWG OR LARGER, INSULATION MAY ALSO BE BLACK WITH GREEN TAPE/LABELS INSTALLED AT ALL ACCESS POINTS.
B. IN A HIGHWAY LIGHTING SYSTEM, THE EQUIPMENT GROUNDING CONDUCTOR SHALL BE THE SAME WIRE SIZE AS THE DUCT CABLE OR DISTRIBUTION CABLE CIRCUIT CONDUCTORS, WITH THE MINIMUM CONDUCTOR SIZE OF 4 AWG. BONDING JUMPERS WILL BE MINIMUM SIZE 4 AWG.

4. GROUND ROD.
A. A 3/4 INCH SCHEDULE 40 PVC CONDUIT WILL BE USED IN FOUNDATIONS AND CONCRETE WALLS FOR THE GROUNDING CONDUCTOR (GROUND WIRE) RACEWAY TO THE GROUND ROD. SHOULD METALLIC CONDUIT BE USED, BOTH ENDS OF THE CONDUIT SHALL BE BONDED TO THE GROUNDING CONDUCTOR.
B. THE TYPICAL GROUNDING CONDUCTOR (GROUND WIRE) SHALL BE 4 AWG INSULATED, COPPER.

5. THE GREEN CONDUCTOR IN SIGNAL CABLES (CONDUCTOR #4) SHALL NOT BE USED TO SUPPLY POWER TO A SIGNAL INDICATION. IT WILL BE CONNECTED TO THE SIGNAL BODY AS AN EQUIPMENT GROUND IN ALUMINUM HEADS AND IT WILL BE UNUSED IN PLASTIC HEADS. UNUSED CONDUCTORS SHALL BE GROUNDED IN THE CABINET. TYPICAL USE OF CONDUCTORS IS AS FOLLOWS:

COND. NO./	COLOR/	VEHICLE SIGNAL/	PED SIGNAL
1/	BLACK/	GREEN BALL/	#1 WALK
2/	WHITE/	AC NEUTRAL/	AC NEUTRAL
3/	RED/	RED BALL/	#1 DW/FDW
4/	GREEN/	EQUIPMENT GROUND/	EQUIPMENT GROUND
5/	ORANGE/	YELLOW BALL/	#2 DW FDW
6/	BLUE/	GRN ARROW/	#2 WALK
7/	WHITE W/ BLK STRIPE	YELLOW ARROW/	NOT USED

6. POWER SERVICE AND DISCONNECT SWITCH.
A. AT THE POWER SERVICE LOCATION, THE GROUNDING CONDUCTOR (GROUND WIRE) FROM THE DISCONNECT SWITCH NEUTRAL (AC-) BAR TO THE GROUND ROD SHALL BE A CONTINUOUS, UNSPLICED CONDUCTOR. IF SPLICED, IT SHALL BE AN EXOTHERMIC WELD BUTT SPLICE.
B. THE SERVICE NEUTRAL (AC-) SHALL ONLY BE CONNECTED TO GROUND AT THE PRIMARY POWER SERVICE DISCONNECT SWITCH.
I. NEMA CONTROLLER CABINETS: IF A POWER SERVICE DISCONNECT SWITCH IS LOCATED BEFORE THE CONTROLLER CABINET, THE NEUTRAL (AC-) AND THE GROUNDING BARS IN THE CONTROLLER CABINET SHALL NOT BE CONNECTED TOGETHER AS SHOWN IN NEMA TS-2, FIGURE 5-4.
II. IF SECONDARY DISCONNECT SWITCHES ARE CONNECTED AFTER THE PRIMARY DISCONNECT SWITCH, THE NEUTRAL (AC-) SHALL ONLY BE GROUNDED AT THE PRIMARY SWITCH. EQUIPMENT GROUNDING CONDUCTORS SHALL BE BROUGHT TO THE PRIMARY SWITCH BUT SHALL BE GROUNDED AT BOTH SECONDARY AND PRIMARY SWITCHES.

7. PAYMENT - ALL MATERIALS AND WORK REQUIRED TO COMPLETE THE EFFECTIVE GROUND FAULT CURRENT PATH SYSTEM ARE INCIDENTAL TO THE CONDUCTORS INSTALLED BY CONTRACT.

GUARANTEE

THE CONTRACTOR SHALL GUARANTEE THAT THE TRAFFIC CONTROL SYSTEM INSTALLED AS PART OF THIS CONTRACT SHALL OPERATE SATISFACTORILY FOR A PERIOD OF 120 DAYS FOLLOWING COMPLETION OF THE 10-DAY PERFORMANCE TEST. IN THE EVENT OF UNSATISFACTORY OPERATION THE CONTRACTOR SHALL CORRECT FAULTY INSTALLATIONS, MAKE REPAIRS AND REPLACE DEFECTIVE PARTS WITH NEW PARTS OF EQUAL OR BETTER QUALITY.

EQUIPMENT, MATERIAL AND LABOR COSTS INCURRED IN CORRECTING AN UNSATISFACTORY OPERATION SHALL BE BORNE BY THE CONTRACTOR.

THE GUARANTEE SHALL COVER THE FOLLOWING ITEMS OF THE TRAFFIC CONTROL SYSTEM: CONTROLLER, CABINET, UNINTERRUPTIBLE POWER SUPPLY, VEHICLE DETECTION EQUIPMENT, LED LAMP UNITS, NETWORK AND COMMUNICATION/ INTERCONNECT EQUIPMENT.

CUSTOMARY MANUFACTURER'S GUARANTEES FOR THE FOREGOING ITEMS SHALL BE TURNED OVER TO THE STATE OR THE MAINTAINING AGENCY FOLLOWING ACCEPTANCE OF THE EQUIPMENT.

THE COST OF GUARANTEEING THE TRAFFIC CONTROL SYSTEM WILL BE INCIDENTAL TO AND INCLUDED IN THE CONTRACT UNIT PRICE OF THE VARIOUS ITEMS MAKING UP THE SYSTEM.

L:\Troy\OH\19060901-00_WestMainCorridorImprov\110253\Roadway\Sheets\110253CN001.dgn 10/1/2021 8:13:14 AM jbarbour

CALCULATED GSH
CHECKED KRM

SIGNAL NOTES

MIA-41-10.32

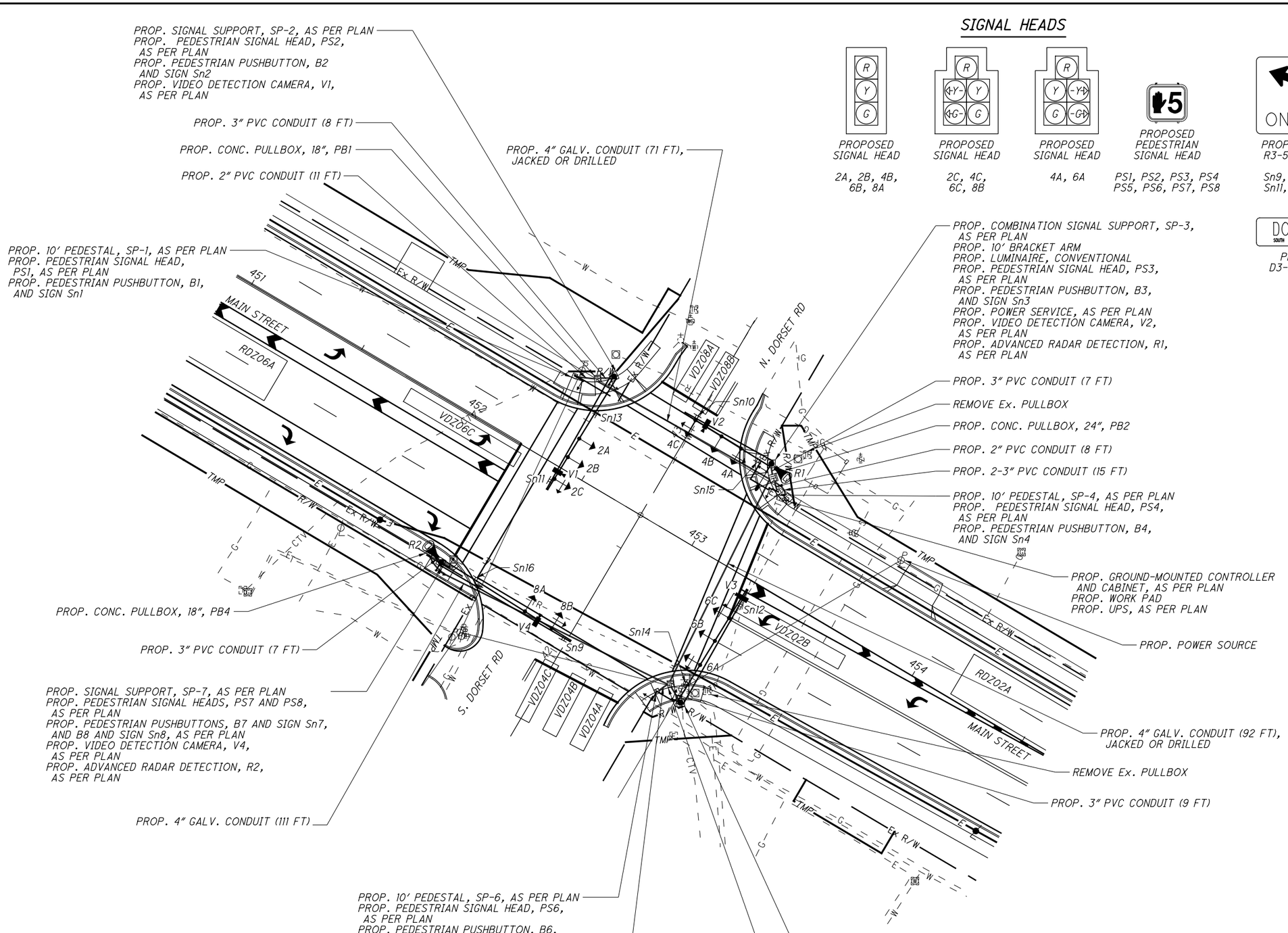

SIGNAL HEADS

PROPOSED SIGNAL HEAD — 2A, 2B, 4B, 6B, 8A

PROPOSED SIGNAL HEAD — 2C, 4C, 6C, 8B

PROPOSED SIGNAL HEAD — 4A, 6A

PROPOSED PEDESTRIAN SIGNAL HEAD — PS1, PS2, PS3, PS4 PS5, PS6, PS7, PS8

SIGNS

PROPOSED R3-5L-30 — Sn9, Sn10 Sn11, Sn12

PROPOSED R10-3E(R)-9 — Sn2, Sn4, Sn7, Sn8

PROPOSED R10-3E(L)-9 — Sn1, Sn3, Sn5, Sn6

72" DORSET RD SOUTH 18" — PROPOSED D3-1-(SPECIAL) — Sn13

72" DORSET RD NORTH SOUTH 18" — PROPOSED D3-1-(SPECIAL) — Sn14

60" W Main St 18" — PROPOSED D3-1-60 — Sn15, Sn16

REMOVAL OF TRAFFIC SIGNAL ITEMS FOR DISPOSAL:

STRAIN POLES	(4)
SIGNAL HEADS	(8)
PEDESTRIAN SIGNAL HEADS	(8)
PEDESTRIAN PUSHBUTTONS	(8)
SIGNS	(8)
CABINET	(1)

PULLBOX TABLE

PULL BOX #	STATION	SIDE	OFFSET	SIZE (IN.)
PB1	452+35.08	LT	37.4	18
PB2	453+13.99	LT	38.89	24
PB3	453+20.41	RT	50.7	18
PB4	452+13.33	RT	54.25	18

LEGEND

	PROP	EXIST
TRAFFIC SIGNAL, 3 UNIT HEAD, 12"	●→	○→
TRAFFIC SIGNAL, 4 OR 5 UNIT HEAD, 12"	●→	○→
SIGNAL SUPPORT POLE	■	□
PEDESTRIAN SIGNAL	┐	┐
PEDESTRIAN PUSH BUTTON	—	—
PEDESTAL SUPPORT	▫	▫
LUMINAIRE	●—	○—
CONTROLLER CABINET AND WORK PAD (TS-1)	▣	▣
TRAFFIC PULL BOX	TR	TR
DILEMMA ZONE RADAR DETECTION UNIT	◀D	◁D
VIDEO DETECTION CAMERA	■	□
DETECTOR ZONE	▭	

HORIZONTAL SCALE IN FEET: 0, 10, 20, 40

CALCULATED GSH CHECKED KRM

TRAFFIC SIGNAL PLAN
DORSET ROAD & MAIN STREET

MIA-41-10.32

L:\Troy\OH\19060901-00_WestMainCorridorImprov\110253\Roadway\Sheets\110253CP001.dgn 10/1/2021 8:13:26 AM jbarbour

SIGNAL TIMING CHART (TEM FORM 496-3)

INTERSECTION: DORSET RD & MAIN STREET MAINTAINING AGENCY: CITY OF TROY									
START UP		DUAL ENTRY:	YES	PHASES:			2&6, 4&8		
		REST IN RED:		RING 1	-		RING 2	-	
START IN: YELLOW/RED FLASH TIME FOR: FLASH , ALL RED (SEC.): 9, 6 FIRST PHASE(S): 2, 6 COLOR DISPLAYED: YELLOW		OVERLAP			A	B	C	D	
		PHASES			-	-	5, 4	7, 6	
INTERVAL OR FEATURE		CONTROLLER MOVEMENT NO.							
INTERSECTION MOVEMENT (PHASE)		1	2	3	4	5	6	7	8
DIRECTION		EB-LT	WB	SB-LT	NB	WB-LT	EB	NB-LT	SB
MINIMUM GREEN (INITIAL)	(SEC.)	7	20	7	10	7	20	7	10
ADDED INITIAL	*(SEC./ACTUATION)	-	-	-	-	-	-	-	-
MAXIMUM INITIAL	(SEC.)	-	-	-	-	-	-	-	-
PASSAGE TIME (PRESET GAP)	(SEC.)	1	-	3	3	1	-	3	3
TIME BEFORE REDUCTION	*(SEC.)	-	-	-	-	-	-	-	-
MINIMUM GAP	*(SEC.)	-	-	-	-	-	-	-	-
TIME TO REDUCE	*(SEC.)	-	-	-	-	-	-	-	-
MAXIMUM GREEN I	(SEC.)	20	45	20	30	20	45	20	30
MAXIMUM GREEN II	(SEC.)	20	45	20	30	20	45	20	30
YELLOW CHANGE	(SEC.)	3.0	4.2	3.0	3.4	3.0	4.2	3.0	3.4
ALL RED CLEARANCE	(SEC.)	1.4	1.0	1.6	1.5	1.4	1.0	1.6	1.5
DELAYED GREEN (LPI) #	(SEC.)	-	-	-	-	-	-	-	-
FLASHING YELLOW ARROW DELAY°	(SEC.)	-	-	-	-	-	-	-	-
WALK	(SEC.)	-	10	-	11	-	10	-	11
PEDESTRIAN CLEARANCE	(SEC.)	-	19	-	20	-	19	-	20
RECALL	MAXIMUM (ON/OFF)	OFF	OFF	OFF	OFF	OFF	OFF	OFF	OFF
	MINIMUM (ON/OFF)	OFF	ON	OFF	OFF	OFF	ON	OFF	OFF
	PEDESTRIAN (ON/OFF)	OFF	OFF	OFF	OFF	OFF	OFF	OFF	OFF
MEMORY	(ON/OFF)	-	-	-	-	-	-	-	-

*VOLUME DENSITY CONTROLS

#FOR CROSSING WITH PEDESTRIAN PUSHBUTTONS, LPI'S (LEADING PEDESTRIAN INTERVALS) MAY BE IMPLEMENTED (3-6 SEC.) IN ACCORDANCE WITH LPI DURATION TIME PER THE ODOT SIGNAL CALCULATIONS - CLEARANCE INTERVALS SPREADSHEET.

°WHEN IMPLEMENTING FYA, A MINIMUM 3 SECOND DELAY SHALL BE PROGRAMMED.

PHASING DIAGRAM

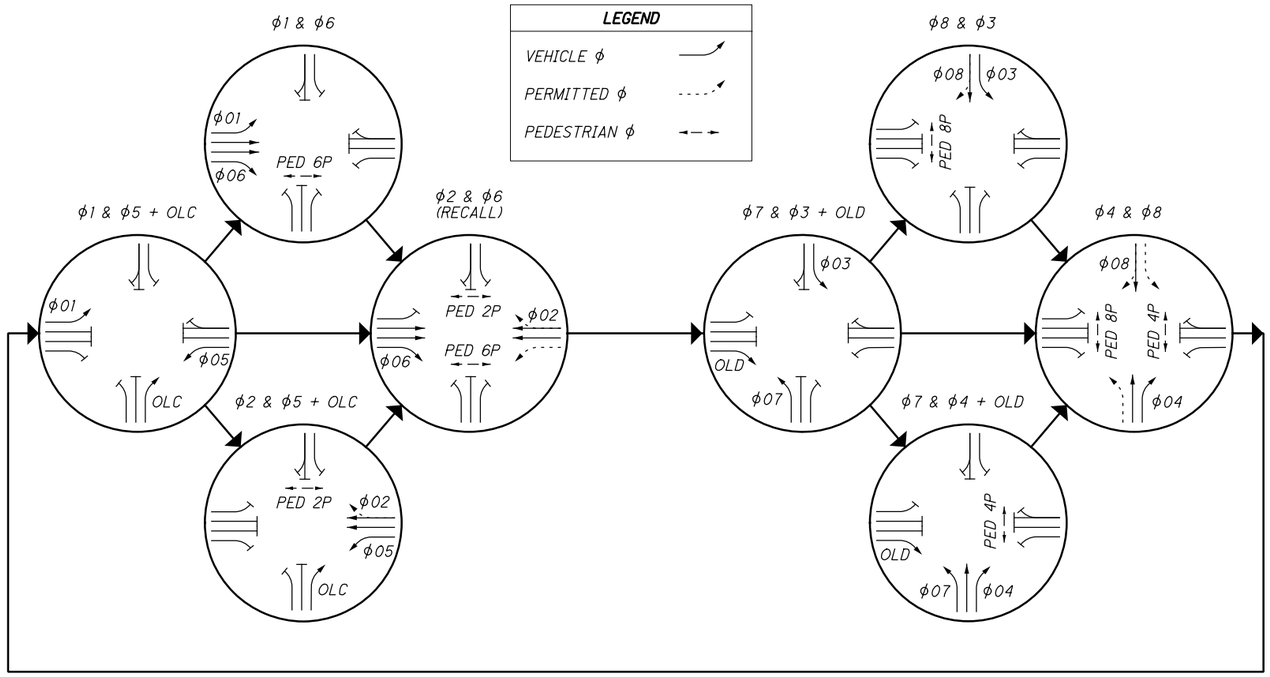

NOTES:

- ϕ1, ϕ3, ϕ4, ϕ5, ϕ7 AND ϕ8 SHALL BE ACTUATED. THE PRIMARY THRU MOVEMENT SHOULD HAVE MIN RECALL ACTIVE TO REST IN GREEN.
- FOR PROTECTED/PERMISSIVE PHASES, IMPLEMENT CALL OMITS TO AVOID YELLOW BALL TRAP.
- ENABLE ϕ1, 3 & ϕ5, 7 DETECTOR SWITCHING TO ALLOW ϕ1 & ϕ5 TO EXTEND ϕ2 & ϕ6 OR ϕ3 & ϕ7 TO EXTEND ϕ4 & ϕ8, RESPECTIVELY, WHEN ALLOCATED GREEN TIME FOR LEFT TURN PHASES ARE EXHAUSTED.
- COUNTDOWN PEDESTRIAN SIGNALS SHALL GO TO ZERO ON YELLOW PER OMUTCD FIGURE 4E-2.
- RADAR DETECTION UNITS FOR DILEMMA ZONE DETECTION SHALL PLACE A CONSTANT CALL TO THE CONTROLLER WHEN VEHICLES TRAVEL TIMES TO THE STOP BAR ARE BETWEEN 2.5 AND 6 SECONDS. SPEED TRIGGER SHALL BE SET FOR VEHICLES TRAVELING 35 MPH AND GREATER.
- RADAR SHALL HAVE QUEUE DETECTION CONFIGURED AND A ZONE PLACED AT 100-200 FEET FROM STOP BAR FOR SLOW MOVING VEHICLE EXTENSIONS. SPEED TRIGGER SHALL BE SET AT 1-35 MPH.
- ALL DETECTOR DELAYS SHALL BE PLACED IN THE CONTROLLER.

DETECTION CHART (TEM FORM 496-4)

DETECTION ZONE	MOVEMENT	PULSE OR PRESENCE	ASSOCIATED PHASE	DELAY PROGRAMMED IN CONTROLLER (SEC.)	EXTENSION PROGRAMMED IN CONTROLLER (SEC.)	DETECTOR NO.	DELAY INHIBITED PHASE	PURPOSE	DETECTION ZONE LENGTH (FT)
VDZ04A	NB-RT	PRESENCE	4	5	-	V2	4	SL	25
VDZ04B	NB	PRESENCE	4	-	-	V2	4	SL	25
VDZ04C	NB-LT	PRESENCE	7	2	-	V2	7	SL	25
VDZ08A	SB	PRESENCE	8	-	-	V4	8	SL	25
VDZ08B	SB-LT	PRESENCE	3	2	-	V4	3	SL	25
VDZ02B	WB-LT	PRESENCE	5	2	-	V1	5	SL	50
VDZ06C	EB-LT	PRESENCE	1	2	-	V3	1	SL	50
RDZ02A	WB	PRESENCE	2	-	-	R1	-	ADV	157
RDZ06A	EB	PRESENCE	6	-	-	R2	-	ADV	157

NOTE: ADVANCED DILEMMA ZONE SPEED THRESHOLD SHALL BE GREATER THAN OR EQUAL TO 30 MPH

PURPOSE: STOP-LINE OR ADVANCED DETECTION

CALCULATED GSH
CHECKED KRM

TRAFFIC SIGNAL DETAILS
DORSET ROAD & MAIN STREET

MIA-41-10.32

L:\Troy OH\19060901-00_WestMainCorridorImprov\110253\Roadway\Sheets\110253CP002.dgn 10/1/2021 8:13:28 AM jbarbour

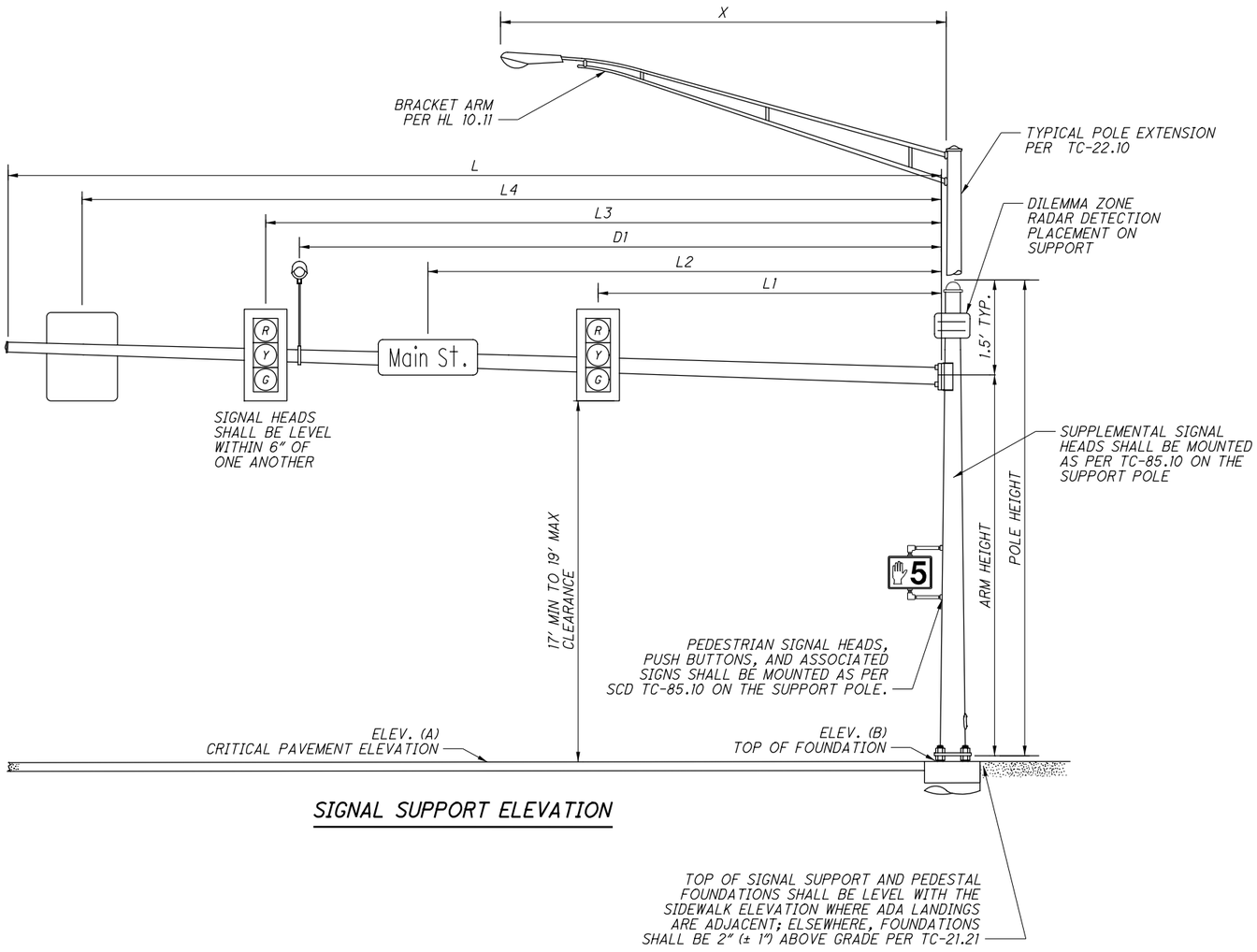

SIGNAL SUPPORT ELEVATION

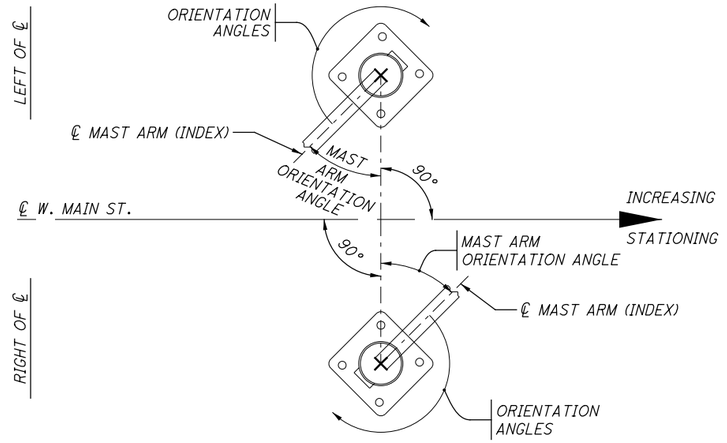

SIGNAL POLE ORIENTATION

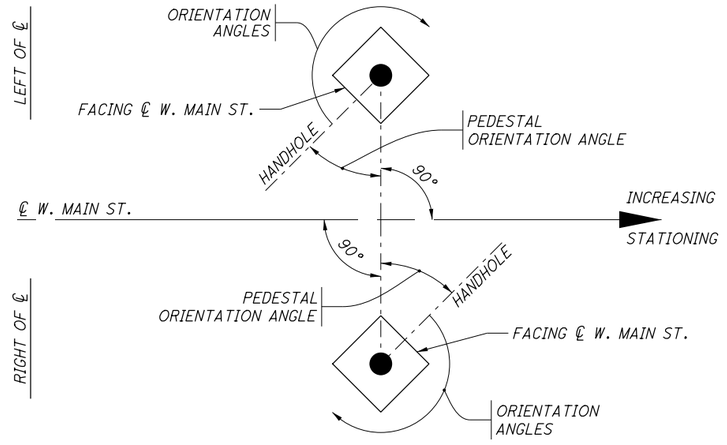

PEDESTAL ORIENTATION

MAST ARM TABLE (TEM FIGURE 498-37 & 38)

SUPPORT NO.	STATION	OFFSET	TYPE	ELEVATION		SUPPORT DETAILS											ORIENTATION ANGLES (SEE FIGURES ABOVE)								
				A (Pavt. Elev.)	B (Top of Found.)	DESIGN TYPE	DESIGN NO.	POLE HEIGHT	ARM HEIGHT	L	L1	L2	L3	L4	L5	X	D1	MAST ARM ANGLE	PEDESTAL ANGLE	PEDESTRIAN SIGNAL	PEDESTRIAN PUSHBUTTON	POWER SERVICE, AS PER PLAN	ADVANCED RADAR DETECTOR	HANDHOLE	CONDUIT ELL(S)	CABLE ENTRANCE 12" FROM TOP
								FT	FT	FT	FT	FT	FT	FT	FT	FT	FT	DEG	DEG	DEG	DEG	DEG	DEG	DEG	DEG	DEG
SP-2	452+40.14	41.28 LT	SIGNAL	877.75	878.09	TC-81.22	13	21.5	20	50	15	27	35	45	47	-	42	0	-	0	0	-	-	180	60	-
SP-3	453+10.46	43.29 LT	SIGNAL	877.43	877.42	TC-81.22	4	30	20	38	4	12	21	33	33	10	28	90	-	350	270	90	180	180	230	90
SP-5	453+27.40	55.09 RT	SIGNAL	877.18	877.27	TC-81.22	13	21.5	20	50	6	15	26	37	43	-	46	0	-	260	260	-	-	180	300	-
SP-7	452+18.94	55.54 RT	SIGNAL	877.17	877.33	TC-81.22	13	21.5	20	58	14	37	49	55	-	-	42	90	-	0 / 90	0 / 90	-	200	180	200	-
SP-1	452+26.91	33.64 LT	PEDESTAL	DOES NOT APPLY	877.74	DOES NOT APPLY		10	DOES NOT APPLY TO PEDESTAL SUPPORTS										350	280	280	-	-	0	250	-
SP-4	452+18.37	35.21 LT	PEDESTAL		877.23			10											30	160	60	-	-	0	110	-
SP-6	453+17.27	55.99 RT	PEDESTAL		877.52			10											310	240	240	-	-	0	80	-

CALCULATED GSH
CHECKED KRM

TRAFFIC SIGNAL DETAILS
DORSET ROAD & MAIN STREET

MIA-41-10.32

L:\Troy\OH\19060901-00_WestMainCorridorImprov\110253\Roadway\Sheets\110253CP003.dgn 10/1/2021 8:13:30 AM jbarbour

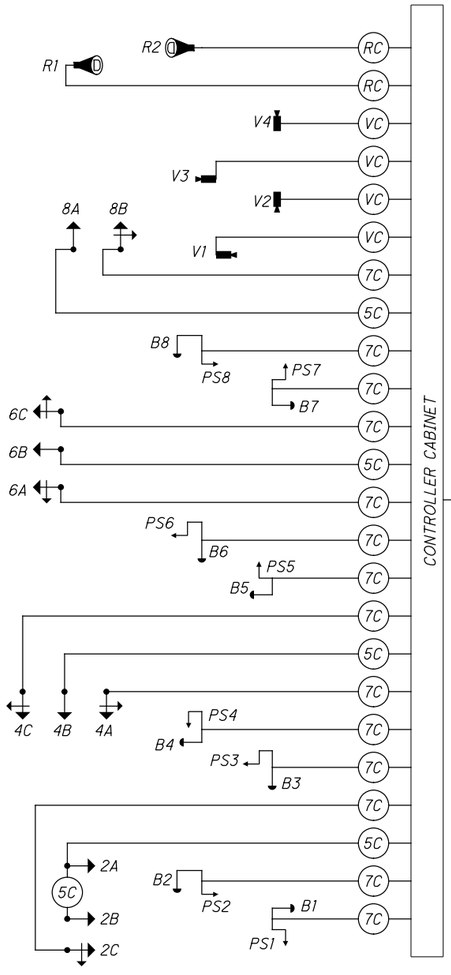

WIRING DIAGRAM

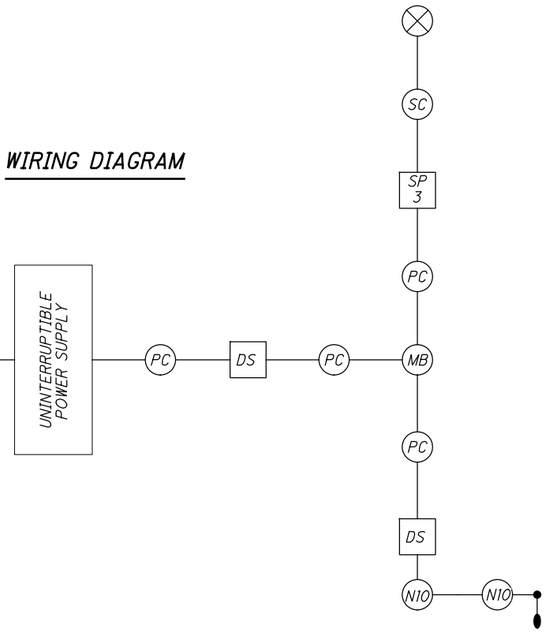

FIELD WIRING HOOK-UP CHART (TEM FORM 496-16)

SIGNAL HEAD	INDICATION	FIELD TERMINAL	FLASH
2A, 2B (WB)	R	2 R	Y
	Y	2 Y	
	G	2 G	
2C (WB LT)	R	2 R	Y
	Y	2 Y	
	G	2 G	
	<--Y---	5 Y	
	<--G---	5 G	
4A (NB RT)	R	4 R	R
	Y	4 Y	
	G	4 G	
	---Y-->	5 Y / LS 14 Y	
	---G-->	5 G / LS 14 G	
4B (NB)	R	4 R	R
	Y	4 Y	
	G	4 G	
4C (NB LT)	R	4 R	R
	Y	4 Y	
	G	4 G	
	<--Y---	7 Y	
	<--G---	7 G	
6A (EB RT)	R	6 R	Y
	Y	6 Y	
	G	6 G	
	---Y-->	7 Y / LS 15 Y	
	---G-->	7 G / LS 15 G	
6B (EB)	R	6 R	Y
	Y	6 Y	
	G	6 G	
LS = LOAD SWITCH			

SIGNAL HEAD	INDICATION	FIELD TERMINAL	FLASH
6C (EB LT)	R	6 R	Y
	Y	6 Y	
	G	6 G	
	<--Y---	1 Y	
	<--G---	1 G	
8A (SB)	R	8 R	R
	Y	8 Y	
	G	8 G	
8B (SB LT)	R	8 R	R
	Y	8 Y	
	G	8 G	
	<--Y---	3 Y	
	<--G---	3 G	
PEDESTRIAN MOVEMENTS			
PED 2P NORTH	W	2 PED / LS 10 G	OUT
	DW	2 PED / LS 10 R	
PED 4P EAST	W	4 PED / LS 11 G	OUT
	DW	4 PED / LS 11 R	
PED 6P SOUTH	W	6 PED / LS 12 G	OUT
	DW	6 PED / LS 12 R	
PED 8P WEST	W	8 PED / LS 13 G	OUT
	DW	8 PED / LS 13 R	
OVERLAPS			
OLC	---Y-->	5 Y / LS 14 Y	OUT
	---G-->	5 G / LS 14 G	
OLD	---Y-->	7 Y / LS 15 Y	OUT
	---G-->	7 G / LS 15 G	

NOTES:

- FOR LOCATIONS WITH LEFT TURN LANES RUN 7C FOR POTENTIAL PT/PM LT PHASE IF INITIAL DESIGN IS FOR PERMITTED ONLY.
- OVERLAPS SHALL BE WIRED TO THE APPROPRIATE LOAD SWITCHES AS PER THE FIELD HOOKUP CHART AND CONFIGURED IN THE CONTROLLER SOFTWARE PER THE SIGNAL TIMING CHART.

LEGEND

- TRAFFIC SIGNAL, 4 OR 5 UNIT HEAD, 12"
- TRAFFIC SIGNAL, 2 UNIT, 3 UNIT, OR PHB HEAD 12"
- TRAFFIC SIGNAL, 3 UNIT HEAD, 12" WITH ARROWS
- PEDESTRIAN SIGNAL
- PEDESTRIAN PUSH BUTTON
- DILEMMA ZONE RADAR DETECTION UNIT
- VIDEO DETECTION CAMERA
- LUMINAIRE
- (5C) SIGNAL CABLE, 5 CONDUCTOR, NO. 14 AWG
- (7C) SIGNAL CABLE, 7 CONDUCTOR, NO. 14 AWG
- (RC) RADAR DETECTION CABLE
- (VC) VIDEO DETECTION CAMERA CABLE
- POWER SOURCE
- (DS) DISCONNECT SWITCH
- (SC) SERVICE CABLE, 3 CONDUCTOR, NO. 8 AWG
- (PC) POWER CABLE, 2 CONDUCTOR, NO. 6 AWG
- (SP 1) SIGNAL SUPPORT POLE NO. __
- (MB) METER BASE
- (N10) THREE RUNS OF NO. 10 AWG POLE & BRACKET CABLE
- (UPS) UNINTERRUPTIBLE POWER SUPPLY CABLE

CALCULATED GSH
CHECKED KRM

TRAFFIC SIGNAL DETAILS
DORSET ROAD & MAIN STREET

MIA-41-10.32

L:\TroyOH\19060901-00_WestMainCorridorImprov\110253\Roadway\Sheets\110253CP004.dgn 10/1/2021 8:13:32 AM jbarbour

SUBSUMMARY

ITEM	QUAN.	UNIT	DESCRIPTION
625	1	EACH	CONNECTION, FUSED PULL APART
625	1	EACH	CONNECTION, UNFUSED PULL APART
625	1	EACH	BRACKET ARM, 10'
625	150	FT	NO. 10 AWG POLE AND BRACKET CABLE
625	27	FT	CONDUIT, 2", 725.05
625	61	FT	CONDUIT, 3", 725.05
625	111	FT	CONDUIT, 4", 725.04
625	163	FT	CONDUIT, JACKED OR DRILLED, 725.04, 4"
625	1	EACH	LUMINAIRE, CONVENTIONAL, SOLID STATE (LED), 194W, TYPE III, 240V
625	184	FT	TRENCH
625	3	EACH	PULL BOX, 725.08, 18"
625	1	EACH	PULL BOX, 725.08, 24"
625	2	EACH	PULL BOX REMOVED
625	8	EACH	GROUND ROD
625	184	FT	UNDERGROUND WARNING/MARKING TAPE
630	8	EACH	SIGN HANGER ASSEMBLY, MAST ARM, AS PER PLAN
630	30	SF	SIGN, FLAT SHEET
630	4	EACH	SIGN, STREET NAME
632	5	EACH	VEHICULAR SIGNAL HEAD, (LED), 3-SECTION, 12" LENS, 1-WAY, POLYCARBONATE, AS PER PLAN, BLACK, WITH BACKPLATE
632	6	EACH	VEHICULAR SIGNAL HEAD, (LED), 5-SECTION, 12" LENS, 1-WAY, POLYCARBONATE, AS PER PLAN, BLACK, WITH BACKPLATE
632	8	EACH	PEDESTRIAN SIGNAL HEAD (LED), TYPE D2, COUNTDOWN, AS PER PLAN
632	11	EACH	COVERING OF VEHICULAR SIGNAL HEAD
632	8	EACH	COVERING OF PEDESTRIAN SIGNAL HEAD
632	6	EACH	PEDESTRIAN PUSHBUTTON
632	2	EACH	PEDESTRIAN PUSHBUTTON, AS PER PLAN
632	730	FT	SIGNAL CABLE, 5 CONDUCTOR, NO. 14 AWG
632	2210	FT	SIGNAL CABLE, 7 CONDUCTOR, NO. 14 AWG
632	4	EACH	SIGNAL SUPPORT FOUNDATION
632	3	EACH	PEDESTAL FOUNDATION
632	70	FT	POWER CABLE, 2 CONDUCTOR, NO. 6 AWG
632	100	FT	SERVICE CABLE, 3 CONDUCTOR, NO. 8 AWG
632	1	EACH	POWER SERVICE, AS PER PLAN
632	3	EACH	SIGNAL SUPPORT, TYPE TC-81.22, DESIGN 13, AS PER PLAN
632	1	EACH	COMBINATION SIGNAL SUPPORT, TYPE TC-81.22, DESIGN 4, AS PER PLAN
632	3	EACH	PEDESTAL, 10', TRANSFORMER BASE, AS PER PLAN
632	1	EACH	REMOVAL OF TRAFFIC SIGNAL INSTALLATION
633	1	EACH	CABINET FOUNDATION
633	1	EACH	CONTROLLER WORK PAD
633	1	EACH	UNINTERRUPTIBLE POWER SUPPLY (UPS), 1000 WATT, AS PER PLAN
633	1	EACH	CONTROLLER ITEM, MISC.: CABINET, TYPE TS-1, AS PER PLAN
809	2	EACH	ADVANCE RADAR DETECTION, AS PER PLAN
809	1	EACH	ATC CONTROLLER, AS PER PLAN
			ALTERNATE BID ITEMS
816	1	EACH	VIDEO DETECTION SYSTEM, AS PER PLAN (ALTERNATE BID A)
816	1	EACH	VIDEO DETECTION SYSTEM, AS PER PLAN (ALTERNATE BID B)

CALCULATED GSH
CHECKED KRM

TRAFFIC SIGNAL DETAILS
DORSET ROAD & MAIN STREET

MIA-41-10.32

L:\Troy\OH\19060901-00_WestMainCorridorImprov\110253\Roadway\Sheets\110253CP005.dgn 10/1/2021 8:13:34 AM jbarbour

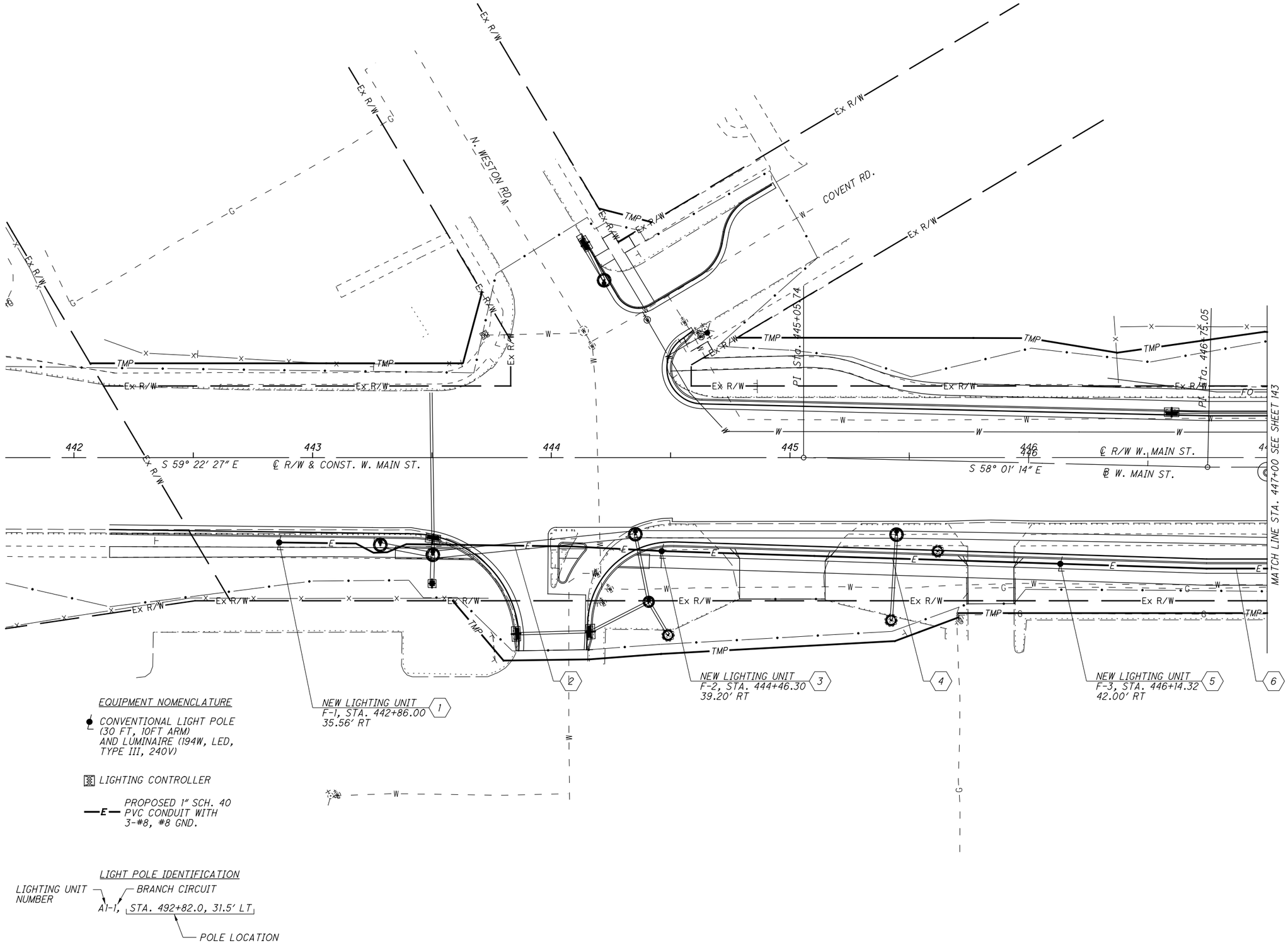

L:\Troy\OH\19060901-00_WestMainCorridorImprov\110253\Lighting\Sheets\110253LP001.dgn 10/1/2021 8:13:44 AM jbarbour

HORIZONTAL SCALE IN FEET
0 10 20 40

CALCULATED JRV
CHECKED JWB

LIGHTING PLAN
STA. 442+00 TO STA. 447+00

MIA-41-10.32

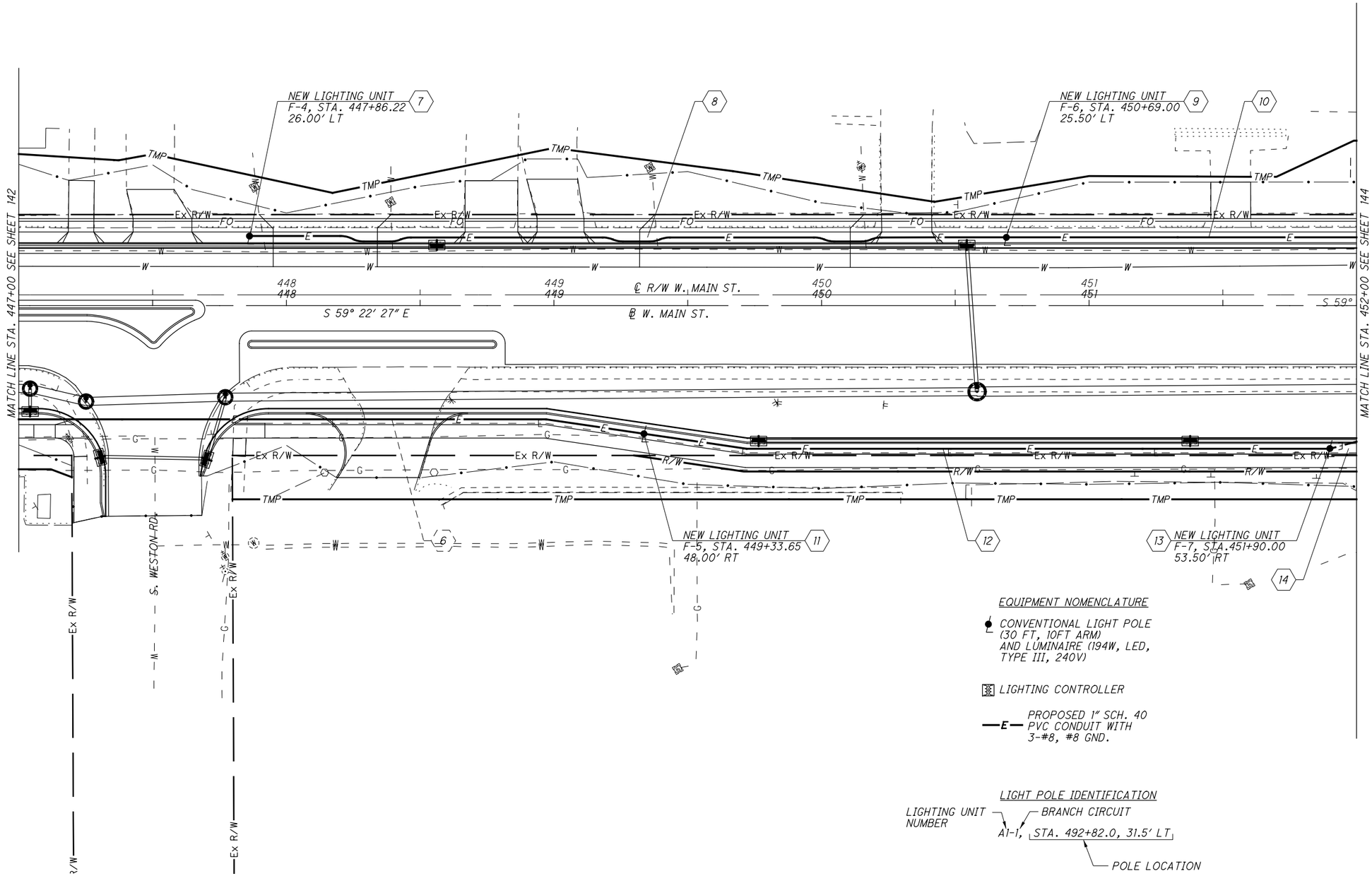

EQUIPMENT NOMENCLATURE

- CONVENTIONAL LIGHT POLE (30 FT, 10FT ARM) AND LUMINAIRE (194W, LED, TYPE III, 240V)
- LIGHTING CONTROLLER
- —E— PROPOSED 1" SCH. 40 PVC CONDUIT WITH 3-#8, #8 GND.

LIGHT POLE IDENTIFICATION

LIGHTING UNIT NUMBER — A1-i, — BRANCH CIRCUIT
STA. 492+82.0, 31.5' LT — POLE LOCATION

HORIZONTAL SCALE IN FEET
0 10 20 40

CALCULATED JRV
CHECKED JWB

LIGHTING PLAN
STA. 447+00 TO STA. 452+00

MIA-41-10.32

143
194

L:\Troy\OH\19060901-00_WestMainCorridorImprov\110253\Lighting\Sheets\110253LP002.dgn 10/1/2021 8:13:55 AM jbarbour

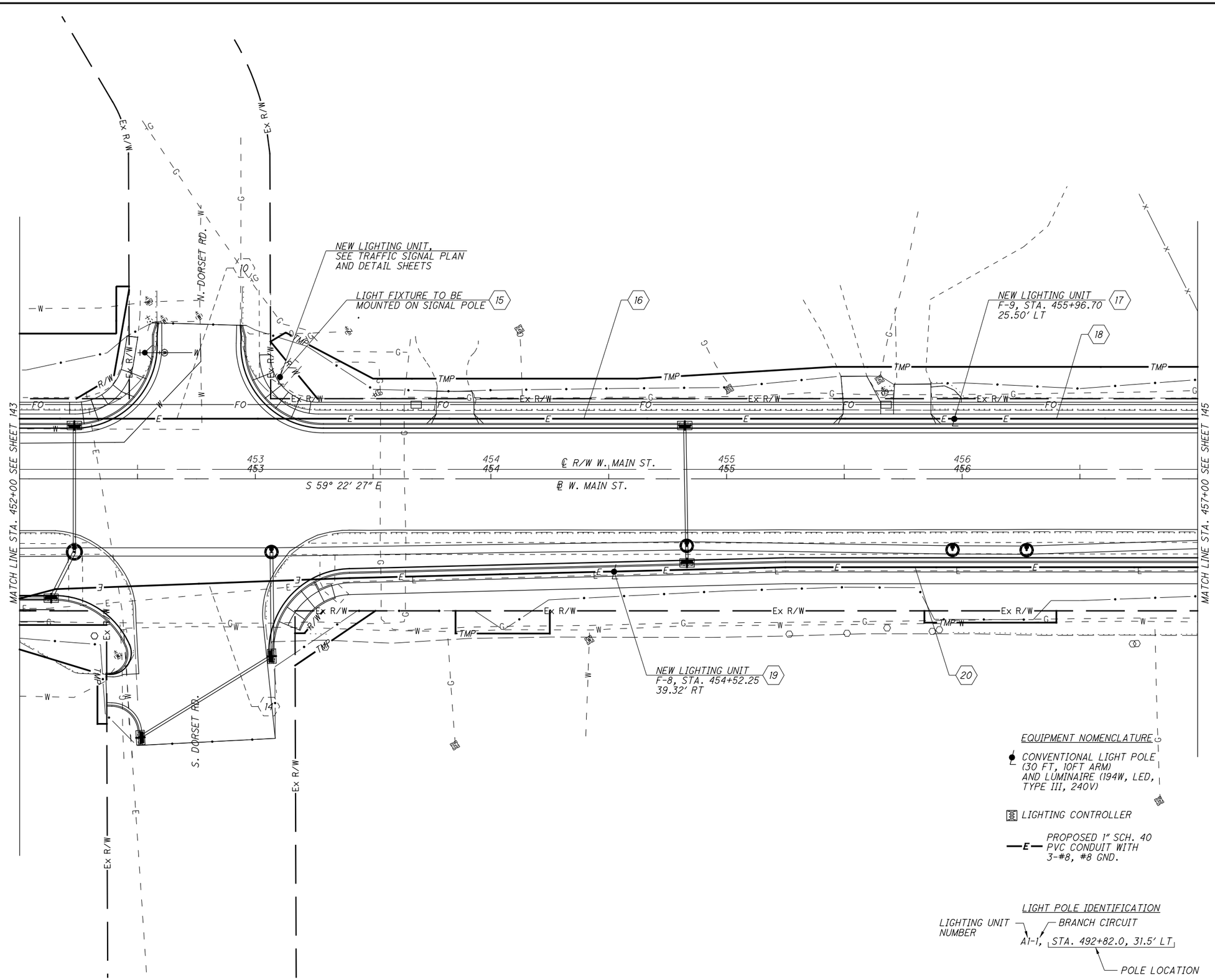

HORIZONTAL SCALE IN FEET
0 10 20 40

CALCULATED JRV
CHECKED JWB

LIGHTING PLAN
STA. 452+00 TO STA. 457+00

MIA-41-10.32

144
194

L:\Troy\OH\19060901-00_WestMainCorridorImprov\110253\Lighting\Sheets\110253LP003.dgn 10/1/2021 8:14:04 AM jbarbour

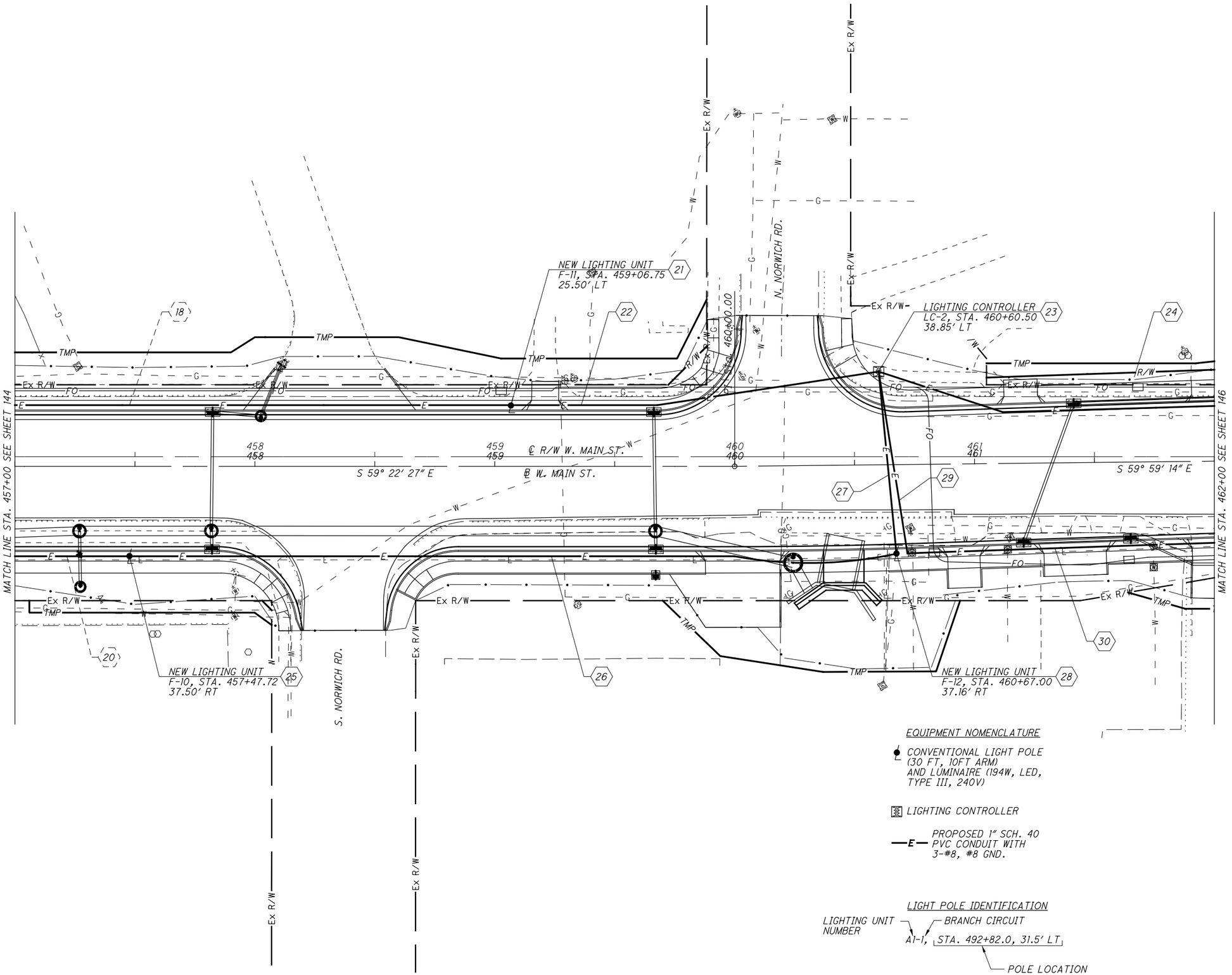

EQUIPMENT NOMENCLATURE

CONVENTIONAL LIGHT POLE (30 FT, 10FT ARM) AND LUMINAIRE (194W, LED, TYPE III, 240V)

LIGHTING CONTROLLER

—E— PROPOSED 1" SCH. 40 PVC CONDUIT WITH 3-#8, #8 GND.

LIGHT POLE IDENTIFICATION

LIGHTING UNIT NUMBER — BRANCH CIRCUIT

A1-1, STA. 492+82.0, 31.5' LT

POLE LOCATION

HORIZONTAL SCALE IN FEET
0 10 20 40

CALCULATED JRV
CHECKED JWB

LIGHTING PLAN
STA. 457+00 TO STA. 462+00

MIA-41-10.32

145
194

L:\Troy\OH\19060901-00_WestMainCorridorImprov\110253\Lighting\Sheets\110253LP004.dgn 10/1/2021 8:14:14 AM jbarbour

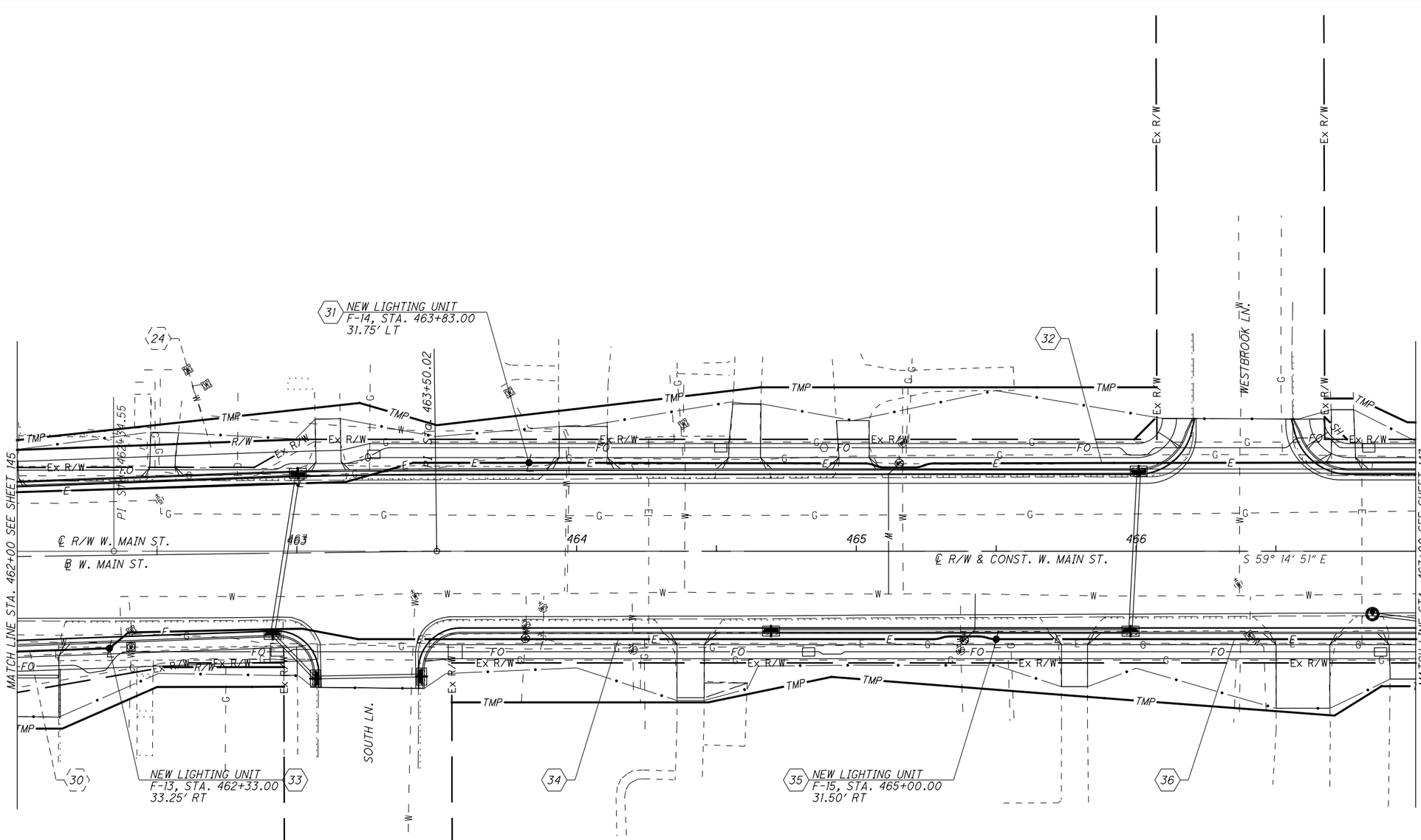

EQUIPMENT NOMENCLATURE

- CONVENTIONAL LIGHT POLE (30 FT, 10FT ARM) AND LUMINAIRE (194W, LED, TYPE III, 240V)
- LIGHTING CONTROLLER
- —E— PROPOSED 1″ SCH. 40 PVC CONDUIT WITH 3-#8, #8 GND.

LIGHT POLE IDENTIFICATION

LIGHTING UNIT NUMBER — A1-1, — BRANCH CIRCUIT — STA. 492+82.0, 31.5′ LT — POLE LOCATION

HORIZONTAL SCALE IN FEET
0 10 20 40

CALCULATED JRV
CHECKED JWB

LIGHTING PLAN
STA. 462+00 TO STA. 467+00

MIA-41-10.32

146
194

L:\TroyOH\19060901-00_WestMainCorridorImprov\110253\Lighting\Sheets\110253LP005.dgn 10/1/2021 8:14:23 AM jbarbour

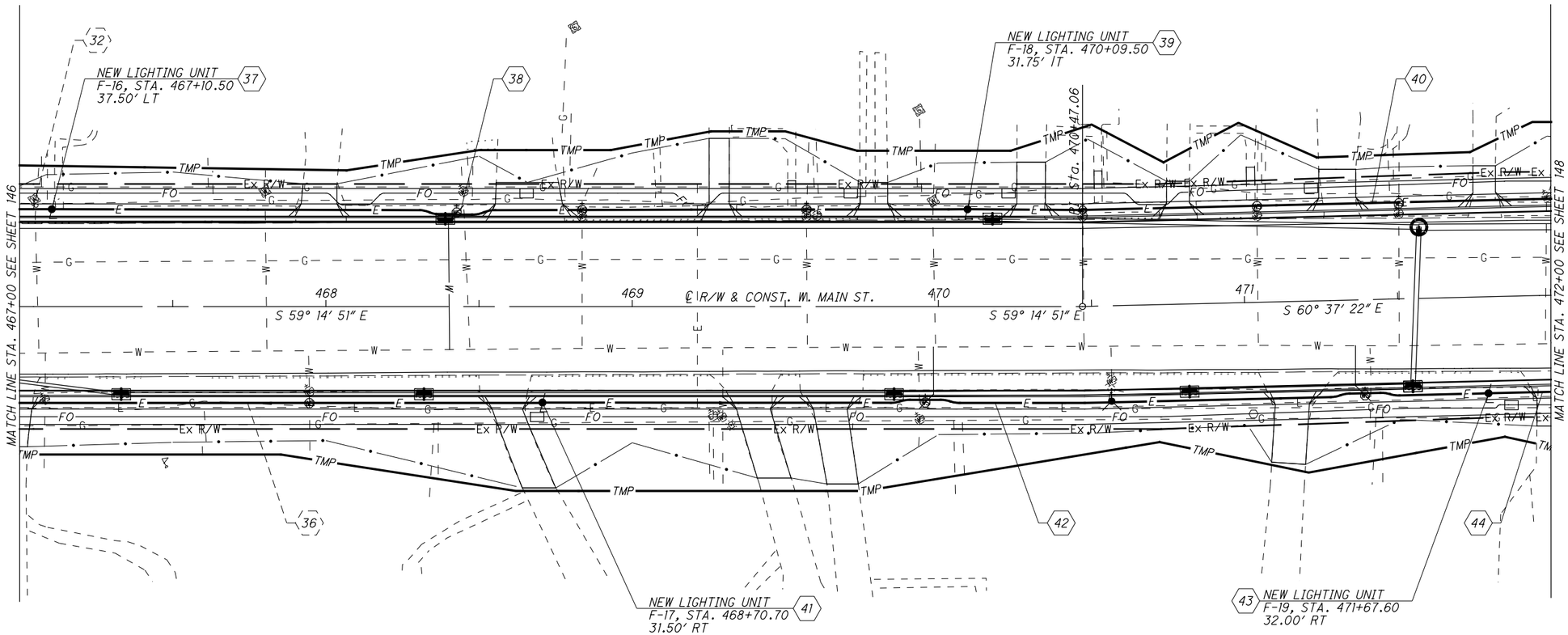

EQUIPMENT NOMENCLATURE

CONVENTIONAL LIGHT POLE (30 FT, 10FT ARM) AND LUMINAIRE (194W, LED, TYPE III, 240V)

LIGHTING CONTROLLER

—E— PROPOSED 1" SCH. 40 PVC CONDUIT WITH 3-#8, #8 GND.

LIGHT POLE IDENTIFICATION

LIGHTING UNIT NUMBER — A1-1, — BRANCH CIRCUIT — STA. 492+82.0, 31.5' LT — POLE LOCATION

N

0 10 20 40 HORIZONTAL SCALE IN FEET

CALCULATED JRV CHECKED JWB

LIGHTING PLAN
STA. 467+00 TO STA. 472+00

MIA-41-10.32

147
194

L:\TroyOH\19060901-00_WestMainCorridorImprov\110253\Lighting\Sheets\110253LP006.dgn 10/1/2021 8:14:32 AM jbarbour

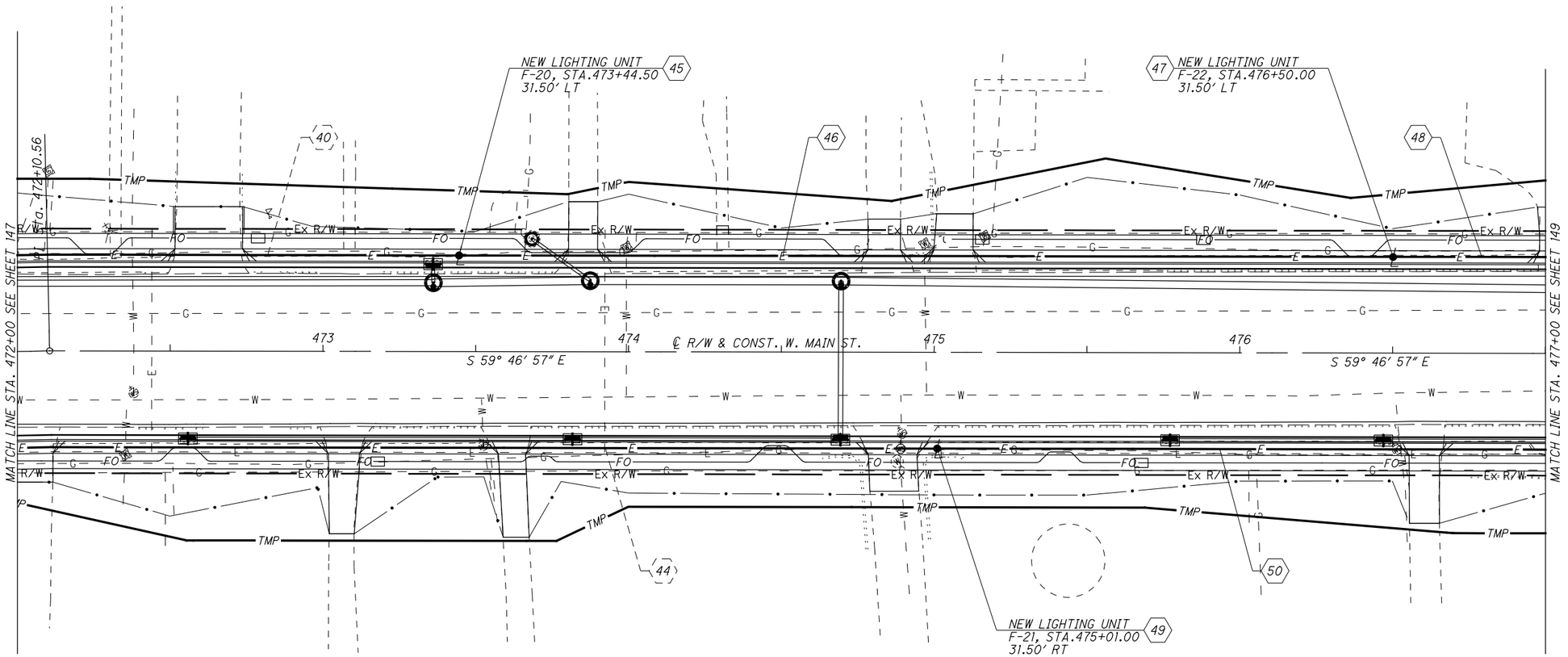

EQUIPMENT NOMENCLATURE

CONVENTIONAL LIGHT POLE (30 FT, 10FT ARM) AND LUMINAIRE (194W, LED, TYPE III, 240V)

LIGHTING CONTROLLER

—E— PROPOSED 1" SCH. 40 PVC CONDUIT WITH 3-#8, #8 GND.

LIGHT POLE IDENTIFICATION

LIGHTING UNIT NUMBER — A1-1, — BRANCH CIRCUIT

STA. 492+82.0, 31.5' LT — POLE LOCATION

HORIZONTAL SCALE IN FEET
0 10 20 40

CALCULATED JRV
CHECKED JWB

LIGHTING PLAN
STA. 472+00 TO STA. 477+00

MIA-41-10.32

148
194

L:\Troy\OH\19060901-00_WestMainCorridorImprov\110253\Lighting\Sheets\110253LP007.dgn 10/1/2021 8:14:42 AM jbarbour

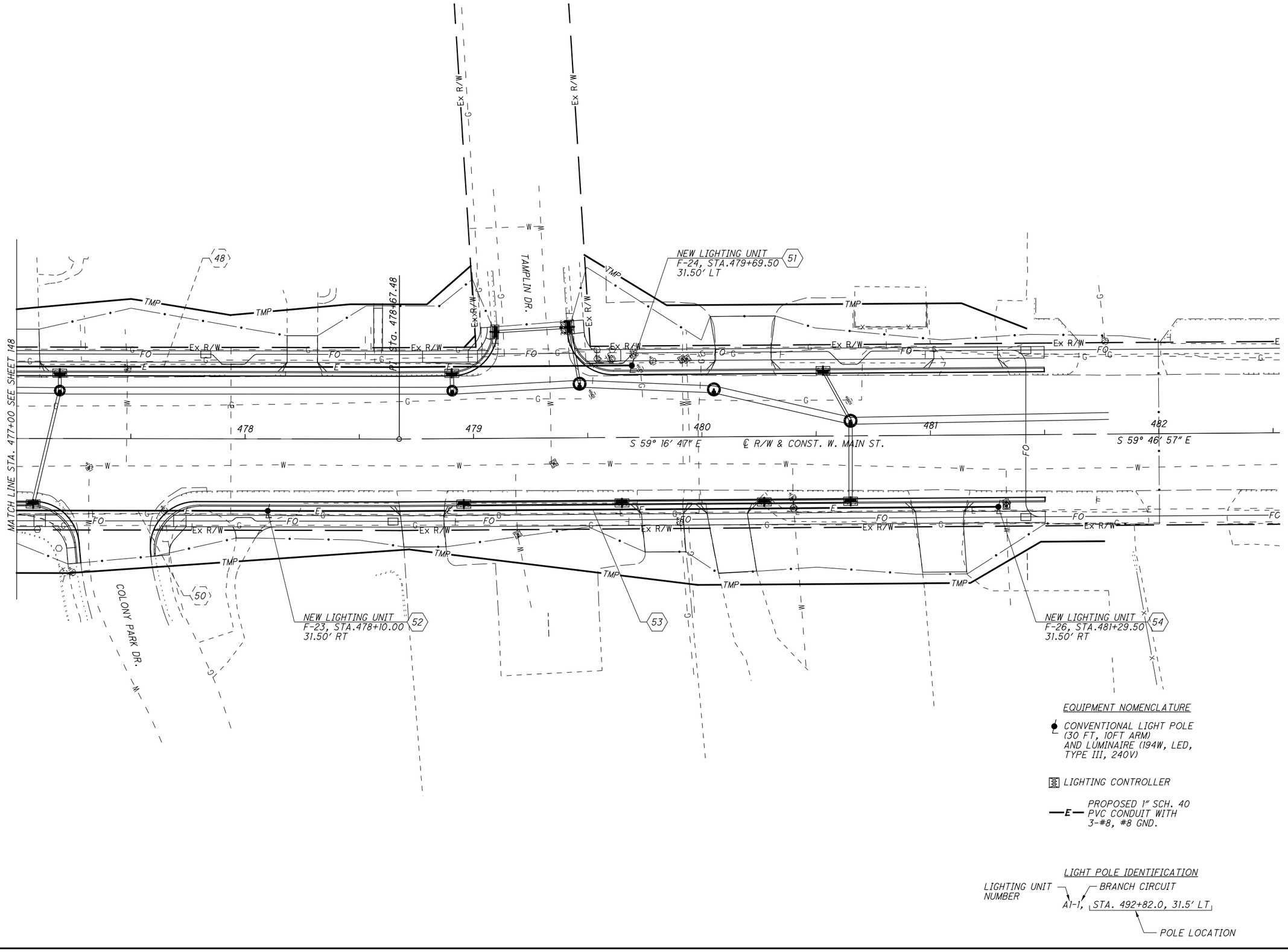

EQUIPMENT NOMENCLATURE

CONVENTIONAL LIGHT POLE (30 FT, 10FT ARM) AND LUMINAIRE (194W, LED, TYPE III, 240V)

LIGHTING CONTROLLER

—E— PROPOSED 1" SCH. 40 PVC CONDUIT WITH 3-#8, #8 GND.

LIGHT POLE IDENTIFICATION

LIGHTING UNIT NUMBER — BRANCH CIRCUIT

A1-1, STA. 492+82.0, 31.5' LT

POLE LOCATION

HORIZONTAL SCALE IN FEET
0 10 20 40

CALCULATED JRV
CHECKED JWB

LIGHTING PLAN
STA. 477+00 TO STA. 482+00

MIA-41-10.32

149
194

L:\Troy\OH\19060901-00_WestMainCorridorImprov\110253\Lighting\Sheets\110253LP008.dgn 10/1/2021 8:14:51 AM jbarbour

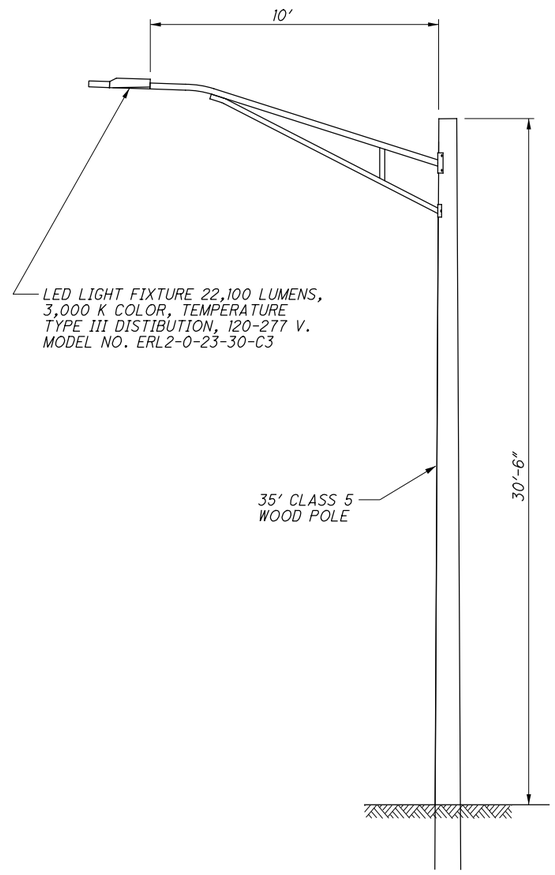

CONVENTIONAL FIXTURE

Code No.	DESCRIPTION	UNIT	QUANTITY
625E00450	CONNECTION, FUSED PULL APART	EACH	50
625E18000	BRACKET ARM, 10'	EACH	25
625E23304	NO. 8 AWG 600 VOLT DISTRIBUTION CABLE	FT	21900
625E23400	NO. 10 AWG POLE AND BRACKET CABLE	FT	2652
625E25104	CONDUIT, 1", 725.051	FT	5990
625E26252	LUMINAIRE, CONVENTIONAL, SOLID STATE (LED), 194W, TYPE III, 240V	EACH	25
625E29002	TRENCH, 24" DEEP	FT	5990
625E30700	PULL BOX, 725.08, 18"	EACH	25
625E32000	GROUND ROD	EACH	25
625E34000	POWER SERVICE	EACH	1
632E89300	WOOD POLE	EACH	25

CALCULATED DJB
CHECKED JWB

LIGHT POLE DETAILS

MIA-41-10.32

150
194

L:\Troy\OH\19060901-00_WestMainCorridorImprov\110253\Lighting\Sheets\110253_LD001.dgn 10/1/2021 8:14:54 AM jbarbour

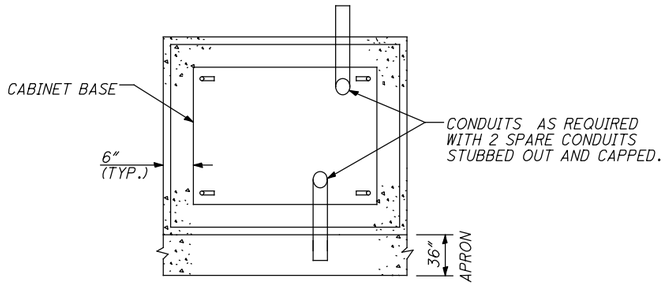

CONTROL CABINET FOUNDATION

TOP VIEW

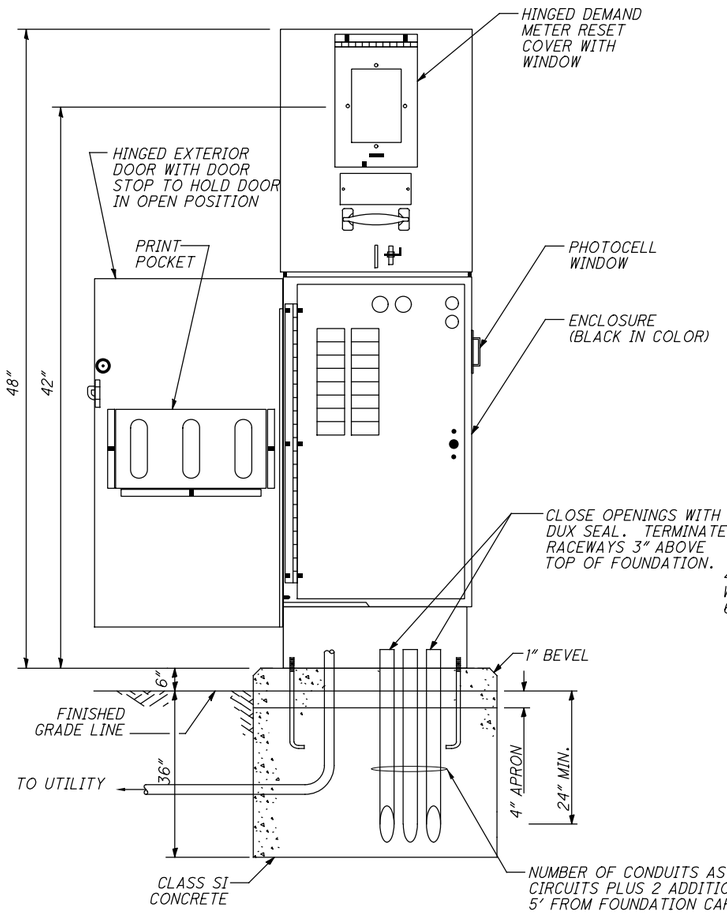

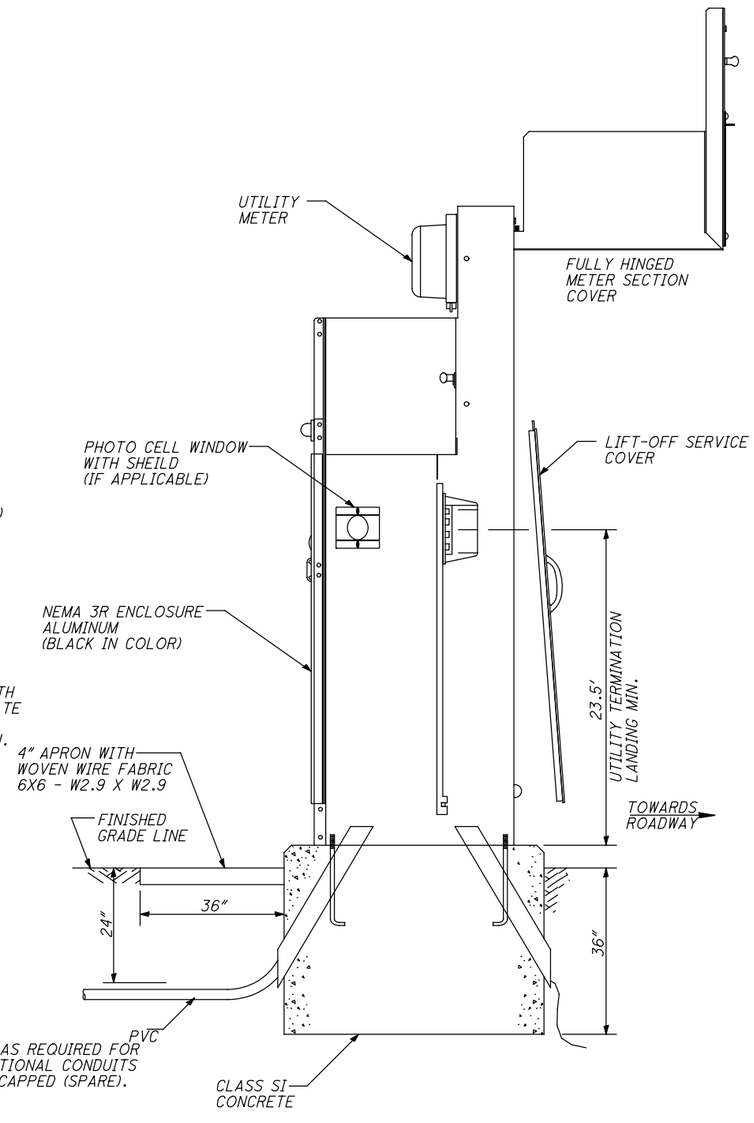

CONTROL, LIGHTING AND FOUNDATION DETAIL

N.T.S

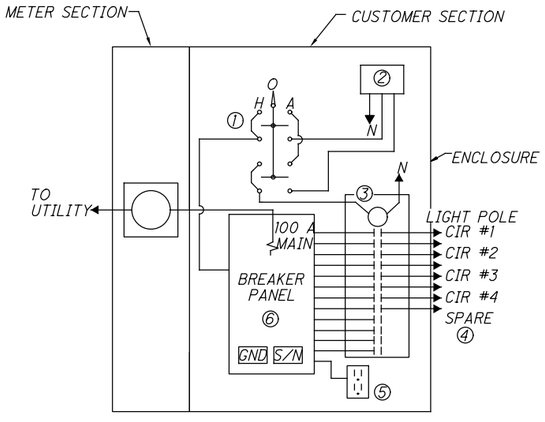

NOTES

1. H-O-A SWITCH WITH ENGRAVED NAMEPLATE AS DETAILED, MOUNTED BEHIND DOOR.
2. PHOTOCELL WITH INTEGRAL SURGE SUPPRESSOR.
3. CONTACTOR, 30A, 12P, 120V COIL, ELECTRICALLY HELD.
4. GND AND NEUTRAL CONDUCTORS NOT SHOW FOR CLARITY.
5. 20 AMP, GFCI CONVENIENCE DUPLEX RECEPTACLE.
6. 100A, 120/240V, SINGLE PHASE, 3 WIRE, 24 POLE BREAKER PANEL WITH 100A MAIN CB OR EQUIVALENT PROVIDE 12 20A, 1P CB AND 6 20A 2P CB

CONTROLLER WIRING DIAGRAM

N.T.S

CALCULATED DJB
CHECKED JWB

LIGHT CONTROLLER DETAILS

MIA-41-10.32

L:\Troy OH\19060901-00_WestMainCorridorImprov\110253\Lighting\Sheets\110253_LD002.dgn 10/1/2021 8:14:55 AM jbarbour

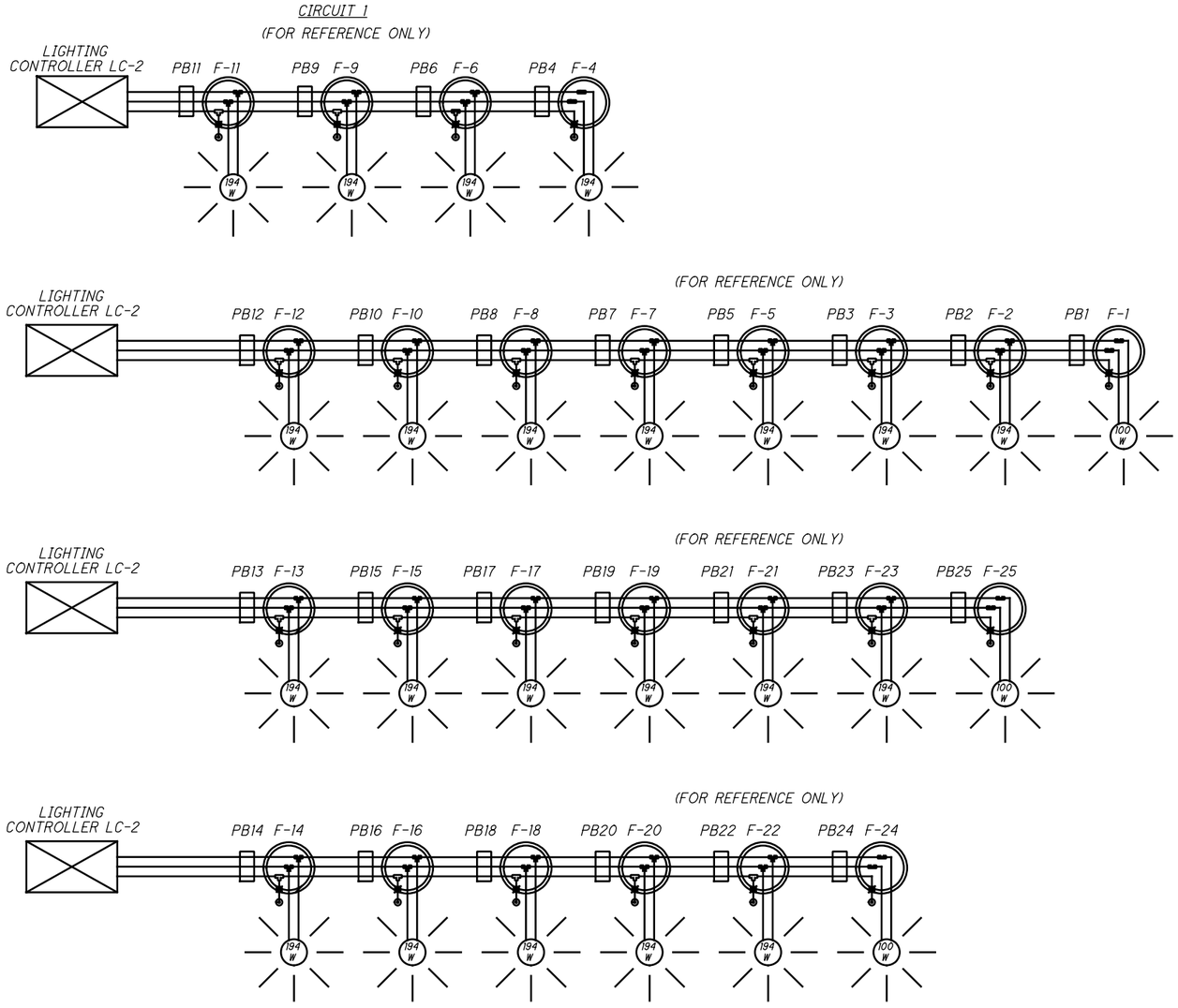

LIGHTING CONTROLLER SCHEDULE								
CONTROLLER DESIGNATION	LINE VOLTAGE (VOLTS)	CONNECTED LOAD (AMPS)	SERVICE ENTRANCE CONDUCTOR SIZE (AWG)	ENCLOSURE RATING (AMPS)	CIRCUIT NO.	CIRCUIT LOAD (AMPS)	CIRCUIT BREAKER SIZE (AMPS)	CIRCUIT WIRE SIZE (AWG)
LC-1	240	21.1	#2	100	#1	4.1	20	#8
					#2	6.5	20	#8
					#3	5.7	20	#8
					#4	4.9	20	#8

SYMBOL LEGEND

- POLE GROUND LUG
- GROUND ROD & SPLICE, 1" DIA x 10' LONG

CONNECTOR KITS, 725.15

- II Y TYPE W/10 AMP UL CLASS CC FUSE, 600 VOLT
- VII Y TYPE SPLICE KIT
- VI INLINE TYPE W/10 AMP UL CLASS CC FUSE, 600 VOLT

PULL BOX

LIGHT POLE

LIGHTING & TRAFFIC POLE

194 W — LUMINAIRE * WATT SIZE SPEC.

LIGHTING CONTROLLER

NOTES

1. SEE ROADWAY LIGHTING PLANS FOR CABLE/CONDUIT INFORMATION AND STATION/OFFSET OF LIGHTING UNITS AND PULL BOXES. CIRCUITS A, B AND C ARE SHOWN FOR REFERENCE ONLY.
2. METERS WILL BE BILLED TO MVLT AND THIS IS TO BE COORDINATED DURING CONSTRUCTION.
3. PULL BOXES TO BE LOCATED AT POLES.

CALCULATED JRV | CHECKED JWB

ONE-LINE LIGHTING DIAGRAM

MIA-41-10.32

L:\Troy\OH\19060901-00_WestMainCorridorImprov\110253\Lighting\Sheets\110253_LD003.dgn 10/1/2021 8:14:57 AM jbarbour 10/1/2021

RIGHT OF WAY
LEGEND SHEET
MIA-41-10.32

MIAMI COUNTY
CONCORD TOWNSHIP
CITY OF TROY
SEC. 20 & 21, T. 5 N., R. 6 E.
CONGRESS LANDS WEST OF THE MIAMI RIVER

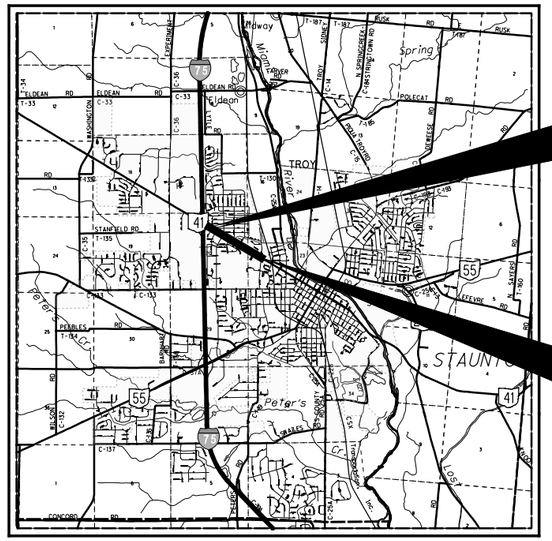

LOCATION MAP

LATITUDE: 40°02'55" LONGITUDE: 84°13'28"

UTILITY OWNERS		
TYPE	*NAME & ADDRESS*	
ELECTRIC:	*THE DAYTON POWER AND LIGHT COMPANY* *1065 WOODMAN DRIVE* *DAYTON, OH 45432* *PHONE: (937) 331-4521*	
FIBER OPTIC:	*CENTURY LINK* *1025 ELDORADO BLVD* *BROOMFIELD, CO 80021* *PHONE: (720) 888-1089*	
GAS:	*CENTERPOINT ENERGY* *1335 E DAYTON YELLOW SPRING ROAD* *FAIRBORN, OH 45324* *PHONE: (800) 339-6594*	
TELECOM:	*CHARTER COMMUNICATIONS* *3691 TURNER ROAD* *DAYTON, OH 45415* *PHONE: (937) 396-8372*	*FRONTIER COMMUNICATIONS* *2444 ST RT 55* *TROY, OH 45373* *PHONE: (937) 335-2624*
TELEPHONE:	*AT&T* *7201 FAR HILLS AVENUE* *DAYTON, OH 45459* *PHONE: (937) 296-3588*	
WATER:	*CITY OF TROY* *100 S MARKET ST* *TROY, OH 45373* *PHONE: (937) 335-4151*	

NOTES: THE LOCATION OF THE UNDERGROUND UTILITIES SHOWN ON THE PLANS ARE OBTAINED FROM THE OWNER OF THE UTILITIES AS REQUIRED BY SECTION 153.64 O.R.C.

CONVENTIONAL SYMBOLS

Township Line
Section Line
Center Line
Right of Way (Ex)
Right of Way (Pr)
Standard Highway Ease.(Ex)
Standard Highway Ease.(Pr)
Temporary Right of Way
Railroad
Construction Limits
Edge of Pavement (Ex)
Edge of Pavement (Pr)
Ownership Hook Symbol , Example
Property Line Symbol , Example
Tree (Pr) , Tree (Ex) , Shrub (Ex)
Tree (Remove) , Shrub (Remove)
Evergreen (Ex) , Stump
Evergreen (Remove) , Stump (Remove)
Post (Ex) , Mailbox (Ex) MB , Mailbox (Pr) MB
Light (Ex) , Telephone Marker (Ex) TEL
Fire Hydrant (Ex) , Water Meter (Ex)
Water Valve (Ex) , Utility Valve Unknown (Ex.)
Telephone Pole (Ex) , Power Pole (Ex)
Light Pole (Ex)

INDEX OF SHEETS:

LEGEND SHEET	1
CENTERLINE PLAT	2-4
PROPERTY MAP	5, 6
SUMMARY OF ADDITIONAL R/W	7-15
R/W TOPOGRAPHIC SHEETS	16, 18, 20, 22, 24, 26, 28, 30, 32
R/W BOUNDARY SHEETS	17, 19, 21, 23, 25, 27, 29, 31, 33

PROJECT DESCRIPTION

WIDENING OF SR 41 (W. MAIN ST.) TO INCLUDE AT LEAST ONE 12' THROUGH LANE IN EACH DIRECTION, RECONSTRUCTING THE SIDEWALK AND CURB LAWN ALONG THE CORRIDOR, UPSIZING A WATER MAIN ALONG A PORTION OF WEST MAIN STREET AND IMPROVING THE STORMWATER SYSTEM ALONG THE CORRIDOR FOR A LENGTH OF 0.81 MILES.

PLANS PREPARED BY:

FIRM NAME : SURVEYING AND MAPPING, LLC
R/W DESIGNER: BRIAN J. OYER
R/W REVIEWER: JEFFREY C. SPONTAK
FIELD REVIEWER: BRIAN J. OYER
PRELIMINARY FIELD REVIEW DATE: 5-27-2020
TRACINGS FIELD REVIEW DATE: 01-11-2021
OWNERSHIP UPDATED BY: BRIAN J. OYER
DATE COMPLETED: 01-12-2021
PLAN COMPLETION DATE: 02-26-2021

STRUCTURE KEY

RESIDENTIAL
COMMERCIAL
OUT-BUILDING

TYPES OF TITLE LEGEND:
WL = FEE SIMPLE WITH LIMITATION OF ACCESS
WD = WARRANTY DEED
PRW = PROPERTY RIGHT FEE SIMPLE
SH = STANDARD HIGHWAY EASEMENT
LA = LIMITED ACCESS EASEMENT
T = TEMPORARY EASEMENT
CH = CHANNEL EASEMENT
A = AERIAL EASEMENT
SL = SLOPE EASEMENT
PRE = PROPERTY RIGHT EASEMENT

I, JEFFREY C. SPONTAK, P. S. have conducted a survey of the existing conditions for the Ohio Department of Transportation on JAN., FEB. & MAR 2019. The results of that survey are contained herein. The horizontal coordinates expressed herein are based on the Ohio State Plane Coordinates System SOUTH Zone on NAD 83 2011 datum. The Project Coordinates (US Survey Feet) are relative to State Plane Grid Coordinates (Meters or US Survey Feet) by a Project Adjustment Factor of 0.99996789. As a part of this project I have reestablished the locations of the existing property lines and the existing centerline of Right of Way for property takes contained herein. As a part of this project I have established the proposed property lines, calculated the Gross Take, present roadway occupied (PRO), Net Take and Net Residue; as well as prepared the legal descriptions necessary to acquire the parcels as shown herein. As a part of this work I have set right of way monuments at the property corners, property line intersection, points along the right of way and/or angle points on the right of way, Section Corners and other points as shown herein. All of my work contained herein was conducted in accordance with Ohio Administrative Code 4733-37 commonly known as "Minimum Standards for Boundary Surveys in the State of Ohio" unless noted. The words I and my as used herein are to mean either myself or someone working under my direct supervision.

JEFFREY C. SPONTAK, Professional Land Surveyor 7856

Date: _____

SURVEYORS SEAL

FEDERAL PROJECT NO. E200284
PID NO. 110253
CALCULATED BJO CHECKED JCS
RIGHT OF WAY LEGEND SHEET
MIA-41-10.32
1 / 33
153 / 194

S:\CIN\4300-4399\4354\004\Drawings\CAD\110253\row\sheets\10253RL001.dgn 10/1/2021 4:39:16 PM Allisonw

MIAMI COUNTY
CONCORD TOWNSHIP
CITY OF TROY
SEC. 20 & 21, T. 5 N., R. 6 E.
CONGRESS LANDS WEST OF THE MIAMI RIVER

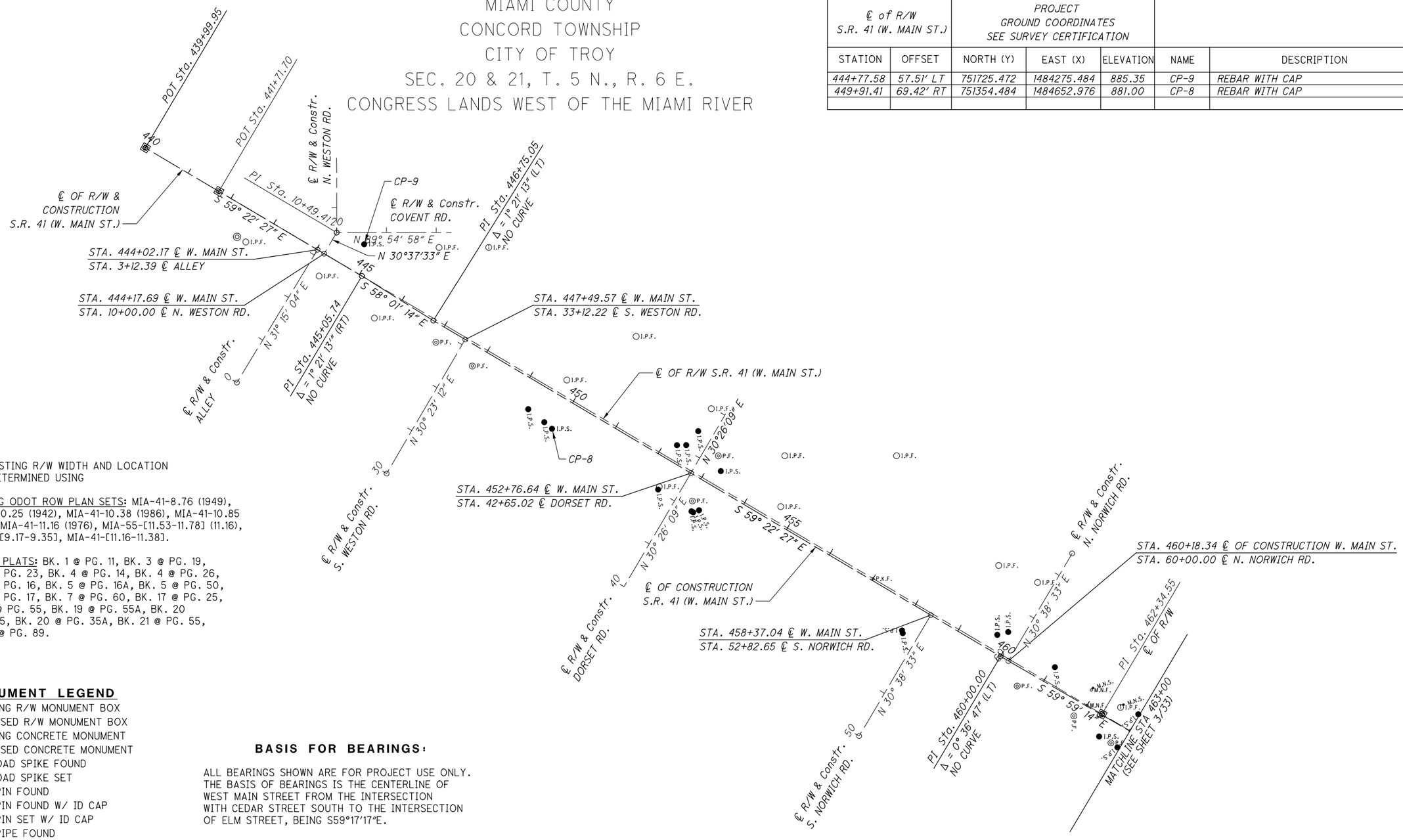

SURVEY CONTROL POINTS

℄ of R/W S.R. 41 (W. MAIN ST.)		PROJECT GROUND COORDINATES SEE SURVEY CERTIFICATION				
STATION	OFFSET	NORTH (Y)	EAST (X)	ELEVATION	NAME	DESCRIPTION
444+77.58	57.51' LT	751725.472	1484275.484	885.35	CP-9	REBAR WITH CAP
449+91.41	69.42' RT	751354.484	1484652.976	881.00	CP-8	REBAR WITH CAP

NOTE: THE EXISTING R/W WIDTH AND LOCATION WERE DETERMINED USING

EXISTING ODOT ROW PLAN SETS: MIA-41-8.76 (1949), MIA-41-10.25 (1942), MIA-41-10.38 (1986), MIA-41-10.85 (2004), MIA-41-11.16 (1976), MIA-55-[11.53-11.78] (11.16), MIA-75-[9.17-9.35], MIA-41-[11.16-11.38].

RECORD PLATS: BK. 1 @ PG. 11, BK. 3 @ PG. 19, BK. 3 @ PG. 23, BK. 4 @ PG. 14, BK. 4 @ PG. 26, BK. 5 @ PG. 16, BK. 5 @ PG. 16A, BK. 5 @ PG. 50, BK. 7 @ PG. 17, BK. 7 @ PG. 60, BK. 17 @ PG. 25, BK. 19 @ PG. 55, BK. 19 @ PG. 55A, BK. 20 @ PG. 35, BK. 20 @ PG. 35A, BK. 21 @ PG. 55, BK. 26 @ PG. 89.

MONUMENT LEGEND

- EXISTING R/W MONUMENT BOX
- PROPOSED R/W MONUMENT BOX
- EXISTING CONCRETE MONUMENT
- PROPOSED CONCRETE MONUMENT
- RAILROAD SPIKE FOUND
- RAILROAD SPIKE SET
- I.P.F. IRON PIN FOUND
- I.P.F. IRON PIN FOUND W/ ID CAP
- I.P.S. IRON PIN SET W/ ID CAP
- P.F. IRON PIPE FOUND
- P.S. IRON PIPE SET
- P.K.F. P.K. NAIL FOUND
- P.K.S. P.K. NAIL SET

BASIS FOR BEARINGS:

ALL BEARINGS SHOWN ARE FOR PROJECT USE ONLY. THE BASIS OF BEARINGS IS THE CENTERLINE OF WEST MAIN STREET FROM THE INTERSECTION WITH CEDAR STREET SOUTH TO THE INTERSECTION OF ELM STREET, BEING S59°17'17"E.

I, JEFFREY C. SPONTAK, P. S. have conducted a survey of the existing conditions for the Ohio Department of Transportation on JAN., FEB. & MAR. 2019. The results of that survey are contained herein. The horizontal coordinates expressed herein are based on the Ohio State Plane Coordinates System SOUTH Zone on NAD 83 2011 datum. The Project Coordinates (US Survey Feet) are relative to State Plane Grid Coordinates (Meters or US Survey Feet) by a Project Adjustment Factor of 0.99996789. As a part of this project I have reestablished the locations of the existing property lines and the existing centerline of Right of Way for property takes contained herein. As a part of this project I have established the proposed property lines, calculated the Gross Take, present roadway occupied (PRO), Net Take and Net Residue; as well as prepared the legal descriptions necessary to acquire the parcels as shown herein. As a part of this work I have set right of way monuments at the property corners, property line intersection, points along the right of way and/or angle points on the right of way, Section Corners and other points as shown herein. All of my work contained herein was conducted in accordance with Ohio Administrative Code 4733-37 commonly known as "Minimum Standards for Boundary Surveys in the State of Ohio" unless noted. The words I and my as used herein are to mean either myself or someone working under my direct supervision.

JEFFREY C. SPONTAK, Professional Land Surveyor 7856

Date: _____

SETTING OF ALL MONUMENTS SHALL BE PERFORMED BY A SURVEYOR REGISTERED IN THE STATE OF OHIO. THE MONUMENT ASSEMBLIES AND REFERENCE MONUMENTS WILL BE INSTALLED BY THE CONTRACTOR AT THE TIME OF CONSTRUCTION. THE IRON PIN AND CAP (WHEN REQUIRED) ARE TO BE INSTALLED BY THE CONTRACTOR'S SURVEYOR.

CHANGES OR ALTERATIONS TO THE LOCATION OF ANY MONUMENTS SHOWN IN THIS TABLE, REQUIRE PRIOR APPROVAL FROM THE DISTRICT REAL ESTATE ADMINISTRATOR OF THE OHIO DEPARTMENT OF TRANSPORTATION. IN THE EVENT THAT CHANGES OR ALTERATIONS ARE APPROVED, A REVISED CENTERLINE PLAT WITH THE NEW LOCATIONS SHALL BE RECORDED IN THE APPLICABLE COUNTY RECORDS AND THE OHIO DEPARTMENT OF TRANSPORTATION. SPECIFICATIONS FOR MONUMENT ASSEMBLIES, REFERENCE MONUMENTS AND RIGHT OF WAY MONUMENTS ARE SHOWN ON STANDARD CONSTRUCTION DRAWING RM-1.1.

RECEIVED _____, 20___
RECORDED _____, 20___
BOOK _____ PAGE _____
_____
COUNTY RECORDER

HORIZONTAL SCALE IN FEET
0 50 100 200

PID NO. 110253

R/W DESIGNER BJO
R/W REVIEWER JCS

CENTERLINE PLAT

MIA-41-10.32

S:\CIN\4300-4399\4354\004\Drawings\CAD\110253\row\sheets\10253RC001.dgn 10/1/2021 4:39:17 PM Allisonw

MIAMI COUNTY
CONCORD TOWNSHIP
CITY OF TROY
SEC. 20 & 21, T. 5 N., R. 6 E.
CONGRESS LANDS WEST OF THE MIAMI RIVER

SURVEY CONTROL POINTS

℄ of R/W & Constr. S.R. 41 (W. MAIN ST.)		PROJECT GROUND COORDINATES SEE SURVEY CERTIFICATION				
STATION	OFFSET	NORTH (Y)	EAST (X)	ELEVATION	NAME	DESCRIPTION
466+80.77	35.52' RT	750522.236	1486123.391	863.14	CP-7	REBAR WITH CAP
472+82.22	36.87' LT	750280.363	1486679.231	855.97	CP-6	REBAR WITH CAP

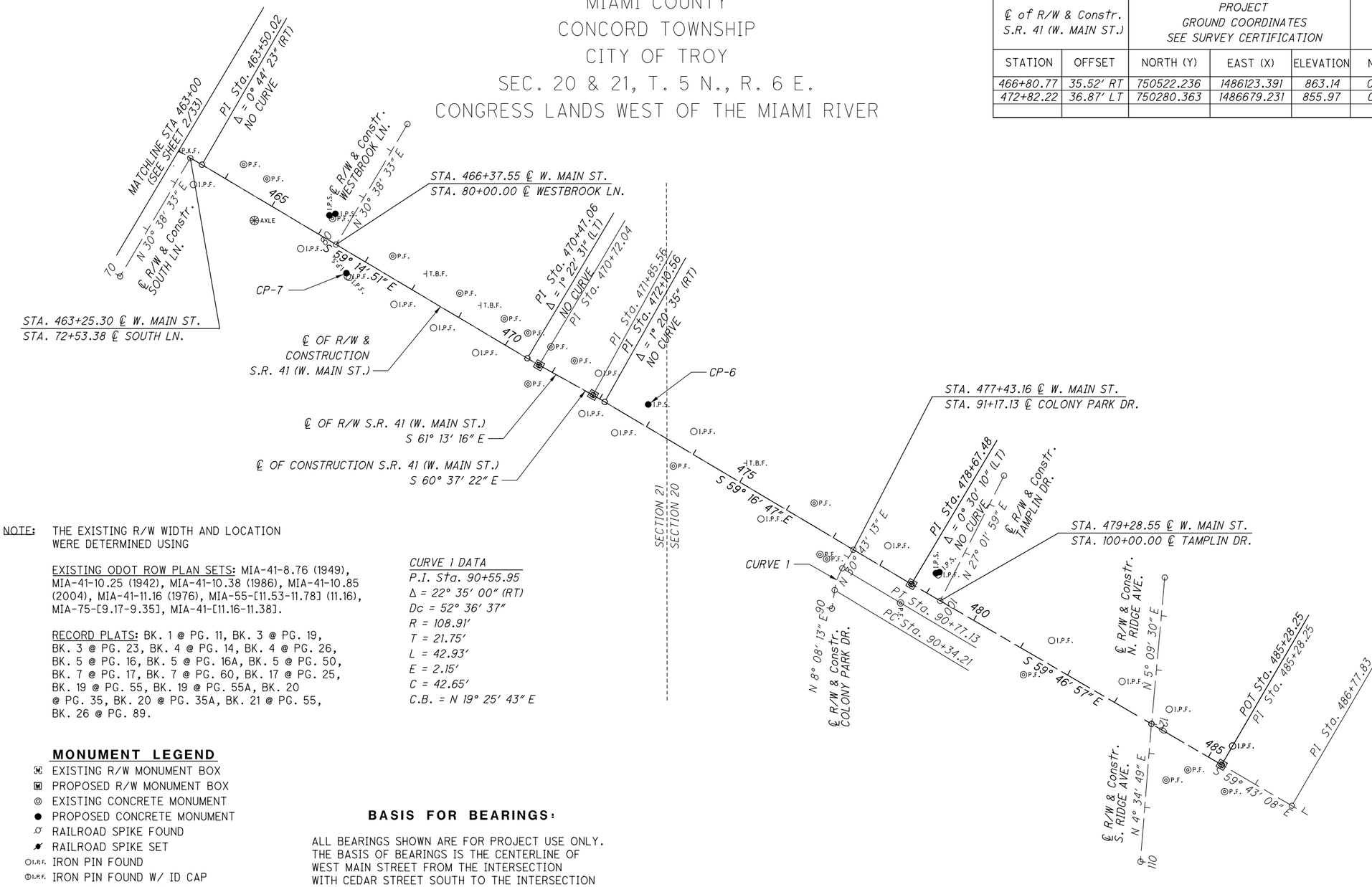

NOTE: THE EXISTING R/W WIDTH AND LOCATION WERE DETERMINED USING

EXISTING ODOT ROW PLAN SETS: MIA-41-8.76 (1949), MIA-41-10.25 (1942), MIA-41-10.38 (1986), MIA-41-10.85 (2004), MIA-41-11.16 (1976), MIA-55-[11.53-11.78] (11.16), MIA-75-[9.17-9.35], MIA-41-[11.16-11.38].

RECORD PLATS: BK. 1 @ PG. 11, BK. 3 @ PG. 19, BK. 3 @ PG. 23, BK. 4 @ PG. 14, BK. 4 @ PG. 26, BK. 5 @ PG. 16, BK. 5 @ PG. 16A, BK. 5 @ PG. 50, BK. 7 @ PG. 17, BK. 7 @ PG. 60, BK. 17 @ PG. 25, BK. 19 @ PG. 55, BK. 19 @ PG. 55A, BK. 20 @ PG. 35, BK. 20 @ PG. 35A, BK. 21 @ PG. 55, BK. 26 @ PG. 89.

CURVE 1 DATA
P.I. Sta. 90+55.95
Δ = 22° 35' 00" (RT)
Dc = 52° 36' 37"
R = 108.91'
T = 21.75'
L = 42.93'
E = 2.15'
C = 42.65'
C.B. = N 19° 25' 43" E

MONUMENT LEGEND

- EXISTING R/W MONUMENT BOX
- PROPOSED R/W MONUMENT BOX
- EXISTING CONCRETE MONUMENT
- PROPOSED CONCRETE MONUMENT
- RAILROAD SPIKE FOUND
- RAILROAD SPIKE SET
- I.P.F. IRON PIN FOUND
- I.P.F. IRON PIN FOUND W/ ID CAP
- I.P.S. IRON PIN SET W/ ID CAP
- P.F. IRON PIPE FOUND
- P.S. IRON PIPE SET
- P.K.F. P.K. NAIL FOUND
- P.K.S. P.K. NAIL SET

BASIS FOR BEARINGS:

ALL BEARINGS SHOWN ARE FOR PROJECT USE ONLY. THE BASIS OF BEARINGS IS THE CENTERLINE OF WEST MAIN STREET FROM THE INTERSECTION WITH CEDAR STREET SOUTH TO THE INTERSECTION OF ELM STREET, BEING S59°17'17"E.

I, JEFFREY C. SPONTAK, P. S. have conducted a survey of the existing conditions for the Ohio Department of Transportation on JAN., FEB. & MAR. 2019. The results of that survey are contained herein. The horizontal coordinates expressed herein are based on the Ohio State Plane Coordinates System SOUTH Zone on NAD 83 2011 datum. The Project Coordinates (US Survey Feet) are relative to State Plane Grid Coordinates (Meters or US Survey Feet) by a Project Adjustment Factor of 0.99996789. As a part of this project I have reestablished the locations of the existing property lines and the existing centerline of Right of Way for property takes contained herein. As a part of this project I have established the proposed property lines, calculated the Gross Take, present roadway occupied (PRO), Net Take and Net Residue; as well as prepared the legal descriptions necessary to acquire the parcels as shown herein. As a part of this work I have set right of way monuments at the property corners, property line intersection, points along the right of way and/or angle points on the right of way, Section Corners and other points as shown herein. All of my work contained herein was conducted in accordance with Ohio Administrative Code 4733-37 commonly known as "Minimum Standards for Boundary Surveys in the State of Ohio" unless noted. The words I and my as used herein are to mean either myself or someone working under my direct supervision.

SETTING OF ALL MONUMENTS SHALL BE PERFORMED BY A SURVEYOR REGISTERED IN THE STATE OF OHIO. THE MONUMENT ASSEMBLIES AND REFERENCE MONUMENTS WILL BE INSTALLED BY THE CONTRACTOR AT THE TIME OF CONSTRUCTION. THE IRON PIN AND CAP (WHEN REQUIRED) ARE TO BE INSTALLED BY THE CONTRACTOR'S SURVEYOR.

CHANGES OR ALTERATIONS TO THE LOCATION OF ANY MONUMENTS SHOWN IN THIS TABLE, REQUIRE PRIOR APPROVAL FROM THE DISTRICT REAL ESTATE ADMINISTRATOR OF THE OHIO DEPARTMENT OF TRANSPORTATION. IN THE EVENT THAT CHANGES OR ALTERATIONS ARE APPROVED, A REVISED CENTERLINE PLAT WITH THE NEW LOCATIONS SHALL BE RECORDED IN THE APPLICABLE COUNTY RECORDS AND THE OHIO DEPARTMENT OF TRANSPORTATION. SPECIFICATIONS FOR MONUMENT ASSEMBLIES, REFERENCE MONUMENTS AND RIGHT OF WAY MONUMENTS ARE SHOWN ON STANDARD CONSTRUCTION DRAWING RM-1.1.

RECEIVED _____, 20___
RECORDED _____, 20___
BOOK _____ PAGE _____
_____
COUNTY RECORDER

_____
JEFFREY C. SPONTAK, Professional Land Surveyor 7856

Date: _____

HORIZONTAL SCALE IN FEET
0 50 100 200

PID NO. 110253

R/W DESIGNER BJO
R/W REVIEWER JCS

CENTERLINE PLAT

MIA-41-10.32

S:\CIN\4300--4399\4354\004\Drawings\CAD\110253\row\sheets\10253RC002.dgn 10/1/2021 4:39:18 PM Allisonw

MIAMI COUNTY
CONCORD TOWNSHIP
CITY OF TROY
SEC. 20 & 21, T. 5 N., R. 6 E.
CONGRESS LANDS WEST OF THE MIAMI RIVER

MONUMENT TABLE

℄ of R/W & Constr. S.R. 41 (W. MAIN ST.)		PROJECT GROUND COORDINATES SEE SURVEY CERTIFICATION		MONUMENTS TO BE SET DURING CONSTRUCTION		R/W MON. EXPECTED TO BE DISTURBED	
STATION	OFFSET	NORTH (Y)	EAST (X)	MON. ASSY.	REF. MON.	R/W MON.	DESCRIPTION
439+99.95	℄	751919.275	1483835.220	1			MONUMENT ASSEMBLY
441+71.70	℄	751831.806	1483982.970	1			MONUMENT ASSEMBLY
445+05.79	℄	751661.619	1484270.453	1			MONUMENT ASSEMBLY
449+29.99	60.00' RT	751393.883	1484604.920		1	1	IRON PIN SET
449+71.00	66.00' RT	751367.825	1484637.157		1	1	IRON PIN SET
452+24.04	30.00' LT	751321.530	1484903.805		1	1	IRON PIN SET
452+36.84	66.00' RT	751232.398	1484865.918		1	1	IRON PIN SET
452+40.00	39.55' LT	751321.620	1484922.403		1	1	IRON PIN SET
452+46.37	76.06' LT	751348.644	1484952.713		1	1	IRON PIN SET
453+16.86	69.50' RT	751188.627	1484932.987		1	1	IRON PIN SET
453+20.86	69.50' RT	751182.333	1484941.921		1	1	IRON PIN SET
453+26.44	30.00' LT	751269.365	1484991.920		1	1	IRON PIN SET
453+28.82	60.00' RT	751190.735	1484948.125		1	1	IRON PIN SET
458+03.03	60.00' RT	750949.132	1485356.181		1	1	IRON PIN SET
458+07.02	64.00' RT	750943.653	1485357.584		1	1	IRON PIN SET
458+67.02	66.00' RT	750909.899	1485410.266		1	1	MAG NAIL SET
458+73.02	60.00' RT	750910.949	1485427.905		1	1	MAG NAIL SET
459+72.35	30.00' LT	750938.256	1485554.523		1	1	IRON PIN SET
459+88.36	46.00' LT	750944.558	1485573.422		1	1	IRON PIN SET
461+05.01	30.00' LT	750872.738	1485661.892		1	1	IRON PIN SET
461+92.22	33.17' LT	750831.338	1485740.567		1	1	MAG NAIL SET
462+52.60	41.50' RT	750713.707	1485741.407		1	1	IRON PIN SET
462+62.06	35.77' LT	750797.602	1485800.015		1	1	MAG NAIL SET
462+95.36	41.50' RT	750711.424	1485787.643		1	1	IRON PIN SET
462+97.44	37.13' LT	750785.254	1485834.280		1	1	IRON PIN SET
465+99.45	40.00' LT	750628.723	1486092.123		1	1	IRON PIN SET
466+07.44	48.00' LT	750631.515	1486103.076		1	1	IRON PIN SET
470+72.04	℄	750352.698	1486477.804	1			MONUMENT ASSEMBLY
471+85.56	℄	750298.044	1486577.306	1			MONUMENT ASSEMBLY
478+67.48	℄	749949.690	1487163.531	1			MONUMENT ASSEMBLY
478+96.29	40.00' LT	749969.756	1487208.557		1	1	IRON PIN SET
479+01.01	44.99' LT	749971.693	1487215.151		1	1	IRON PIN SET
485+28.25	℄	749617.136	1487734.518	1			MONUMENT ASSEMBLY
TOTAL CARRIED TO GENERAL SUMMARY SHEET				7	26	26	

EXISTING MONUMENT TABLE - SR 41

℄ of R/W S.R. 41 (W. MAIN ST.		PROJECT GROUND COORDINATES SEE SURVEY CERTIFICATION		
STATION	OFFSET	NORTH (Y)	EAST (X)	DESCRIPTION
442+49.86	60.15' RT	751740.227	1484019.587	CONCRETE MONUMENT
442+70.12	60.01' RT	751730.028	1484037.086	IRON PIN FOUND
444+31.76	44.00' RT	751661.459	1484184.338	IRON PIN FOUND
445+70.51	60.01' RT	751576.999	1484295.583	IRON PIN FOUND
447+01.61	38.82' RT	751528.449	1484419.185	IRON PIPE FOUND
447+88.94	42.56' RT	751480.744	1484492.431	IRON PIPE FOUND
449+66.89	29.92' LT	751452.461	1484682.479	IRON PIN FOUND
450+42.00	176.37' LT	751540.215	1484821.720	IRON PIN FOUND
452+36.04	59.91' RT	751238.044	1484868.327	IRON PIN FOUND
453+07.90	50.72' RT	751209.350	1484934.842	IRON PIPE FOUND
454+21.42	122.07' LT	751300.212	1485120.553	IRON PIN FOUND
454+66.53	29.93' LT	751197.937	1485112.434	IRON PIN FOUND
456+14.76	236.53' LT	751300.204	1485345.239	IRON PIN FOUND
457+00.06	0.08' RT	751053.154	1485298.100	PK NAIL FOUND
460+59.09	38.36' RT	750837.307	1485587.557	IRON PIPE FOUND
461+87.68	31.93' RT	750777.333	1485701.486	IRON PIPE FOUND
461+91.60	30.80' LT	750829.313	1485736.808	MAG NAIL FOUND
461+99.97	0.06' RT	750798.499	1485728.290	MAG NAIL FOUND
462+34.56	℄	750780.929	1485758.087	RAILROAD SPIKE FOUND
462+59.64	30.79' LT	750794.565	1485795.388	IRON PIN WITH CAP FOUND
462+79.60	40.44' RT	750723.137	1485776.118	IRON PIPE FOUND
463+00.00	0.31' LT	750747.732	1485814.486	PK NAIL FOUND
463+55.36	39.31' RT	750685.378	1485841.800	IRON PIN FOUND
464+15.76	39.53' LT	750722.243	1485934.022	IRON PIPE FOUND
464+65.99	38.51' LT	750695.680	1485976.669	IRON PIPE FOUND
464+85.54	38.92' RT	750619.147	1485953.877	AXLE FOUND
465+85.37	39.78' RT	750567.358	1486039.226	IRON PIN FOUND
466+07.46	37.61' LT	750520.102	1486097.782	IRON PIPE FOUND
466+85.40	39.94' RT	750516.076	1486125.106	IRON PIN FOUND
466+89.46	39.71' RT	750514.202	1486128.715	IRON PIN FOUND
467+38.08	34.87' LT	750553.433	1486208.634	IRON PIPE FOUND
467+85.45	40.09' RT	750464.787	1486211.016	IRON PIN FOUND
468+70.03	39.96' RT	750421.651	1486283.769	IRON PIN FOUND
468+79.09	39.21' LT	750485.056	1486332.038	IRON PIPE FOUND
469+60.03	39.87' RT	750375.711	1486361.159	IRON PIN FOUND
469+73.48	40.89' LT	750438.232	1486414.011	IRON PIPE FOUND
470+24.01	40.49' LT	750412.050	1486457.235	IRON PIPE FOUND
470+72.04	40.00' RT	750318.248	1486457.476	IRON PIPE FOUND
470+75.10	40.29' LT	750386.539	1486499.885	IRON PIPE FOUND
471+25.34	38.47' LT	750360.755	1486543.041	IRON PIPE FOUND
471+75.11	39.84' LT	750337.997	1486587.327	IRON PIN FOUND
471+84.22	39.97' RT	750263.657	1486556.890	IRON PIN FOUND
472+55.54	39.61' RT	750228.244	1486617.226	IRON PIN FOUND
473+79.50	36.96' LT	750230.746	1486762.913	IRON PIN FOUND
473+79.58	37.10' RT	750167.038	1486725.145	IRON PIPE FOUND
475+67.95	38.40' RT	750069.695	1486886.414	IRON PIN FOUND
476+37.33	36.70' LT	750098.811	1486984.423	IRON PIPE FOUND
476+94.66	39.13' RT	750004.329	1486994.975	IRON PIPE FOUND
477+09.48	39.97' RT	749996.045	1487007.283	IRON PIPE FOUND
477+93.97	38.72' LT	750020.529	1487120.113	IRON PIN FOUND
478+67.48	40.00' RT	749915.125	1487143.400	IRON PIPE FOUND
479+01.31	39.67' LT	749966.949	1487212.730	IRON PIN FOUND
481+29.55	40.38' RT	749782.898	1487369.671	IRON PIPE FOUND
481+42.74	40.17' LT	749845.871	1487421.602	IRON PIN FOUND
482+92.77	40.29' LT	749770.466	1487551.315	IRON PIN FOUND
483+93.47	39.76' LT	749719.324	1487638.058	IRON PIPE FOUND
484+53.97	75.96' RT	749588.876	1487632.103	IRON PIPE FOUND
484+79.02	39.53' RT	749607.753	1487672.083	IRON PIPE FOUND
485+28.21	40.00' LT	749651.722	1487754.613	IRON PIN FOUND
485+57.83	39.85' RT	749567.805	1487739.965	IRON PIPE FOUND

EXISTING MONUMENT TABLE - SIDE STREETS

℄ of R/W & Constr.			PROJECT GROUND COORDINATES SEE SURVEY CERTIFICATION		
STREET	STATION	OFFSET	NORTH (Y)	EAST (X)	DESCRIPTION
COVENT RD.	22+05.63	30.32' RT	751718.971	1484425.535	IRON PIN FOUND
COVENT RD.	22+30.57	30.32' RT	751719.113	1484525.433	IRON PIN WITH CAP FOUND
N. DORSET RD.	43+22.75	30.08' RT	751300.016	1484986.924	IRON PIPE FOUND
N. DORSET RD.	43+97.41	30.09' LT	751394.869	1484972.872	IRON PIN FOUND
NORWICH RD.	61+55.15	114.43' LT	751079.759	1485550.460	IRON PIN FOUND
NORWICH RD.	61+65.68	30.00' LT	751045.638	1485628.719	IRON PIN FOUND

SETTING OF ALL MONUMENTS SHALL BE PERFORMED BY A SURVEYOR REGISTERED IN THE STATE OF OHIO. THE MONUMENT ASSEMBLIES AND REFERENCE MONUMENTS WILL BE INSTALLED BY THE CONTRACTOR AT THE TIME OF CONSTRUCTION. THE IRON PIN AND CAP (WHEN REQUIRED) ARE TO BE INSTALLED BY THE CONTRACTOR'S SURVEYOR.

CHANGES OR ALTERATIONS TO THE LOCATION OF ANY MONUMENTS SHOWN IN THIS TABLE, REQUIRE PRIOR APPROVAL FROM THE DISTRICT REAL ESTATE ADMINISTRATOR OF THE OHIO DEPARTMENT OF TRANSPORTATION. IN THE EVENT THAT CHANGES OR ALTERATIONS ARE APPROVED, A REVISED CENTERLINE PLAT WITH THE NEW LOCATIONS SHALL BE RECORDED IN THE APPLICABLE COUNTY RECORDS AND THE OHIO DEPARTMENT OF TRANSPORTATION. SPECIFICATIONS FOR MONUMENT ASSEMBLIES, REFERENCE MONUMENTS AND RIGHT OF WAY MONUMENTS ARE SHOWN ON STANDARD CONSTRUCTION DRAWING RM-1.1.

RECEIVED _____, 20____
RECORDED _____, 20____
BOOK _____ PAGE _____
COUNTY RECORDER

HORIZONTAL SCALE IN FEET
0 50 100 200

PID NO. 110253

R/W DESIGNER BJO
R/W REVIEWER JCS

CENTERLINE PLAT

MIA-41-10.32

4 / 33

156 / 194

S:\CIN\4300-4399\4354\004\Drawings\CAD\110253\row\sheets\10253RC003.dgn 10/1/2021 4:39:19 PM Allisonw

MIAMI COUNTY
CONCORD TOWNSHIP
CITY OF TROY
SEC. 20 & 21, T. 5 N., R. 6 E.
CONGRESS LANDS WEST OF THE MIAMI RIVER

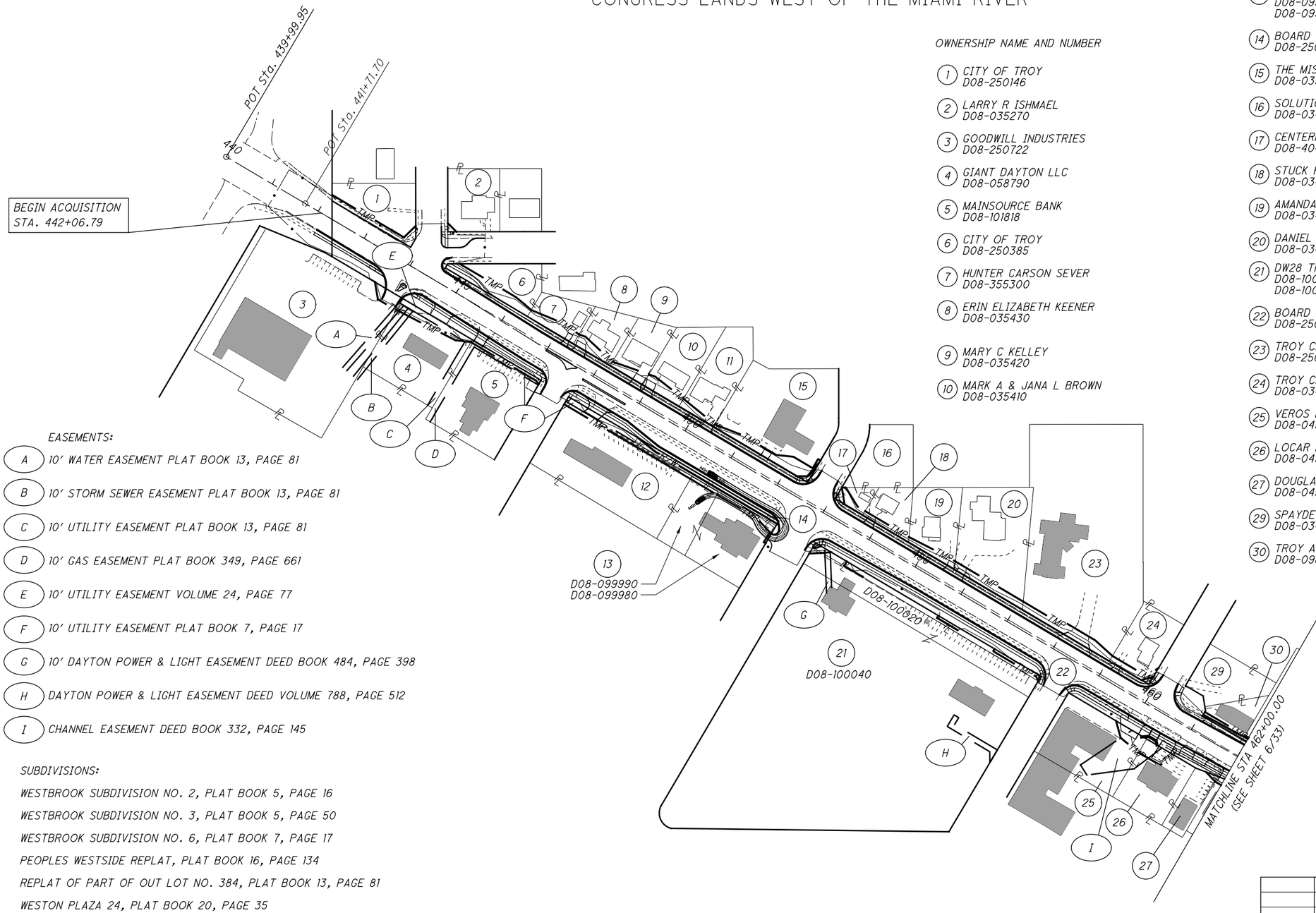

EASEMENTS:

- (A) *10′ WATER EASEMENT PLAT BOOK 13, PAGE 81*
- (B) *10′ STORM SEWER EASEMENT PLAT BOOK 13, PAGE 81*
- (C) *10′ UTILITY EASEMENT PLAT BOOK 13, PAGE 81*
- (D) *10′ GAS EASEMENT PLAT BOOK 349, PAGE 661*
- (E) *10′ UTILITY EASEMENT VOLUME 24, PAGE 77*
- (F) *10′ UTILITY EASEMENT PLAT BOOK 7, PAGE 17*
- (G) *10′ DAYTON POWER & LIGHT EASEMENT DEED BOOK 484, PAGE 398*
- (H) *DAYTON POWER & LIGHT EASEMENT DEED VOLUME 788, PAGE 512*
- (I) *CHANNEL EASEMENT DEED BOOK 332, PAGE 145*

SUBDIVISIONS:

WESTBROOK SUBDIVISION NO. 2, PLAT BOOK 5, PAGE 16

WESTBROOK SUBDIVISION NO. 3, PLAT BOOK 5, PAGE 50

WESTBROOK SUBDIVISION NO. 6, PLAT BOOK 7, PAGE 17

PEOPLES WESTSIDE REPLAT, PLAT BOOK 16, PAGE 134

REPLAT OF PART OF OUT LOT NO. 384, PLAT BOOK 13, PAGE 81

WESTON PLAZA 24, PLAT BOOK 20, PAGE 35

PLAT OF THE CITY OF TROY, OHIO
OUTLOTS: 315, 380, 384, 389, 390, 391, 392

INLOTS: 3410, 3411, 3417, 3418, 3422-3428, 3492-3494, 3501-3508, 4563, 4565, 4567, 7041, 7828, 9491, 10327

OWNERSHIP NAME AND NUMBER

1. *CITY OF TROY*
   D08-250146
2. *LARRY R ISHMAEL*
   D08-035270
3. *GOODWILL INDUSTRIES*
   D08-250722
4. *GIANT DAYTON LLC*
   D08-058790
5. *MAINSOURCE BANK*
   D08-101818
6. *CITY OF TROY*
   D08-250385
7. *HUNTER CARSON SEVER*
   D08-355300
8. *ERIN ELIZABETH KEENER*
   D08-035430
9. *MARY C KELLEY*
   D08-035420
10. *MARK A & JANA L BROWN*
    D08-035410

OWNERSHIP NAME AND NUMBER

11. *RUBY BURTON*
    D08-035400
12. *MCDONALDS REAL ESTATE COMPANY*
    D08-099900
13. *NATIONAL CITY BANK DAYTON*
    D08-099990
    D08-099980
14. *BOARD OF PARK COMMISSIONERS OF MIAMI COUNTY, OHIO*
    D08-250390
15. *THE MISSIONARY CHURCH EAST CENTRAL DISTRICT*
    D08-035382
16. *SOLUTIONS REAL ESTATE INVESTMENTS LLC*
    D08-034630
17. *CENTERPOINT ENERGY DELIVERY OF OHIO INC.*
    D08-404036
18. *STUCK PROPERTIES 1 LLC*
    D08-034640
19. *AMANDA L. WEHUNT*
    D08-034650
20. *DANIEL J. ANTHONY*
    D08-034660
21. *DW28 TROY OHIO LLC*
    D08-100020
    D08-100040
22. *BOARD OF PARK COMMISSIONERS OF MIAMI COUNTY, OHIO*
    D08-250392
23. *TROY CHURCH OF THE BRETHREN*
    D08-250480
24. *TROY CHURCH OF THE BRETHREN*
    D08-034530
25. *VEROS LLC*
    D08-045220
26. *LOCAR REAL ESTATES LLC*
    D08-045270
27. *DOUGLAS D. & REBECCA R. FRIEND*
    D08-045280
29. *SPAYDE PROPERTIES LLC*
    D08-034520
30. *TROY ALTMAN*
    D08-098540

REV. BY	DATE	DESCRIPTION

DATE COMPLETED

HORIZONTAL SCALE IN FEET
0 50 100 200

PID NO. 110253

R/W DESIGNER BJO
R/W REVIEWER JCS

PROPERTY MAP

MIA-41-10.32

S:\CIN\4300-4399\4354\004\Drawings\CAD\110253\row\sheets\10253RM001.dgn 10/1/2021 4:39:20 PM Allisonw

MIAMI COUNTY
CONCORD TOWNSHIP
CITY OF TROY
SEC. 20 & 21, T. 5 N., R. 6 E.
CONGRESS LANDS WEST OF THE MIAMI RIVER

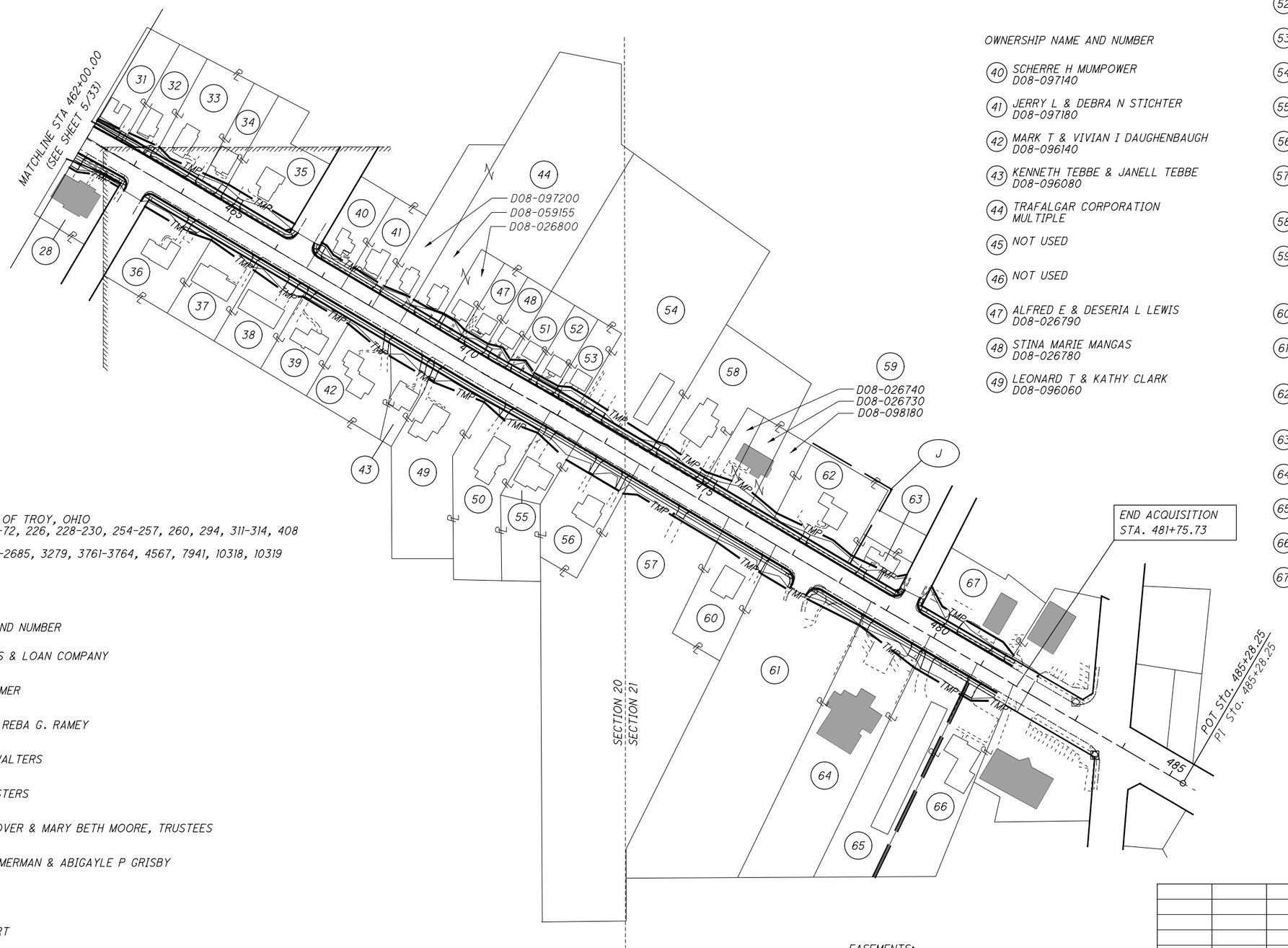

SUBDIVISIONS:

PLAT OF THE CITY OF TROY, OHIO
OUTLOTS: 70-72, 226, 228-230, 254-257, 260, 294, 311-314, 408

INLOTS: 2678-2685, 3279, 3761-3764, 4567, 7941, 10318, 10319

OWNERSHIP NAME AND NUMBER

(28) *THIRD SAVINGS & LOAN COMPANY*
D08-045300

(31) *DAVID R PLUMMER*
D08-098520

(32) *MICHAEL A. & REBA G. RAMEY*
D08-098500

(33) *JACQULYN L WALTERS*
D08-097120

(34) *MA ELENA MASTERS*
D08-098480

(35) *PAMELA D STOVER & MARY BETH MOORE, TRUSTEES*
D08-098460

(36) *JOSEPH T ZIMMERMAN & ABIGAYLE P GRISBY*
D08-096100

(37) *JEAN BISHOP*
D08-096160

(38) *CODY M SEVERT*
D08-096200

(39) *PAUL D WICK & ALEXIS M WICK*
D08-096120

OWNERSHIP NAME AND NUMBER

(40) *SCHERRE H MUMPOWER*
D08-097140

(41) *JERRY L & DEBRA N STICHTER*
D08-097180

(42) *MARK T & VIVIAN I DAUGHENBAUGH*
D08-096140

(43) *KENNETH TEBBE & JANELL TEBBE*
D08-096080

(44) *TRAFALGAR CORPORATION*
MULTIPLE

(45) *NOT USED*

(46) *NOT USED*

(47) *ALFRED E & DESERIA L LEWIS*
D08-026790

(48) *STINA MARIE MANGAS*
D08-026780

(49) *LEONARD T & KATHY CLARK*
D08-096060

OWNERSHIP NAME AND NUMBER

(50) *JERRY L WAGES & KRISTANN OTT*
D08-095980

(51) *WAGNER WRIGHT HUSKEY*
D08-026770

(52) *ROBERT EDWARD LONG III*
D08-026760

(53) *KIMBERLY MISHLER, TRUSTEE*
D08-026750

(54) *SEAJAY OHIO LLC*
D08-091500

(55) *RAYMOND L & PATRICIA A WIDENER*
D08-096000

(56) *SUSAN LENTZ FOGT*
D08-037910

(57) *BOARD OF PARK COMMISSIONERS OF MIAMI COUNTY, OHIO*
D08-250370

(58) *TIMOTHY E & TRACY A ARTZ*
D08-091520

(59) *E. JOSEPH LOWE M.D., TRUSTEE*
D08-026740
D08-026730
D08-098180

(60) *KATHRYN L ROETTER*
D08-037940

(61) *COLONY PARK DRIVE CONDO ASSOCIATES*
D08-091620

(62) *JOSHUA L & EVELYN MILLER*
D08-098100

(63) *DANIEL J ANTHONY*
D08-033290

(64) *CRON-CHENEY FUNERAL HOMES INC.*
D08-091560

(65) *WMAM HOLDINGS LLC*
D08-091600

(66) *R & T RENTALS LLC*
D08-091680

(67) *R C HEMM INVESTMENTS LLC*
D08-102044

EASEMENTS:

(J) *5' UTILITY EASEMENT PLAT BOOK 124, PAGE 3*

REV. BY	DATE	DESCRIPTION

DATE COMPLETED

HORIZONTAL SCALE IN FEET
0 50 100 200

PID NO. 110253

R/W DESIGNER BJO
R/W REVIEWER JCS

PROPERTY MAP

MIA-41-10.32

6 / 33

158 / 194

S:\CIN\4300--4399\4354\004\Drawings\CAD\110253\row\sheets\10253RM002.dgn 10/1/2021 4:39:20 PM Allisonw

TOTAL NUMBER OF :
63 OWNERSHIPS
78 PARCELS

0 TOTAL TAKES
0 OWNERSHIPS W/ STRUCTURES INVOLVED

NET RESIDUE = RECORD AREA - TOTAL PRO - NET TAKE

ALL AREAS IN ACRES

GRANTEE:
ALL RIGHT OF WAY ACQUIRED IN THE NAME OF
THE CITY OF TROY
UNLESS OTHERWISE SHOWN

PARCEL NO.	OWNER	SHEET NO.	OWNERS RECORD BOOK	OWNERS RECORD PAGE	AUDITOR'S PARCEL	RECORD AREA	TOTAL P.R.O.	GROSS TAKE	P.R.O. IN TAKE	NET TAKE	STRUC-TURE	NET RESIDUE LEFT	NET RESIDUE RIGHT	TYPE FUND	REMARKS	AS ACQUIRED BOOK	AS ACQUIRED PAGE
1-T	CITY OF TROY	16 & 17	DB 740	615	D08-250146	0.31	0.000	0.046	0.000	0.046	NO			LOCAL	TO COMPLETE GRADING FENCE (DO NOT DISTURB)		
2-T	LARRY R ISHMAEL	16 & 17	2020OR-03734		D08-035270	0.28	0.000	0.003	0.000	0.003	NO				TO CONSTRUCT PROPOSED WALK NET TAKE 129 SQUARE FEET		
3-T	GOODWILL INDUSTRIES	16 & 17	DB 737	375	D08-250722	2.042	0.000	0.029	0.000	0.029	NO				TO CONSTRUCT PROPOSED DRIVE AND WALK TO CONSTRUCT STORM SEWER PRIVATE SIGN (DND)		
4-T	GIANT DAYTON LLC	16 & 17	DB 790	803	D08-058790	0.516	0.000	0.065	0.000	0.065	NO				TO CONSTRUCT PROPOSED DRIVE AND WALK TO CONSTRUCT STORM SEWER RESTORE IMPACTED PAVEMENT AND CURB PRIVATE LANDSCAPING (MINIMIZE DISTURBANCE) PRIVATE LIGHT POLES (DND)		
5-T	MAINSOURCE BANK	16, 17, 18 & 19	DB 781	544	D08-101818	0.601	0.000	0.018	0.000	0.018	NO				TO CONSTRUCT PROPOSED DRIVE AND WALK TREES (DO NOT DISTURB) PARKING LOT (DO NOT DISTURB) PRIVATE LANDSCAPING (MINIMIZE DISTURBANCE)		
6-T	CITY OF TROY	16, 17, 18 & 19	DB 321	74	D08-250385	0.24	0.000	0.077	0.000	0.077	NO				TO CONSTRUCT PROPOSED WALK TREE (DO NOT DISTURB) FENCE (DND) PRIVATE LANDSCAPING (MINIMIZE DISTURBANCE)		
7-T	HUNTER CARSON SEVER	18 & 19	2013OR-00364		D08-355300	0.15	0.000	0.045	0.000	0.045	NO				TO CONSTRUCT PROPOSED DRIVE AND WALK TREE (DO NOT DISTURB) FENCE (DND) PRIVATE LANDSCAPING (MINIMIZE DISTURBANCE)		
8-T	ERIN ELIZABETH KEENER	18 & 19	2019OR-13532		D08-035430	0.17	0.000	0.030	0.000	0.030	NO				TO CONSTRUCT PROPOSED DRIVE AND WALK TREE (DO NOT DISTURB)		
9-T	MARY C KELLEY	18 & 19	2014OR-03123		D08-035420	0.18	0.000	0.025	0.000	0.025	NO			LOCAL	TO CONSTRUCT PROPOSED DRIVE AND WALK TREE (DO NOT DISTURB)		

LEGEND:
WD = WARRANTY DEED
SH = STANDARD HIGHWAY EASEMENT
SL = SLOPE EASEMENT
CH = CHANNEL EASEMENT
PR = PROPERTY RIGHT
T = TEMPORARY
U = UTILITY EASEMENT

NOTE: ALL TEMPORARY PARCELS TO BE OF 18 MONTH DURATION, UNLESS NOTED OTHERWISE IN REMARKS COLUMN.

NOTE: UNDER NO CIRCUMSTANCES ARE TEMPORARY EASEMENTS TO BE USED FOR STORAGE OF MATERIAL OR EQUIPMENT BY THE CONTRACTOR UNLESS NOTED OTHERWISE.

(c) = CALCULATED AREA

* DENOTES RIGHT OF WAY ENCROACHMENT

REV. BY	DATE	DESCRIPTION

FIELD REVIEW BY DATE:
OWNERSHIP VERIFIED BY DATE:
DATE COMPLETED

FEDERAL PROJECT NO. E200284
PID NO. 110253
STATE JOB NO.
R/W DESIGNER BJO
R/W REVIEWER JCS

SUMMARY OF ADDITIONAL RIGHT OF WAY

MIA-41-10.32

S:\CIN\4300--4399\4354\004\Drawings\CAD\110253\row\sheets\10253RS001.dgn 10/1/2021 4:39:21 PM Allisonw

NET RESIDUE = RECORD AREA - TOTAL PRO - NET TAKE

ALL AREAS IN ACRES

GRANTEE:
ALL RIGHT OF WAY ACQUIRED IN THE NAME OF
THE CITY OF TROY
UNLESS OTHERWISE SHOWN

PARCEL NO.	OWNER	SHEET NO.	OWNERS RECORD BOOK	OWNERS RECORD PAGE	AUDITOR'S PARCEL	RECORD AREA	TOTAL P.R.O.	GROSS TAKE	P.R.O. IN TAKE	NET TAKE	STRUC-TURE	NET RESIDUE LEFT	NET RESIDUE RIGHT	TYPE FUND	REMARKS	AS ACQUIRED BOOK	AS ACQUIRED PAGE
10-T	MARK A & JANA L BROWN	18 & 19	2016OR-	02569	D08-035410	0.27	0.000	0.038	0.000	0.038	NO			LOCAL	TO CONSTRUCT PROPOSED DRIVE AND WALK TREE (DND) PRIVATE LANDSCAPING (MINIMIZE DISTURBANCE)		
11-T	RUBY BURTON	18 & 19	2010OR-	06619	D08-035400	0.3	0.000	0.018	0.000	0.018	NO				TO CONSTRUCT PROPOSED DRIVE AND WALK DRIVEWAY CURB (DND)		
12-T	MCDONALDS REAL ESTATE COMPANY	18 & 19	2009OR-	18039 06619	D08-099900	0.9141	0.000	0.075	0.000	0.075	NO				TO CONSTRUCT PROPOSED DRIVE AND WALK PARKING LOT (DND) TREE (DND)		
13-T	NATIONAL CITY BANK, DAYTON	18, 19,	DB 642	240	D08-099990	0.248	0.000	0.008	0.000		NO				TO CONSTRUCT PROPOSED DRIVE AND WALK		
		20 & 21	DB 627	323	D08-099980	0.358	0.000	0.025	0.000						PARKING LOT (DO NOT DISTURB)		
	TOTAL					0.606		0.033		0.033					PRIVATE SIGN (DO NOT DISTURB) PRIVATE LANDSCAPING (MINIMIZE DISTURBANCE)		
14-WD	BOARD OF PARK COMMISSIONERS OF MIAMI COUNTY, OHIO	18, 19, 20 & 21	DB 434	140	D08-250390	0.07	0.000	0.039	0.000	0.039	NO		0.031		TO CONSTRUCT PROPOSED WALK TO CONSTRUCT TRAFFIC SIGNAL		
14-T						0.07	0.000	0.032	0.000	0.032	NO				TO CONSTRUCT PROPOSED WALK PRIVATE SIGN (DO NOT DISTURB) PRIVATE LANDSCAPING (MINIMIZE DISTURBANCE)		
15-WD	THE MISSIONARY CHURCH EAST CENTRAL DISTRICT	18, 19, 20 & 21	2013OR-	18743	D08-035382	0.81	0.000	0.006	0.000	0.006	NO		0.804		TO CONSTRUCT PROPOSED WALK TO CONSTRUCT TRAFFIC SIGNAL NET TAKE 256 SQUARE FEET		
15-T						0.81	0.000	0.076	0.000	0.076					TO CONSTRUCT PROPOSED WALK PRIVATE SIGN (DND) PRIVATE LANDSCAPING (MINIMIZE DISTURBANCE)		
16	SOLUTIONS REAL ESTATE INVESTMENTS LLC	20 & 21	2018OR-	14056	D08-034630	0.28	0.000	0.000	0.000	0.000	NO			LOCAL	NO TAKE		

LEGEND:
WD = WARRANTY DEED
SH = STANDARD HIGHWAY EASEMENT
SL = SLOPE EASEMENT
CH = CHANNEL EASEMENT
PR = PROPERTY RIGHT
T = TEMPORARY
U = UTILITY EASEMENT

NOTE: ALL TEMPORARY PARCELS TO BE OF 18 MONTH DURATION, UNLESS NOTED OTHERWISE IN REMARKS COLUMN.

NOTE: UNDER NO CIRCUMSTANCES ARE TEMPORARY EASEMENTS TO BE USED FOR STORAGE OF MATERIAL OR EQUIPMENT BY THE CONTRACTOR UNLESS NOTED OTHERWISE.

(c) = CALCULATED AREA

* DENOTES RIGHT OF WAY ENCROACHMENT

REV. BY	DATE	DESCRIPTION

FIELD REVIEW BY DATE:
OWNERSHIP VERIFIED BY DATE:
DATE COMPLETED

FEDERAL PROJECT NO. E200284
PID NO. 110253
STATE JOB NO.
R/W DESIGNER BJO
R/W REVIEWER JCS

SUMMARY OF ADDITIONAL RIGHT OF WAY

MIA-41-10.32

8 / 33

160
194

S:\CIN\4300--4399\4354\004\Drawings\CAD\110253\row\sheets\10253RS002.dgn 10/1/2021 4:39:21 PM Allisonw

NET RESIDUE = RECORD AREA - TOTAL PRO - NET TAKE

ALL AREAS IN ACRES

GRANTEE:
ALL RIGHT OF WAY ACQUIRED IN THE NAME OF
THE CITY OF TROY
UNLESS OTHERWISE SHOWN

PARCEL NO.	OWNER	SHEET NO.	OWNERS RECORD BOOK	OWNERS RECORD PAGE	AUDITOR'S PARCEL	RECORD AREA	TOTAL P.R.O.	GROSS TAKE	P.R.O. IN TAKE	NET TAKE	STRUC-TURE	NET RESIDUE LEFT	NET RESIDUE RIGHT	TYPE FUND	REMARKS	AS ACQUIRED BOOK	AS ACQUIRED PAGE
17-WD	VECTREN ENERGY DELIVERY	20 & 21	2016OR-16195		D08-404036	0.06	0.000	0.006	0.000	0.006	NO	0.054		LOCAL	TO CONSTRUCT PROPOSED WALK		
	OF OHIO INC.														TO CONSTRUCT TRAFFIC SIGNAL		
															NET TAKE 241 SQUARE FEET		
17-T						0.06	0.000	0.017	0.000	0.017	NO				TO CONSTRUCT PROPOSED WALK		
															TO REMOVE EXISTING TRAFFIC SIGNAL		
															REGULATOR STATION (DND)		
18-T	STUCK PROPERTIES I LLC	20 & 21	2019OR-01707		D08-034640	0.16	0.000	0.019	0.000	0.019	NO				TO CONSTRUCT PROPOSED DRIVE AND WALK		
19-T	AMANDA L. WEHUNT	20 & 21	2013OR-08157		D08-034650	0.28	0.000	0.026	0.000	0.026	NO				TO CONSTRUCT PROPOSED DRIVE AND WALK		
															PRIVATE WALL (DO NOT DISTURB)		
20-T	DANIEL J. ANTHONY	20, 21,	2020OR-04755		D08-034660	0.62	0.000	0.046	0.000	0.046	NO				TO CONSTRUCT PROPOSED DRIVE AND WALK		
		22 & 23													LANDSCAPING (DO NOT DISTURB)		
															PRIVATE WALL (DO NOT DISTURB)		
21-T	DW28 TROY OHIO LLC	20, 21,	DB 783	722	D08-100020	0.34	0.000	0.003	0.000	0.003	NO				TO CONSTRUCT PROPOSED WALK		
		22 & 23			D08-100040	4.9	0.000	0.000	0.000	0.000	NO				TREES (DO NOT DISTURB)		
	TOTAL					5.24	0.000	0.003	0.000	0.003					PRIVATE LANDSCAPING (DO NOT DISTURB)		
															PRIVATE SIGN AND WALL (DO NOT DISTURB)		
															PARKING LOT (DO NOT DISTURB)		
															NET TAKE 138 SQUARE FEET		
22-WD1	BOARD OF PARK COMMISSIONERS	20, 21,	DB 434	140	D08-250392	0.11	0.000	0.002	0.000	0.002					TO CONSTRUCT PROPOSED WALK		
	OF MIAMI COUNTY, OHIO	22 & 23													TO CONSTRUCT TRAFFIC SIGNAL		
22-WD2							0.000	0.0002	0.000	0.0002					PRIVATE LANDSCAPING (DO NOT DISTURB)		
															PARKING LOT (DO NOT DISTURB)		
	TOTAL					0.11	0.000	0.0022	0.000	0.0022			0.108		WD1 NET TAKE 76 SQUARE FEET		
															WD2 NET TAKE 8 SQUARE FEET		
22-T1						0.11	0.000	0.004	0.000	0.004					TO CONSTRUCT PROPOSED WALK		
															NET TAKE 182 SQUARE FEET		
22-T2						0.11	0.000	0.009	0.000	0.009				LOCAL	TO INSTALL RELOCATED		
															BOARD OF COMMISSIONERS SIGN		

LEGEND:
WD = WARRANTY DEED
SH = STANDARD HIGHWAY EASEMENT
SL = SLOPE EASEMENT
CH = CHANNEL EASEMENT
PR = PROPERTY RIGHT
T = TEMPORARY
U = UTILITY EASEMENT

NOTE: ALL TEMPORARY PARCELS TO BE OF 18 MONTH DURATION, UNLESS NOTED OTHERWISE IN REMARKS COLUMN.

NOTE: UNDER NO CIRCUMSTANCES ARE TEMPORARY EASEMENTS TO BE USED FOR STORAGE OF MATERIAL OR EQUIPMENT BY THE CONTRACTOR UNLESS NOTED OTHERWISE.

(c) = CALCULATED AREA

* DENOTES RIGHT OF WAY ENCROACHMENT

REV. BY	DATE	DESCRIPTION

FIELD REVIEW BY DATE:
OWNERSHIP VERIFIED BY DATE:
DATE COMPLETED

FEDERAL PROJECT NO. E200284
PID NO. 110253
STATE JOB NO.
R/W DESIGNER BJO
R/W REVIEWER JCS

SUMMARY OF ADDITIONAL RIGHT OF WAY

MIA-41-10.32

9 / 33

161
194

S:\CIN\4300--4399\4354\004\Drawings\CAD\110253\row\sheets\10253RS003.dgn 10/1/2021 4:39:22 PM Allisonw

NET RESIDUE = RECORD AREA - TOTAL PRO - NET TAKE

ALL AREAS IN ACRES

GRANTEE:
ALL RIGHT OF WAY ACQUIRED IN THE NAME OF
THE CITY OF TROY
UNLESS OTHERWISE SHOWN

PARCEL NO.	OWNER	SHEET NO.	OWNERS RECORD BOOK	OWNERS RECORD PAGE	AUDITOR'S PARCEL	RECORD AREA	TOTAL P.R.O.	GROSS TAKE	P.R.O. IN TAKE	NET TAKE	STRUC-TURE	NET RESIDUE LEFT	NET RESIDUE RIGHT	TYPE FUND	REMARKS	AS ACQUIRED BOOK	AS ACQUIRED PAGE
22-T3	BOARD OF PARK COMMISSIONERS OF MIAMI COUNTY, OHIO	20, 21, 22 & 23	DB 434	140	D08-250392	0.11	0.000	0.006	0.000	0.006	NO			LOCAL	TO CONSTRUCT STORM SEWER PRIVATE LANDSCAPING (MINIMIZE DISTURBANCE)		
22-T4						0.11	0.000	0.012	0.000	0.012	NO				TO CONSTRUCT PROPOSED WALK PRIVATE LANDSCAPING (DO NOT DISTURB) PARKING LOT (DO NOT DISTURB) FLAG POLE (DO NOT DISTURB)		
23-T	TROY CHURCH OF THE BRETHREN	22 & 23	DB 282	310	D08-250480	1.67	0.000	0.071	0.000	0.071	NO				TO CONSTRUCT PROPOSED DRIVE AND WALK TO CONSTRUCT STORM SEWER FENCE (DO NOT DISTURB)		
24-WD	TROY CHURCH OF THE BRETHREN	22 & 23	DB 368	62	D08-034530	0.26	0.000	0.003	0.000	0.003	NO	0.257			TO CONSTRUCT PROPOSED WALK NET TAKE 128 SQUARE FEET		
24-T						0.26	0.000	0.022	0.000	0.022	NO				TO CONSTRUCT PROPOSED DRIVE AND WALK		
25-T	VEROS LLC	22 & 23	2011OR-05817		D08-045220	0.51	0.000	0.017	0.000	0.0170	NO				TO CONSTRUCT PROPOSED DRIVE		
25-U						0.51	0.000	0.15	0.000	0.150	NO				TO CONSTRUCT AND MAINTAIN CULVERT AND GRADING		
26-T	LOCAR REAL ESTATE LLC	22, 23, 24 & 25	2018OR-05261		D08-045270	0.32	0.000	0.016	0.000	0.016	NO				TO COMPLETE GRADING TO CONSTRUCT PROPOSED DRIVE		
26-U						0.32	0.000	0.020	0.000	0.020	NO				TO CONSTRUCT AND MAINTAIN CULVERT AND GRADING		
27-T	DOUGLAS D. & REBECCA R. FRIEND	24 & 25	DB 589	569	D08-045280	0.14	0.000	0.003	0.000	0.003	NO				TO CONSTRUCT PROPOSED DRIVE NET TAKE 130 SQUARE FEET		
28-WD	THIRD SAVINGS & LOAN COMPANY	24 & 25	DB 545	23	D08-045300	0.36	0.000	0.001	0.000	0.001	NO		0.359		TO CONSTRUCT PROPOSED WALK NET TAKE 58 SQUARE FEET		
28-T						0.36	0.000	0.025	0.000	0.025	NO			LOCAL	TO CONSTRUCT PROPOSED DRIVE AND WALK PRIVATE SIGNS (TO BE RELOCATED) TO CONSTRUCT STORM SEWER PRIVATE SIGN (DND) CONCRETE STEPS (TO REMAIN)		

LEGEND:
WD = WARRANTY DEED
SH = STANDARD HIGHWAY EASEMENT
SL = SLOPE EASEMENT
CH = CHANNEL EASEMENT
PR = PROPERTY RIGHT
T = TEMPORARY
U = UTILITY EASEMENT

NOTE: ALL TEMPORARY PARCELS TO BE OF 18 MONTH DURATION, UNLESS NOTED OTHERWISE IN REMARKS COLUMN.

NOTE: UNDER NO CIRCUMSTANCES ARE TEMPORARY EASEMENTS TO BE USED FOR STORAGE OF MATERIAL OR EQUIPMENT BY THE CONTRACTOR UNLESS NOTED OTHERWISE.

(c) = CALCULATED AREA

* DENOTES RIGHT OF WAY ENCROACHMENT

REV. BY	DATE	DESCRIPTION

FIELD REVIEW BY DATE:
OWNERSHIP VERIFIED BY DATE:
DATE COMPLETED

FEDERAL PROJECT NO. E200284
PID NO. 110253
STATE JOB NO.
R/W DESIGNER BJO
R/W REVIEWER JCS

SUMMARY OF ADDITIONAL RIGHT OF WAY

MIA-41-10.32

S:\CIN\4300--4399\4354\004\Drawings\CAD\110253\row\sheets\10253RS004.dgn 10/1/2021 4:39:22 PM Allisonw

NET RESIDUE = RECORD AREA - TOTAL PRO - NET TAKE

ALL AREAS IN ACRES

GRANTEE:
ALL RIGHT OF WAY ACQUIRED IN THE NAME OF
THE CITY OF TROY
UNLESS OTHERWISE SHOWN

PARCEL NO.	OWNER	SHEET NO.	OWNERS RECORD BOOK	OWNERS RECORD PAGE	AUDITOR'S PARCEL	RECORD AREA	TOTAL P.R.O.	GROSS TAKE	P.R.O. IN TAKE	NET TAKE	STRUCTURE	NET RESIDUE LEFT	NET RESIDUE RIGHT	TYPE FUND	REMARKS	AS ACQUIRED BOOK	AS ACQUIRED PAGE
29	SPAYDE PROPERTIES LLC	22, 23, 24 & 25	2015OR-02675	2015OR-02678	D08-034520	0.277	0.000	0.000	0.000	0.000	NO			LOCAL	NO TAKE		
30-WD	TROY ALTMAN	24 & 25	2019OR-15550		D08-098540	0.136	0.000	0.009	0.000	0.009	NO	0.127			TO CONSTRUCT PROPOSED WALK NET TAKE 393 SQUARE FEET		
30-T						0.136	0.000	0.009	0.000	0.009	NO				TO CONSTRUCT PROPOSED DRIVE AND WALK NET TAKE 387 SQUARE FEET		
31-WD	DAVID R PLUMMER	24 & 25	2020OR-01046		D08-098520	0.31	0.000	0.012	0.000	0.012	NO	0.298			TO CONSTRUCT PROPOSED WALK PAVER WALK (DO NOT DISTURB)		
31-T						0.31	0.000	0.009	0.000	0.009	NO				TO CONSTRUCT PROPOSED DRIVE AND WALK PAVER WALK (DO NOT DISTURB) NET TAKE 379 SQUARE FEET		
32-WD	MICHAEL A. & REBA G. RAMEY	24 & 25	2016OR-01415		08-098500	0.255	0.000	0.007	0.000	0.007	NO	0.248			TO CONSTRUCT PROPOSED WALK NET TAKE 285 SQUARE FEET		
32-T						0.255	0.000	0.014	0.000	0.014	NO				TO CONSTRUCT PROPOSED DRIVE AND WALK		
33-T	JACQULYN L WALTERS	24 & 25	2018OR-12063		D08-097120	0.46	0.000	0.021	0.000	0.021	NO				TO CONSTRUCT PROPOSED DRIVE AND WALK TREE (DO NOT DISTURB)		
34-T	MA ELENA MASTERS	24 & 25	2019OR-06246		D08-098480	0.235	0.000	0.017	0.000	0.017	NO				TO CONSTRUCT PROPOSED DRIVE AND WALK		
35-WD	PAMELA D. STOVER & MARY BETH MOORE TRUSTEES	24, 25, 26 & 27	2010OR-11806		D08-098460	0.47	0.000	0.001	0.000	0.001	NO	0.469		LOCAL	TO CONSTRUCT PROPOSED WALK NET TAKE 32 SQUARE FEET		

LEGEND:
WD = WARRANTY DEED
SH = STANDARD HIGHWAY EASEMENT
SL = SLOPE EASEMENT
CH = CHANNEL EASEMENT
PR = PROPERTY RIGHT
T = TEMPORARY
U = UTILITY EASEMENT

NOTE: ALL TEMPORARY PARCELS TO BE OF 18 MONTH DURATION, UNLESS NOTED OTHERWISE IN REMARKS COLUMN.

NOTE: UNDER NO CIRCUMSTANCES ARE TEMPORARY EASEMENTS TO BE USED FOR STORAGE OF MATERIAL OR EQUIPMENT BY THE CONTRACTOR UNLESS NOTED OTHERWISE.

(c) = CALCULATED AREA

* DENOTES RIGHT OF WAY ENCROACHMENT

REV. BY	DATE	DESCRIPTION

FIELD REVIEW BY DATE:
OWNERSHIP VERIFIED BY DATE:
DATE COMPLETED

FEDERAL PROJECT NO. E200284
PID NO. 110253
STATE JOB NO.
R/W DESIGNER BJO
R/W REVIEWER JCS

SUMMARY OF ADDITIONAL RIGHT OF WAY

MIA-41-10.32

S:\CIN\4300--4399\4354\004\Drawings\CAD\110253\row\sheets\10253RS005.dgn 10/1/2021 4:39:22 PM Allisonw

NET RESIDUE = RECORD AREA - TOTAL PRO - NET TAKE

ALL AREAS IN ACRES

GRANTEE:
ALL RIGHT OF WAY ACQUIRED IN THE NAME OF
THE CITY OF TROY
UNLESS OTHERWISE SHOWN

PARCEL NO.	OWNER	SHEET NO.	OWNERS RECORD BOOK	OWNERS RECORD PAGE	AUDITOR'S PARCEL	RECORD AREA	TOTAL P.R.O.	GROSS TAKE	P.R.O. IN TAKE	NET TAKE	STRUCTURE	NET RESIDUE LEFT	NET RESIDUE RIGHT	TYPE FUND	REMARKS	AS ACQUIRED BOOK	AS ACQUIRED PAGE
35-T	PAMELA D. STOVER & MARY BETH MOORE TRUSTEES	24, 25, 26 & 27	2010OR-11806		D08-098460	0.47	0.000	0.060	0.000	0.060	NO			LOCAL	TO CONSTRUCT PROPOSED DRIVE AND WALK TO COMPLETE GRADING		
36-T	JOSEPH T. ZIMMERMAN & ABIGAYLE P. GRISBY	24 & 25	2016OR-13385		D08-096100	0.48	0.000	0.039	0.000	0.039	NO				TO CONSTRUCT PROPOSED DRIVE AND WALK TREE (DO NOT DISTURB)		
37-T	JEAN BISHOP	24 & 25	2016OR-00525		D08-096160	0.37	0.000	0.020	0.000	0.020	NO				TO CONSTRUCT PROPOSED DRIVE AND WALK		
38-T	CODY M. SEVERT	24, 25, 26 & 27	2019OR-06256		D08-096200	0.37	0.000	0.035	0.000	0.035	NO				TO CONSTRUCT PROPOSED DRIVE AND WALK		
39-T	PAUL D. WICK & ALEXIS M. WICK	26 & 27	2015OR-03417		D08-096120	0.37	0.000	0.019	0.000	0.019	NO				TO CONSTRUCT PROPOSED DRIVE AND WALK FLAGPOLE (DO NOT DISTURB)		
40-SH	SCHERRE H. MUMPOWER	26 & 27	2012OR-08702		D08-097140	0.330 (c)	0.067	0.001	0.000	0.001	NO	0.262			TO CONSTRUCT PROPOSED WALK NET TAKE 32 SQUARE FEET		
40-T						0.330 (c	0.067	0.013	0.000	0.013	NO				TO CONSTRUCT PROPOSED DRIVE AND WALK TO CONSTRUCT PROPOSED CONCRETE STEPS		
41-T	JERRY L. & DEBRA N. STICHTER	26 & 27	DB 752	806	D08-097180	0.295 (c)	0.061	0.008	0.000	0.008	NO			LOCAL	TO CONSTRUCT PROPOSED DRIVE AND WALK PRIVATE LANDSCAPING AND WALL (MINIMIZE DISTURBANCE) NET TAKE 326 SQUARE FEET		

LEGEND:
WD = WARRANTY DEED
SH = STANDARD HIGHWAY EASEMENT
SL = SLOPE EASEMENT
CH = CHANNEL EASEMENT
PR = PROPERTY RIGHT
T = TEMPORARY
U = UTILITY EASEMENT

NOTE: ALL TEMPORARY PARCELS TO BE OF 18 MONTH DURATION, UNLESS NOTED OTHERWISE IN REMARKS COLUMN.

NOTE: UNDER NO CIRCUMSTANCES ARE TEMPORARY EASEMENTS TO BE USED FOR STORAGE OF MATERIAL OR EQUIPMENT BY THE CONTRACTOR UNLESS NOTED OTHERWISE.

(c) = CALCULATED AREA

* DENOTES RIGHT OF WAY ENCROACHMENT

REV. BY	DATE	DESCRIPTION

FIELD REVIEW BY DATE:
OWNERSHIP VERIFIED BY DATE:
DATE COMPLETED

FEDERAL PROJECT NO. E200284
PID NO. 110253
STATE JOB NO.
R/W DESIGNER BJO
R/W REVIEWER JCS

SUMMARY OF ADDITIONAL RIGHT OF WAY

MIA-41-10.32

12 / 33

164
194

S:\CIN\4300--4399\4354\004\Drawings\CAD\110253\row\sheets\10253RS006.dgn 10/1/2021 4:39:23 PM Allisonw

NET RESIDUE = RECORD AREA - TOTAL PRO - NET TAKE

ALL AREAS IN ACRES

GRANTEE:
ALL RIGHT OF WAY ACQUIRED IN THE NAME OF
THE CITY OF TROY
UNLESS OTHERWISE SHOWN

PARCEL NO.	OWNER	SHEET NO.	OWNERS RECORD BOOK	OWNERS RECORD PAGE	AUDITOR'S PARCEL	RECORD AREA	TOTAL P.R.O.	GROSS TAKE	P.R.O. IN TAKE	NET TAKE	STRUC-TURE	NET RESIDUE LEFT	NET RESIDUE RIGHT	TYPE FUND	REMARKS	AS ACQUIRED BOOK	AS ACQUIRED PAGE
42-T	MARK T. & VIVIAN I. DAUGHENBAUGH	26 & 27	2017OR-10627		D08-096140	0.4	0.000	0.032	0.000	0.032	NO			LOCAL	TO CONSTRUCT PROPOSED DRIVE AND WALK		
43-T	KEENETH TEBBE & JANELL TEBBE	26 & 27	2017OR-11053		D08-096080	0.199 (c)	0.000	0.040	0.000	0.040	NO				TO CONSTRUCT PROPOSED DRIVE AND WALK TREE (DO NOT DISTURB)		
44-T	TRAFALGAR CORPORATION	26 & 27	DB 739	701	D08-097200	0.2	0.000	0.012	0.000	0.012	NO				TO CONSTRUCT PROPOSED DRIVE AND WALK		
			DB 605	175	D08-059155	2.416	0.000	0.018	0.000	0.018	NO				PRIVATE LANDSCAPING (MINIMIZE DISTURBANCE)		
					D08-026800	0.17	0.000	0.017	0.000	0.017	NO						
	TOTAL					2.786	0.000	0.047	0.000	0.047							
47-T	ALFRED E & DESERIA L LEWIS	26 & 27	DB 602	777	D08-026790	0.17	0.000	0.012	0.000	0.012	NO				TO CONSTRUCT PROPOSED DRIVE AND WALK		
48-T	STINA MARIE MANGAS	26 & 27	2019OR-00414		D08-026780	0.17	0.000	0.016	0.000	0.016	NO				TO CONSTRUCT PROPOSED DRIVE AND WALK TO COMPLETE GRADING		
49-T	LEONARD T & KATHY CLARK	26 & 27	DB 633	309	D08-096060	0.72	0.000	0.034	0.000		NO				TO CONSTRUCT PROPOSED DRIVE AND WALK PRIVATE LANDSCAPING (MINIMIZE DISTURBANCE)		
50-T	JERRY L WAGES & KRISTANN OTT	26, 27, 28 & 29	2018OR-01549		D08-095980	0.85	0.000	0.028	0.000		NO			LOCAL	TO CONSTRUCT PROPOSED DRIVE AND WALK TREE (DND)		

LEGEND:
WD = WARRANTY DEED
SH = STANDARD HIGHWAY EASEMENT
SL = SLOPE EASEMENT
CH = CHANNEL EASEMENT
PR = PROPERTY RIGHT
T = TEMPORARY
U = UTILITY EASEMENT

NOTE: ALL TEMPORARY PARCELS TO BE OF 18 MONTH DURATION, UNLESS NOTED OTHERWISE IN REMARKS COLUMN.

NOTE: UNDER NO CIRCUMSTANCES ARE TEMPORARY EASEMENTS TO BE USED FOR STORAGE OF MATERIAL OR EQUIPMENT BY THE CONTRACTOR UNLESS NOTED OTHERWISE.

(c) = CALCULATED AREA

* DENOTES RIGHT OF WAY ENCROACHMENT

REV. BY	DATE	DESCRIPTION

FIELD REVIEW BY DATE:
OWNERSHIP VERIFIED BY DATE:
DATE COMPLETED

FEDERAL PROJECT NO. E200284
PID NO. 110253
STATE JOB NO.
R/W DESIGNER BJO
R/W REVIEWER JCS

SUMMARY OF ADDITIONAL RIGHT OF WAY

MIA-41-10.32

13 / 33

165
194

S:\CIN\4300--4399\4354\004\Drawings\CAD\110253\row\sheets\10253RS007.dgn 10/1/2021 4:39:23 PM Allisonw

NET RESIDUE = RECORD AREA - TOTAL PRO - NET TAKE

ALL AREAS IN ACRES

GRANTEE:
ALL RIGHT OF WAY ACQUIRED IN THE NAME OF
THE CITY OF TROY
UNLESS OTHERWISE SHOWN

PARCEL NO.	OWNER	SHEET NO.	OWNERS RECORD BOOK	OWNERS RECORD PAGE	AUDITOR'S PARCEL	RECORD AREA	TOTAL P.R.O.	GROSS TAKE	P.R.O. IN TAKE	NET TAKE	STRUCTURE	NET RESIDUE LEFT	NET RESIDUE RIGHT	TYPE FUND	REMARKS	AS ACQUIRED BOOK	AS ACQUIRED PAGE
51-T	WAGNER WRIGHT HUSKEY	26, 27, 28 & 29	2018OR-	08213	D08-026770	0.17	0.000	0.015	0.000		NO			LOCAL	TO CONSTRUCT PROPOSED DRIVE AND WALK TO COMPLETE GRADING		
52-T	ROBERT EDWARD LONG III	28 & 29	2014OR-	01078	D08-026760	0.17	0.000	0.008	0.000		NO				TO CONSTRUCT PROPOSED DRIVE AND WALK NET TAKE 343 SQUARE FEET		
53-T	KIMBERLY MISHLER, TRUSTEE	28 & 29	2020OR-	05486	D08-026750	0.17	0.000	0.017	0.000	0.017	NO				TO CONSTRUCT PROPOSED DRIVE AND WALK TO COMPLETE GRADING TREE (DND)		
54-T	SEAJAY OHIO LLC	28 & 29	DB 728	147	D08-091500	2.47	0.000	0.050	0.000	0.050	NO				TO CONSTRUCT PROPOSED DRIVE AND WALK PRIVATE LANDSCAPING (MINIMIZE DISTURBANCE) TREE (DO NOT DISTURB) FLAG POLE (DO NOT DISTURB)		
55-T	RAYMOND L & PATRICIA A WIDENER	28 & 29	DB 532	730	D08-096000	0.295 (c)	0.065	0.023	0.000	0.023	NO				TO CONSTRUCT PROPOSED DRIVE AND WALK		
56-T	SUSAN LENTZ FOGT	28 & 29	DB 593	650 & 651	D08-037910	0.47	0.000	0.061	0.000	0.061	NO				TO CONSTRUCT PROPOSED DRIVE AND WALK PRIVATE LANDSCAPING (MINIMIZE DISTURBANCE) TREE (DO NOT DISTURB)		
57-T	BOARD OF PARK COMMISSIONERS OF MIAMI COUNTY, OHIO	28 & 29	DB 425	293	D08-250370	3.07	0.000	0.050	0.000	0.050	NO				TO CONSTRUCT PROPOSED DRIVE AND WALK PRIVATE SIGN (DO NOT DISTURB) REMOVE & RESET LANDSCAPING BLOCKS TREES (DO NOT DISTURB) PRIVATE LANDSCAPING (MINIMIZE DISTURBANCE)		
58-T	TIMOTHY E. & TRACY A. ARTZ	28 & 29	2013OR-	11752	D08-091520	0.752	0.000	0.031	0.000	0.031	NO				TO CONSTRUCT PROPOSED DRIVE AND WALK TO COMPLETE GRADING		
59-T	E. JOSEPH LOWE M.D. TRUSTEE	28, 29, 30 & 31	DB 735	401	D08-026740	0.15	0.000	0.016	0.000	0.016	NO			LOCAL	TO CONSTRUCT PROPOSED DRIVE AND WALK		
					D08-026730	0.17	0.000	0.025	0.000	0.025	NO				TO COMPLETE GRADING		
					D08-098180	0.17	0.000	0.017	0.000	0.017	NO				REMOVE & RESET LANDSCAPING BLOCKS PRIVATE LANDSCAPING (MINIMIZE DISTURBANCE)		
	TOTAL					0.49	0.000	0.058	0.000	0.058							

LEGEND:
WD = WARRANTY DEED
SH = STANDARD HIGHWAY EASEMENT
SL = SLOPE EASEMENT
CH = CHANNEL EASEMENT
PR = PROPERTY RIGHT
T = TEMPORARY
U = UTILITY EASEMENT

NOTE: ALL TEMPORARY PARCELS TO BE OF 18 MONTH DURATION, UNLESS NOTED OTHERWISE IN REMARKS COLUMN.

NOTE: UNDER NO CIRCUMSTANCES ARE TEMPORARY EASEMENTS TO BE USED FOR STORAGE OF MATERIAL OR EQUIPMENT BY THE CONTRACTOR UNLESS NOTED OTHERWISE.

(c) = CALCULATED AREA

* DENOTES RIGHT OF WAY ENCROACHMENT

REV. BY	DATE	DESCRIPTION
FIELD REVIEW BY		DATE:
OWNERSHIP VERIFIED BY		DATE:
DATE COMPLETED		

FEDERAL PROJECT NO. E200284

PID NO. 110253

STATE JOB NO.

R/W DESIGNER BJO

R/W REVIEWER JCS

SUMMARY OF ADDITIONAL RIGHT OF WAY

MIA-41-10.32

S:\CIN\4300--4399\4354\004\Drawings\CAD\110253\row\sheets\10253RS008.dgn 10/1/2021 4:39:23 PM Allisonw

NET RESIDUE = RECORD AREA - TOTAL PRO - NET TAKE

ALL AREAS IN ACRES

GRANTEE:
ALL RIGHT OF WAY ACQUIRED IN THE NAME OF
THE CITY OF TROY
UNLESS OTHERWISE SHOWN

PARCEL NO.	OWNER	SHEET NO.	OWNERS RECORD BOOK	OWNERS RECORD PAGE	AUDITOR'S PARCEL	RECORD AREA	TOTAL P.R.O.	GROSS TAKE	P.R.O. IN TAKE	NET TAKE	STRUCTURE	NET RESIDUE LEFT	NET RESIDUE RIGHT	TYPE FUND	REMARKS	AS ACQUIRED BOOK	AS ACQUIRED PAGE
60-T	KATHRYN L ROETTER	28, 29, 30 & 31	2019OR-01833		D08-037940	0.542 (c)	0.092	0.034	0.000	0.034	NO			LOCAL	TO CONSTRUCT PROPOSED DRIVE AND WALK BOULDERS TO REMAIN		
61-T	COLONY PARK DRIVE CONDO ASSOCIATES	30 & 31	DB 602	283	D08-091620	0.882	0.000	0.070	0.000	0.070	NO				TO CONSTRUCT PROPOSED DRIVE AND WALK PRIVATE LANDSCAPING (MINIMIZE DISTURBANCE) REMOVE & RESET LANDSCAPING BLOCKS PAVER SIDEWALK (REMOVE AND RESTORE)		
62-T	JOSHUA L & EVELYN MILLER	30 & 31	2018OR-09457		D08-098100	0.5517	0.000	0.059	0.000	0.059	NO				TO CONSTRUCT PROPOSED DRIVE AND WALK TO COMPLETE GRADING REMOVE AND RELOCATE PRIVATE SIGNS TREE (DO NOT DISTURB)		
63-WD	DANIEL J. ANTHONY	30 & 31	2014OR-09074		D08-033290	0.14	0.000	0.0003	0.000	0.0003	NO				TO CONSTRUCT PROPOSED WALK NET TAKE 12 SQUARE FEET		
63-T						0.14	0.000	0.047	0.000	0.047	NO				TO CONSTRUCT PROPOSED DRIVE AND WALK TO COMPLETE GRADING PRIVATE LANDSCAPING (DO NOT DISTURB)		
64-T	CRON-CHENEY FUNERAL HOMES INC.	30 & 31	DB 530	140	D08-091560	1.52	0.115	0.047	0.000	0.047	NO				TO CONSTRUCT PROPOSED DRIVE AND WALK PRIVATE SIGN (DO NOT DISTURB) PARKING LOT (DO NOT DISTURB) PRIVATE LANDSCAPING (MINIMIZE DISTURBANCE)		
65-T	WMAM HOLDINGS LLC	30 & 31	2017OR-11190		D08-091600	1.06	0.092	0.057	0.000	0.057	NO				TO CONSTRUCT PROPOSED DRIVE AND WALK		
66-T	R & T RENTALS LLC	30, 31, 32 & 33	2016OR-04088		D08-091680	0.8	0.071	0.027	0.000	0.027	NO				TO CONSTRUCT PROPOSED DRIVE AND WALK PRIVATE SIGN (DO NOT DISTURB)		
67-T	RC HEMM INVESTMENTS LLC	30, 31, 32 & 33	2020OR-02600		D08-102044	0.558	0.000	0.083	0.000	0.083	NO			LOCAL	TO CONSTRUCT PROPOSED DRIVE AND WALK PRIVATE LANDSCAPING (DO NOT DISTURB) PARKING LOT (DO NOT DISTURB)		

LEGEND:
WD = WARRANTY DEED
SH = STANDARD HIGHWAY EASEMENT
SL = SLOPE EASEMENT
CH = CHANNEL EASEMENT
PR = PROPERTY RIGHT
T = TEMPORARY
U = UTILITY EASEMENT

NOTE: ALL TEMPORARY PARCELS TO BE OF 18 MONTH DURATION, UNLESS NOTED OTHERWISE IN REMARKS COLUMN.

NOTE: UNDER NO CIRCUMSTANCES ARE TEMPORARY EASEMENTS TO BE USED FOR STORAGE OF MATERIAL OR EQUIPMENT BY THE CONTRACTOR UNLESS NOTED OTHERWISE.

(c) = CALCULATED AREA

* DENOTES RIGHT OF WAY ENCROACHMENT

REV. BY	DATE	DESCRIPTION

FIELD REVIEW BY DATE:
OWNERSHIP VERIFIED BY DATE:
DATE COMPLETED

FEDERAL PROJECT NO. E200284
PID NO. 110253
STATE JOB NO.
R/W DESIGNER BJO
R/W REVIEWER JCS

SUMMARY OF ADDITIONAL RIGHT OF WAY

MIA-41-10.32

15 / 33

167
194

S:\CIN\4300--4399\4354\004\Drawings\CAD\110253\row\sheets\10253RS009.dgn 10/1/2021 4:39:24 PM Allisonw

MIAMI COUNTY
CONCORD TOWNSHIP
CITY OF TROY
SEC. 20 & 21, T. 5 N., R. 6 E.
CONGRESS LANDS WEST OF THE MIAMI RIVER

BEGIN WORK STA. 441+15.03

BEGIN PROJECT STA. 442+14.95

E200 (284)

PUBLIC
1
CITY OF TROY
1611 W. MAIN ST.
TROY, OHIO 45373
D08-250146
LAND USE: YARD

POT STA. 441+71.70

CONSTRUCTION LIMITS

BEGIN ACQUISITION STA. 442+06.79

℄ R/W & CONSTRUCTION S.R. 41 (W. MAIN ST.)

441 442 443 444 445

S 59° 22' 27" E

FENCE (DND)

1-T

℄ N. WESTON RD.

N 0° 03' 26" W

RESIDENTIAL
2
LARRY R ISHMAEL
1597 COVENT RD.
TROY, OHIO 45373
D08-035270
LAND USE: YARD

2-T

℄ COVENT RD..

N 89° 54' 58" E

W. MAIN ST. STA. 444+17.74 =
N. WESTON RD. STA. 10+00.00

N 30° 37' 33" W

PUBLIC
6
CITY OF TROY
MAIN COVENT
TROY, OHIO 45373
D08-250385
LAND USE: YARD

DND

6-T

PI STA. 445+59.74

W. MAIN ST. STA. 444+02.22 =
ALLEY TO HAWORTH CT. STA. 3+12.39

W. MAIN ST. STA. 444+17.74 =
N. WESTON RD. STA. 10+00.00

S58°01'14"E

℄ R/W S.R. 41 (W. MAIN ST.)

℄ CONSTRUCTION S.R. 41 (W. MAIN ST.)

MATCHLINE STA 446+00
(SEE SHEET 18/33)

3-T

4-T

5-T

ASPHALT

10' UTILITY EASEMENT
VOL 24, PG 77

PRIVATE LANDSCAPING
(MINIMAIZE DISTURBANCE)

PRIVATE LANDSCAPING
(MINIMAIZE DISTURBANCE)

PRIVATE SIGN (DND)

℄ HAWORTH CT.

COMMERCIAL
3
GOODWILL INDUSTRIES
1660 W. MAIN ST.
TROY, OHIO 45373
D08-250722
LAND USE: PARKING

10' WATER EASEMENT
PB 13, PG 81

10' STORM SEWER EASEMENT
PB 13, PG 81

COMMERCIAL
4
GIANT DAYTON LLC
1590 W. MAIN ST.
TROY, OHIO 45373
D08-058790
LAND USE: PARKING

10' UTILITY EASEMENT
PB 13, PG 81

10' GAS EASEMENT
DB 349, PG 661

COMMERCIAL
5
MAINSOURCE BANK
1580 W. MAIN ST.
TROY, OHIO 45373
D08-101818
LAND USE: PARKING

SUBDIVISIONS:

WESTBROOK SUBDIVISION NO. 3, PLAT BOOK 5, PAGE 50

PEOPLES WESTSIDE REPLAT, PLAT BOOK 16, PAGE 134

REPLAT OF PART OF OUTLOT NO. 384, PLAT BOOK 13, PAGE 81

WESTON PLAZA 24, PLAT BOOK 20, PAGE 35

PLAT OF THE CITY OF TROY, OHIO
OUTLOTS: 384

INLOTS: 3492-3493, 3508, 7041, 7828, 9491

REV. BY	DATE	DESCRIPTION

DATE COMPLETED

HORIZONTAL SCALE IN FEET
0 10 20 40

PID NO. 110253

R/W DESIGNER BJO
R/W REVIEWER JCS

RIGHT OF WAY TOPO SHEET
STA 441+15 TO STA 446+00

MIA-41-10.32

16 / 33

168 / 194

S:\CIN\4300--4399\4354\004\Drawings\CAD\110253\row\sheets\10253RT001.dgn 10/1/2021 4:39:25 PM Allisonw

SUBDIVISIONS:

WESTBROOK SUBDIVISION NO. 3, PLAT BOOK 5, PAGE 50

PEOPLES WESTSIDE REPLAT, PLAT BOOK 16, PAGE 134

REPLAT OF PART OF OUTLOT NO. 384, PLAT BOOK 13, PAGE 81

WESTON PLAZA 24, PLAT BOOK 20, PAGE 35

PLAT OF THE CITY OF TROY, OHIO
OUTLOTS: 384

INLOTS: 3492-3493, 3508, 7041, 7828, 9491

MIAMI COUNTY
CONCORD TOWNSHIP
CITY OF TROY
SEC. 20 & 21, T. 5 N., R. 6 E.
CONGRESS LANDS WEST OF THE MIAMI RIVER

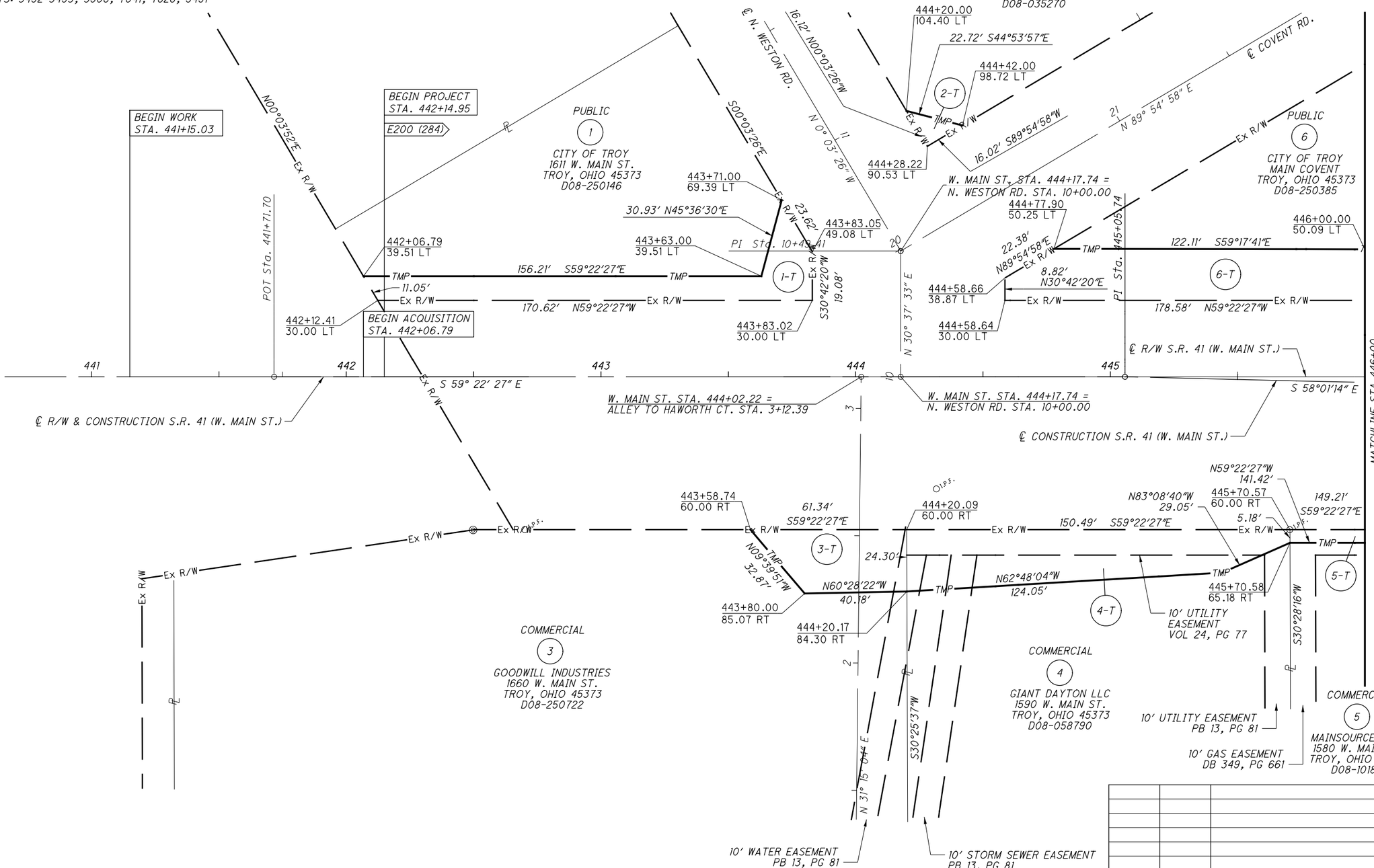

NOTE: LABELS FOR STATION AND OFFSET TAKEN FROM ℄ R/W S.R.41 (W. MAIN ST.)

REV. BY	DATE	DESCRIPTION

DATE COMPLETED

HORIZONTAL SCALE IN FEET: 0, 10, 20, 40

PID NO. 110253

R/W DESIGNER BJO
R/W REVIEWER JCS

RIGHT OF WAY BOUNDARY SHEET
STA 441+15 TO STA 446+00

MIA-41-10.32

17 / 33

169
194

S:\CIN\4300--4399\4354\004\Drawings\CAD\110253\row\sheets\10253RB001.dgn 10/1/2021 4:39:26 PM Allisonw

MIAMI COUNTY
CONCORD TOWNSHIP
CITY OF TROY
SEC. 20 & 21, T. 5 N., R. 6 E.
CONGRESS LANDS WEST OF THE MIAMI RIVER

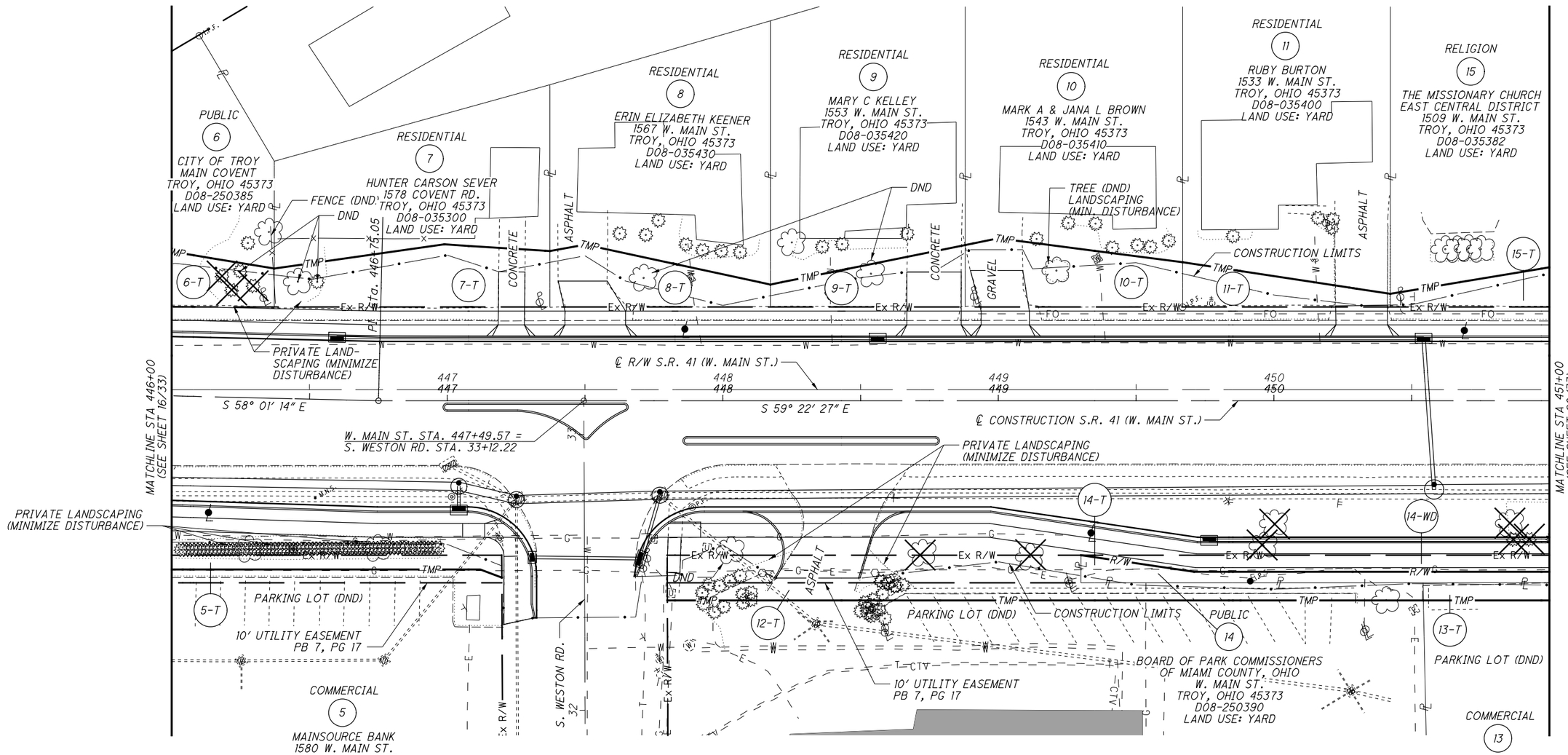

SUBDIVISIONS:

WESTBROOK SUBDIVISION NO. 3, PLAT BOOK 5, PAGE 50

PEOPLES WESTSIDE REPLAT, PLAT BOOK 16, PAGE 134

PLAT OF THE CITY OF TROY, OHIO
OUTLOTS: 380, 389, 390

INLOTS: 3422, 3493-3494, 3501-3507, 10327

REV. BY	DATE	DESCRIPTION
DATE COMPLETED		

HORIZONTAL SCALE IN FEET
0 10 20 40

PID NO. 110253

R/W DESIGNER BJO
R/W REVIEWER JCS

RIGHT OF WAY TOPO SHEET
STA 446+00 TO STA 451+00

MIA-41-10.32

18 / 33

170 / 194

S:\CIN\4300-4399\4354\004\Drawings\CAD\110253\row\sheets\10253RT002.dgn 10/1/2021 4:39:27 PM Allisonw

MIAMI COUNTY
CONCORD TOWNSHIP
CITY OF TROY
SEC. 20 & 21, T. 5 N., R. 6 E.
CONGRESS LANDS WEST OF THE MIAMI RIVER

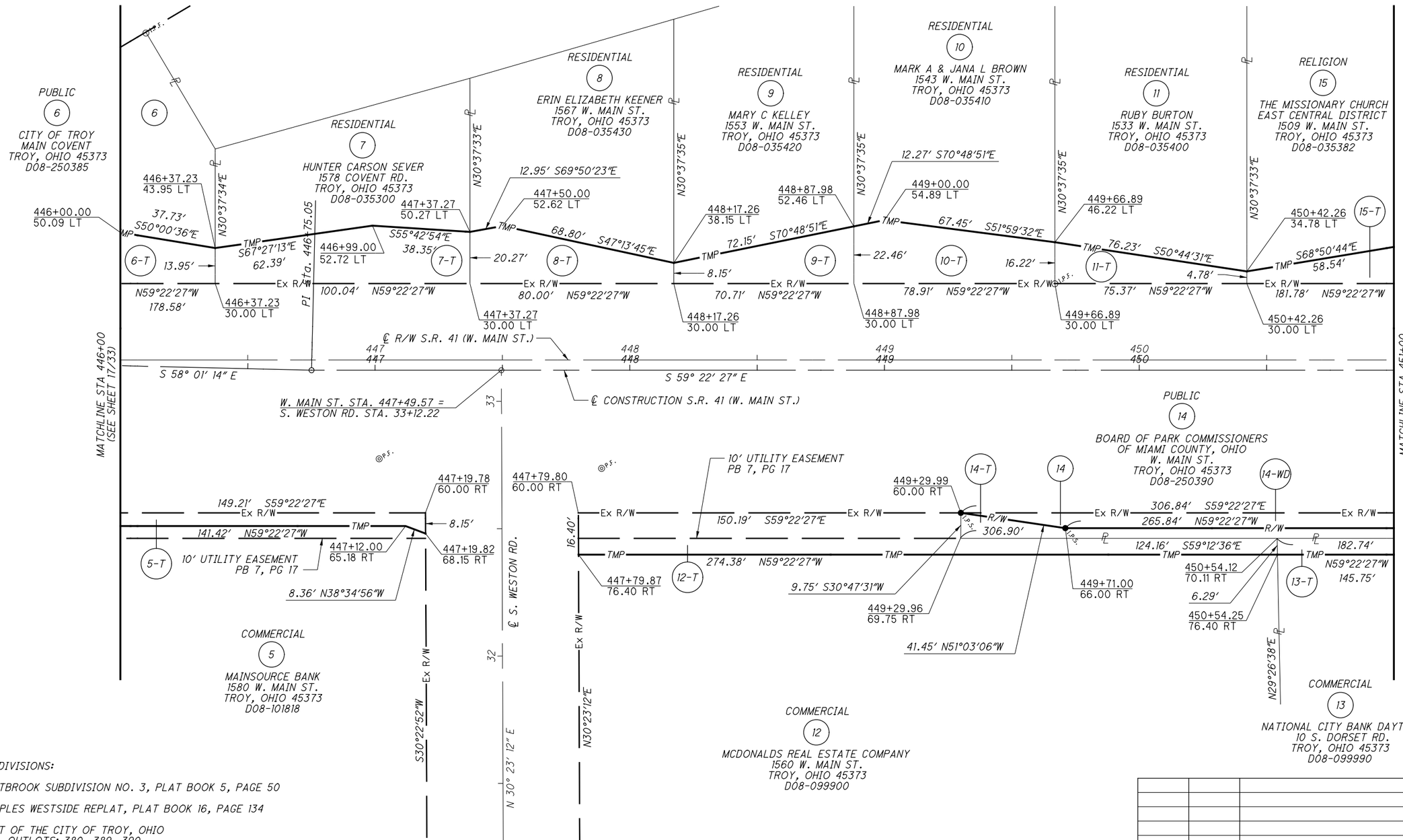

SUBDIVISIONS:

WESTBROOK SUBDIVISION NO. 3, PLAT BOOK 5, PAGE 50

PEOPLES WESTSIDE REPLAT, PLAT BOOK 16, PAGE 134

PLAT OF THE CITY OF TROY, OHIO
OUTLOTS: 380, 389, 390

INLOTS: 3422, 3493-3494, 3501-3507, 10327

REV. BY	DATE	DESCRIPTION

DATE COMPLETED

HORIZONTAL SCALE IN FEET
0 10 20 40

PID NO. 110253

R/W DESIGNER BJO
R/W REVIEWER JCS

RIGHT OF WAY BOUNDARY SHEET
STA 446+00 TO STA 451+00

MIA-41-10.32

19 / 33

171
194

S:\CIN\4300--4399\4354\004\Drawings\CAD\110253\row\sheets\10253RB002.dgn 10/1/2021 4:39:29 PM Allisonw

MIAMI COUNTY
CONCORD TOWNSHIP
CITY OF TROY
SEC. 20 & 21, T. 5 N., R. 6 E.
CONGRESS LANDS WEST OF THE MIAMI RIVER

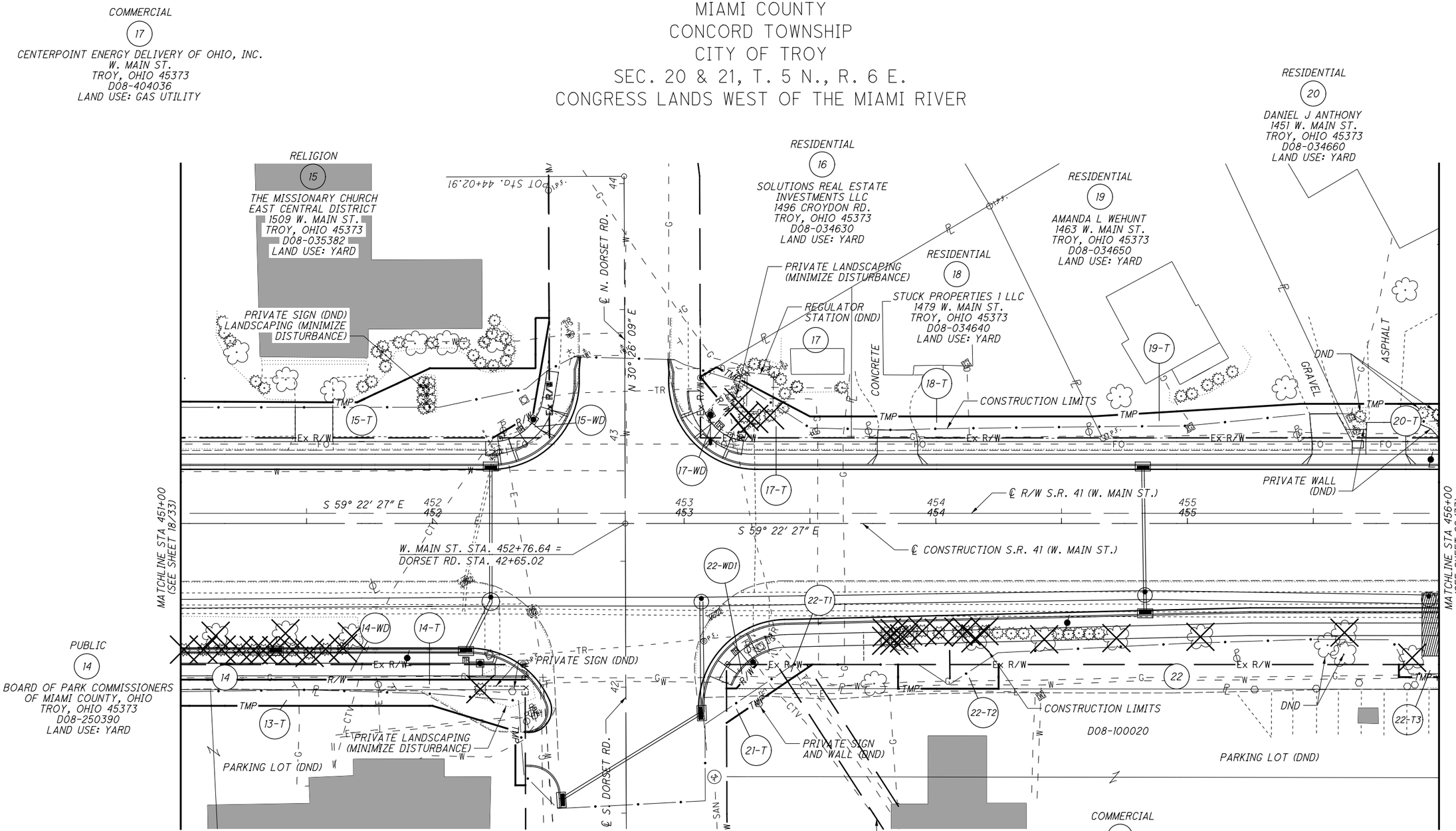

SUBDIVISIONS:

WESTBROOK SUBDIVISION NO. 2, PLAT BOOK 5, PAGE 16

WESTBROOK SUBDIVISION NO. 3, PLAT BOOK 5, PAGE 50

WESTBROOK SUBDIVISION NO. 6, PLAT BOOK 7, PAGE 17

PLAT OF THE CITY OF TROY, OHIO
OUTLOTS: 380, 389-392

INLOTS: 3422-3426, 3501-3503

REV. BY	DATE	DESCRIPTION

DATE COMPLETED

HORIZONTAL SCALE IN FEET
0 10 20 40

PID NO. 110253

R/W DESIGNER BJO
R/W REVIEWER JCS

RIGHT OF WAY TOPO SHEET
STA 451+00 TO STA 456+00

MIA-41-10.32

20 / 33

172
194

S:\CIN\4300--4399\4354\004\Drawings\CAD\110253\row\sheets\10253RT003.dgn 10/1/2021 4:39:30 PM Allisonw

SUBDIVISIONS:

WESTBROOK SUBDIVISION NO. 2, PLAT BOOK 5, PAGE 16

WESTBROOK SUBDIVISION NO. 3, PLAT BOOK 5, PAGE 50

WESTBROOK SUBDIVISION NO. 6, PLAT BOOK 7, PAGE 17

PLAT OF THE CITY OF TROY, OHIO
OUTLOTS: 380, 389-392

INLOTS: 3422-3426, 3501-3503

MIAMI COUNTY
CONCORD TOWNSHIP
CITY OF TROY
SEC. 20 & 21, T. 5 N., R. 6 E.
CONGRESS LANDS WEST OF THE MIAMI RIVER

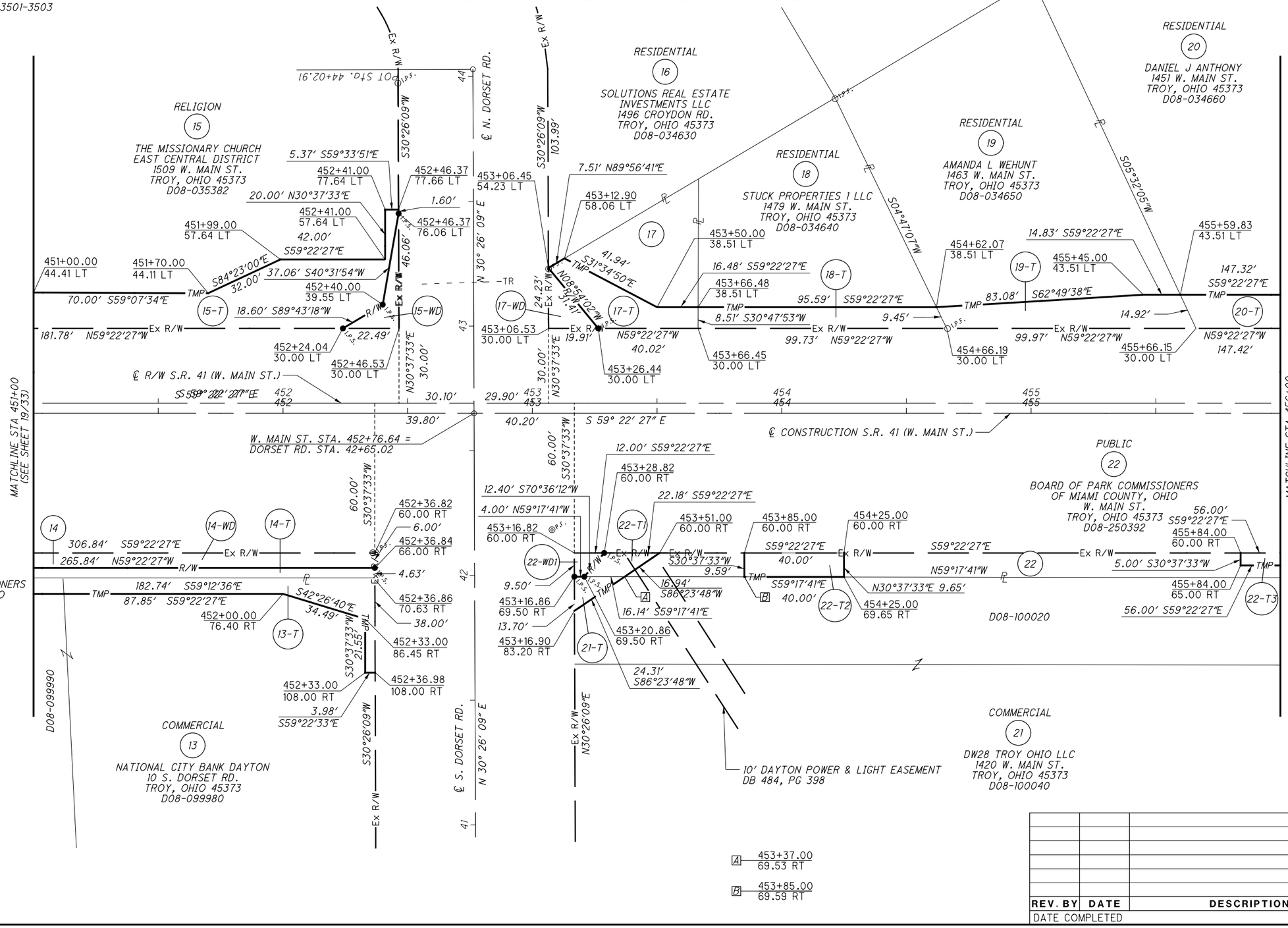

REV. BY	DATE	DESCRIPTION
DATE COMPLETED		

RIGHT OF WAY BOUNDARY SHEET
STA 451+00 TO STA 456+00

MIA-41-10.32

R/W DESIGNER BJO
R/W REVIEWER JCS

PID NO. 110253

HORIZONTAL SCALE IN FEET
0 10 20 40

21 / 33

173 / 194

S:\CIN\4300--4399\4354\004\Drawings\CAD\110253\row\sheets\10253RB003.dgn 10/1/2021 4:39:31 PM Allisonw

MIAMI COUNTY
CONCORD TOWNSHIP
CITY OF TROY
SEC. 20 & 21, T. 5 N., R. 6 E.
CONGRESS LANDS WEST OF THE MIAMI RIVER

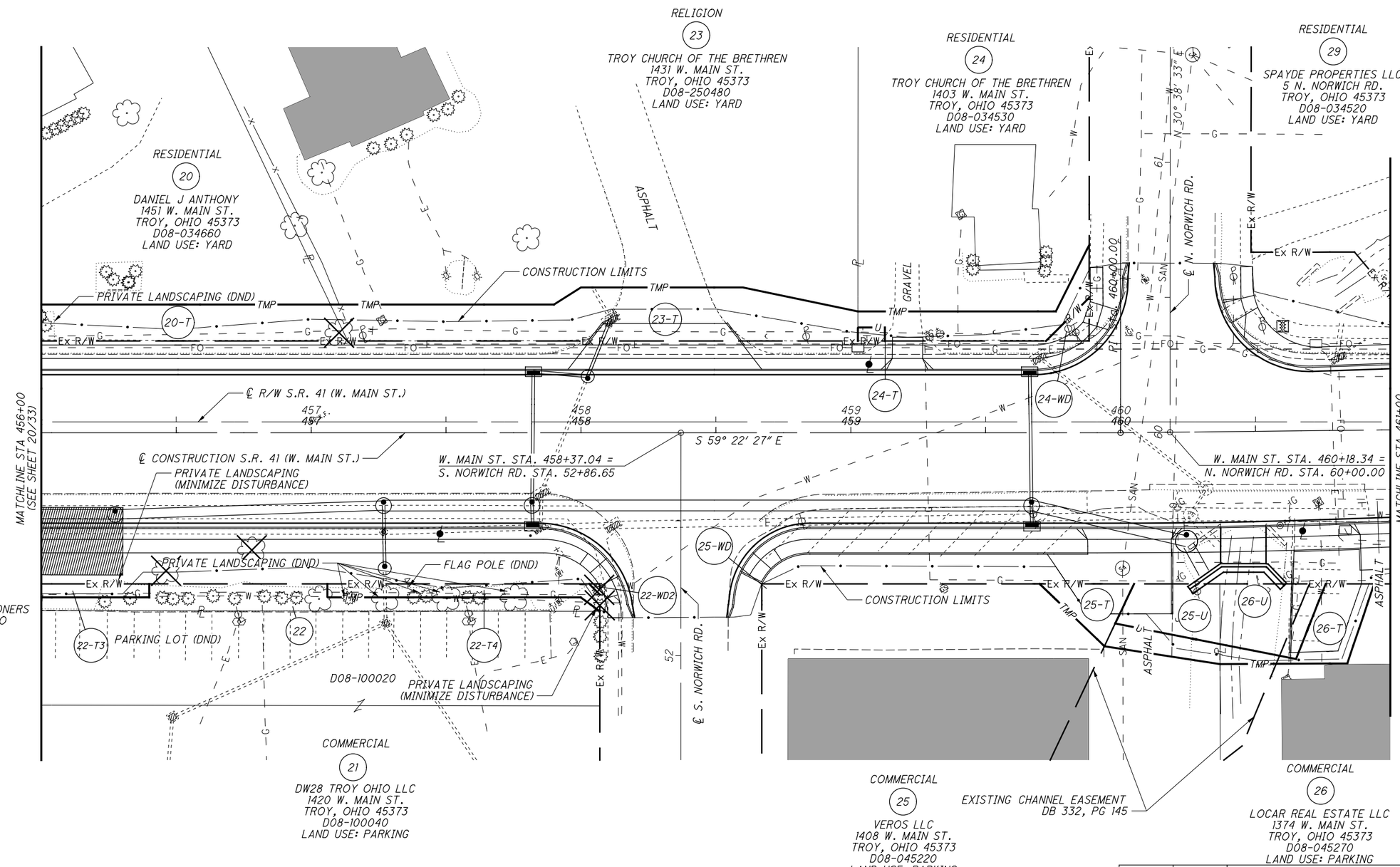

SUBDIVISIONS:

WESTBROOK SUBDIVISION NO. 2, PLAT BOOK 5, PAGE 16

WESTBROOK SUBDIVISION NO. 6, PLAT BOOK 7, PAGE 17

PLAT OF THE CITY OF TROY, OHIO
OUTLOTS: 391-392

INLOTS: 3410-3411, 3417-3418, 3426-3428, 4563, 4565

REV. BY	DATE	DESCRIPTION

DATE COMPLETED

HORIZONTAL SCALE IN FEET
0 10 20 40

PID NO. 110253

R/W DESIGNER BJO
R/W REVIEWER JCS

RIGHT OF WAY TOPO SHEET
STA 456+00 TO STA 461+00

MIA-41-10.32

22 / 33

174 / 194

S:\CIN\4300-4399\4354\004\Drawings\CAD\110253\row\sheets\10253RT004.dgn 10/1/2021 4:39:32 PM Allisonw

MIAMI COUNTY
CONCORD TOWNSHIP
CITY OF TROY
SEC. 20 & 21, T. 5 N., R. 6 E.
CONGRESS LANDS WEST OF THE MIAMI RIVER

RESIDENTIAL (20)
DANIEL J ANTHONY
1451 W. MAIN ST.
TROY, OHIO 45373
D08-034660

RELIGION (23)
TROY CHURCH OF THE BRETHREN
1431 W. MAIN ST.
TROY, OHIO 45373
D08-250480

RESIDENTIAL (24)
TROY CHURCH OF THE BRETHREN
1403 W. MAIN ST.
TROY, OHIO 45373
D08-034530

RESIDENTIAL (29)
SPAYDE PROPERTIES LLC
5 N. NORWICH RD.
TROY, OHIO 45373
D08-034520

PUBLIC (22)
BOARD OF PARK COMMISSIONERS
OF MIAMI COUNTY, OHIO
W. MAIN ST.
TROY, OHIO 45373
D08-250392

COMMERCIAL (21)
DW28 TROY OHIO LLC
1420 W. MAIN ST.
TROY, OHIO 45373
D08-100040

COMMERCIAL (25)
VEROS LLC
1408 W. MAIN ST.
TROY, OHIO 45373
D08-045220

COMMERCIAL (26)
LOCAR REAL ESTATE LLC
1374 W. MAIN ST.
TROY, OHIO 45373
D08-045270

EXISTING CHANNEL EASEMENT
DB 332, PG 145

D08-100020

℄ N. NORWICH RD.

℄ S. NORWICH RD.

W. MAIN ST. STA. 458+37.04 =
S. NORWICH RD. STA. 52+86.65

W. MAIN ST. STA. 460+18.34 =
N. NORWICH RD. STA. 60+00.00

℄ CONSTRUCTION S.R. 41 (W. MAIN ST.)

℄ R/W S.R. 41 (W. MAIN ST.)
S 59° 22' 27" E

MATCHLINE STA 456+00
(SEE SHEET 21/33)

MATCHLINE STA 461+00
(SEE SHEET 25/33)

SUBDIVISIONS:

WESTBROOK SUBDIVISION NO. 2, PLAT BOOK 5, PAGE 16

WESTBROOK SUBDIVISION NO. 6, PLAT BOOK 7, PAGE 17

PLAT OF THE CITY OF TROY, OHIO
OUTLOTS: 391-392

INLOTS: 3410-3411, 3417-3418, 3426-3428, 4563, 565

REV. BY	DATE	DESCRIPTION
DATE COMPLETED		

HORIZONTAL SCALE IN FEET
0 10 20 40

PID NO. 110253

R/W DESIGNER BJO
R/W REVIEWER JCS

RIGHT OF WAY BOUNDARY SHEET
STA 456+00 TO STA 461+00

MIA-41-10.32

23 / 33

175
194

S:\CIN\4300--4399\4354\004\Drawings\CAD\110253\row\sheets\10253RB004.dgn 10/1/2021 4:39:34 PM Allisonw

SUBDIVISIONS:

WESTBROOK SUBDIVISION NO. 2, PLAT BOOK 5, PAGE 16

PLAT OF THE CITY OF TROY, OHIO
OUTLOTS: 230, 254-255, 311-315

INLOTS: 3410, 4565, 4567

MIAMI COUNTY
CONCORD TOWNSHIP
CITY OF TROY
SEC. 20 & 21, T. 5 N., R. 6 E.
CONGRESS LANDS WEST OF THE MIAMI RIVER

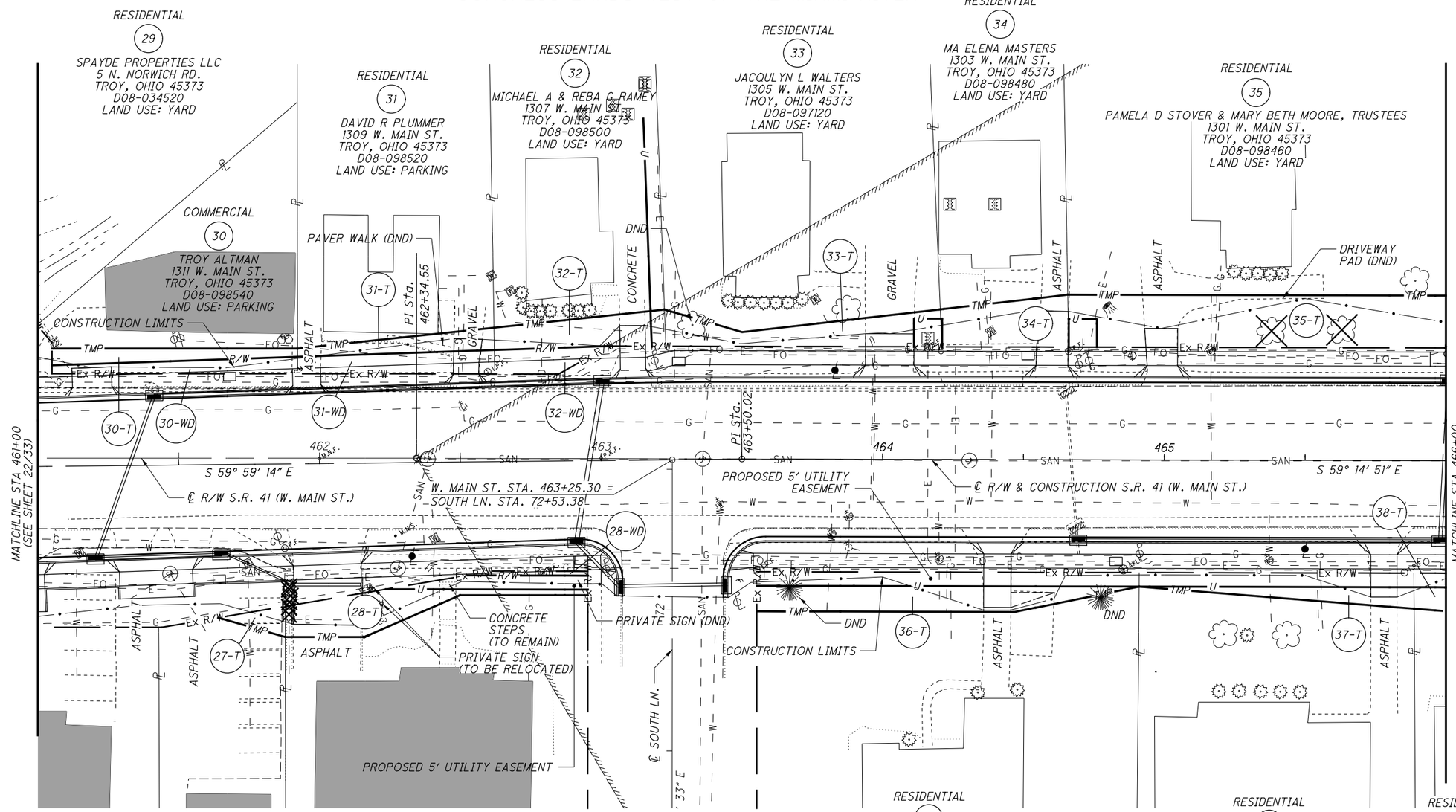

REV. BY	DATE	DESCRIPTION

DATE COMPLETED

HORIZONTAL SCALE IN FEET
0 10 20 40

PID NO. 110253

R/W DESIGNER BJO
R/W REVIEWER JCS

RIGHT OF WAY TOPO SHEET
STA 461+00 TO STA 466+00

MIA-41-10.32

24 / 33

176 / 194

S:\CIN\4300--4399\4354\004\Drawings\CAD\110253\row\sheets\10253RT005.dgn 10/1/2021 4:39:35 PM Allisonw

MIAMI COUNTY
CONCORD TOWNSHIP
CITY OF TROY
SEC. 20 & 21, T. 5 N., R. 6 E.
CONGRESS LANDS WEST OF THE MIAMI RIVER

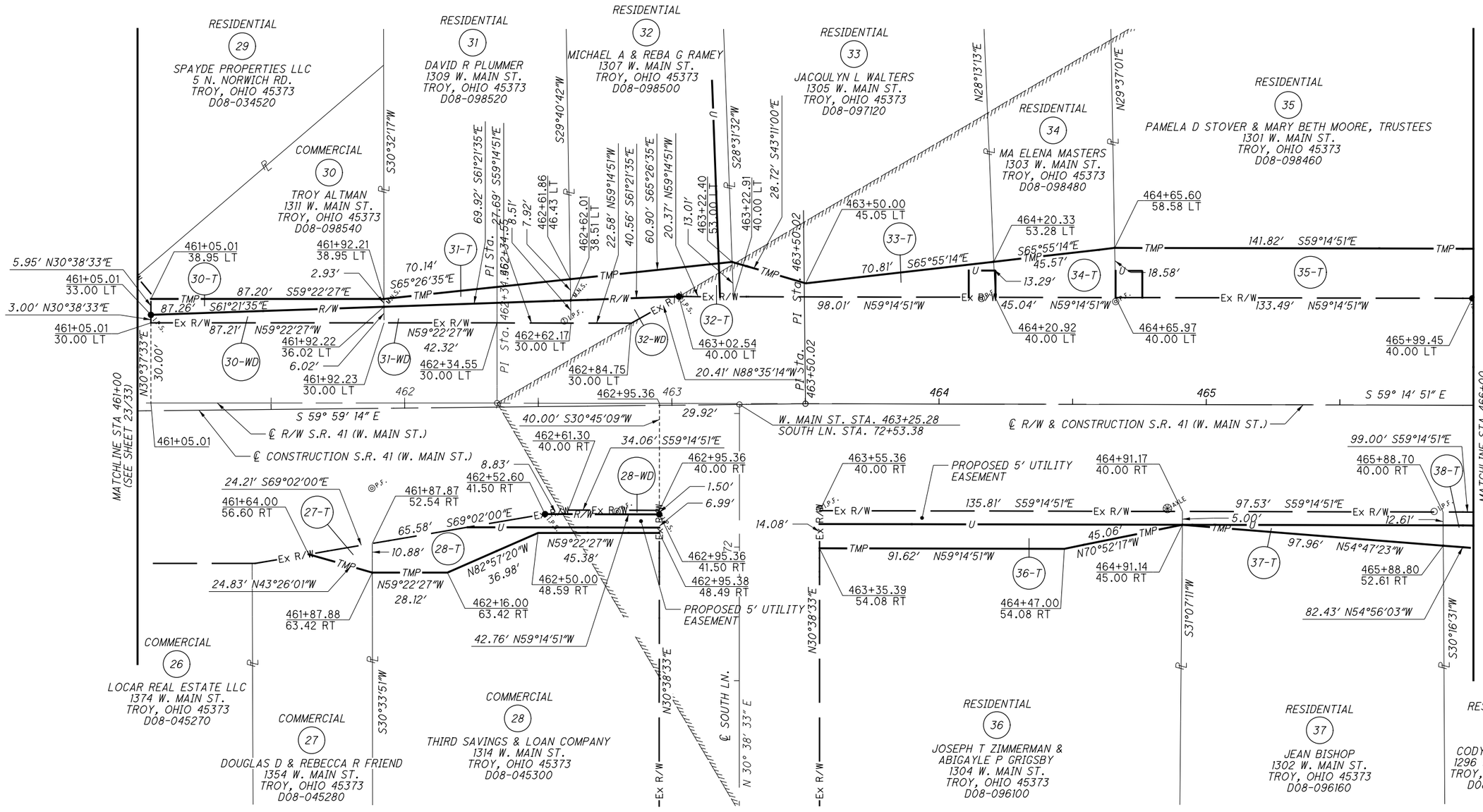

SUBDIVISIONS:

WESTBROOK SUBDIVISION NO. 2, PLAT BOOK 5, PAGE 16

PLAT OF THE CITY OF TROY, OHIO
OUTLOTS: 230, 254-255, 311-315

INLOTS: 3410, 4565, 4567

REV. BY	DATE	DESCRIPTION

DATE COMPLETED

HORIZONTAL SCALE IN FEET
0 10 20 40

PID NO. 110253

R/W DESIGNER BJO
R/W REVIEWER JCS

RIGHT OF WAY BOUNDARY SHEET
STA 461+00 TO STA 466+00

MIA-41-10.32

25 / 33

177 / 194

S:\CIN\4300--4399\4354\004\Drawings\CAD\110253\row\sheets\10253RB005.dgn 10/1/2021 4:39:37 PM Allisonw

MIAMI COUNTY
CONCORD TOWNSHIP
CITY OF TROY
SEC. 20 & 21, T. 5 N., R. 6 E.
CONGRESS LANDS WEST OF THE MIAMI RIVER

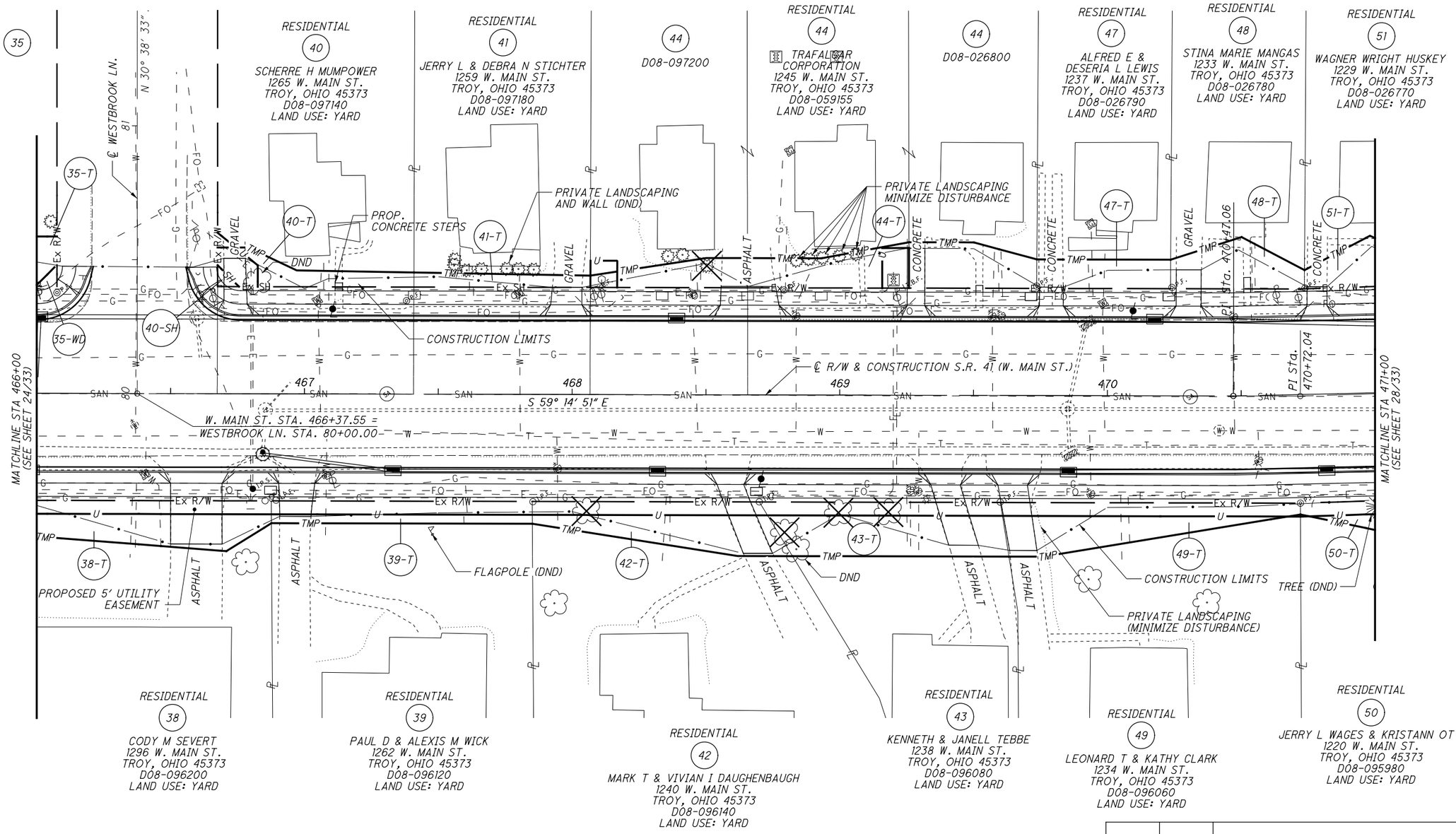

SUBDIVISIONS:

PLAT OF THE CITY OF TROY, OHIO
OUTLOTS: 228-230, 255-257, 311

INLOTS: 2682-2685, 10318-10319

REV. BY	DATE	DESCRIPTION

DATE COMPLETED

HORIZONTAL SCALE IN FEET
0 10 20 40

PID NO. 110253

R/W DESIGNER BJO
R/W REVIEWER JCS

RIGHT OF WAY TOPO SHEET
STA 466+00 TO STA 471+00

MIA-41-10.32

26 / 33

178
194

S:\CIN\4300--4399\4354\004\Drawings\CAD\110253\row\sheets\10253RT006.dgn 10/1/2021 4:39:38 PM Allisonw

MIAMI COUNTY
CONCORD TOWNSHIP
CITY OF TROY
SEC. 20 & 21, T. 5 N., R. 6 E.
CONGRESS LANDS WEST OF THE MIAMI RIVER

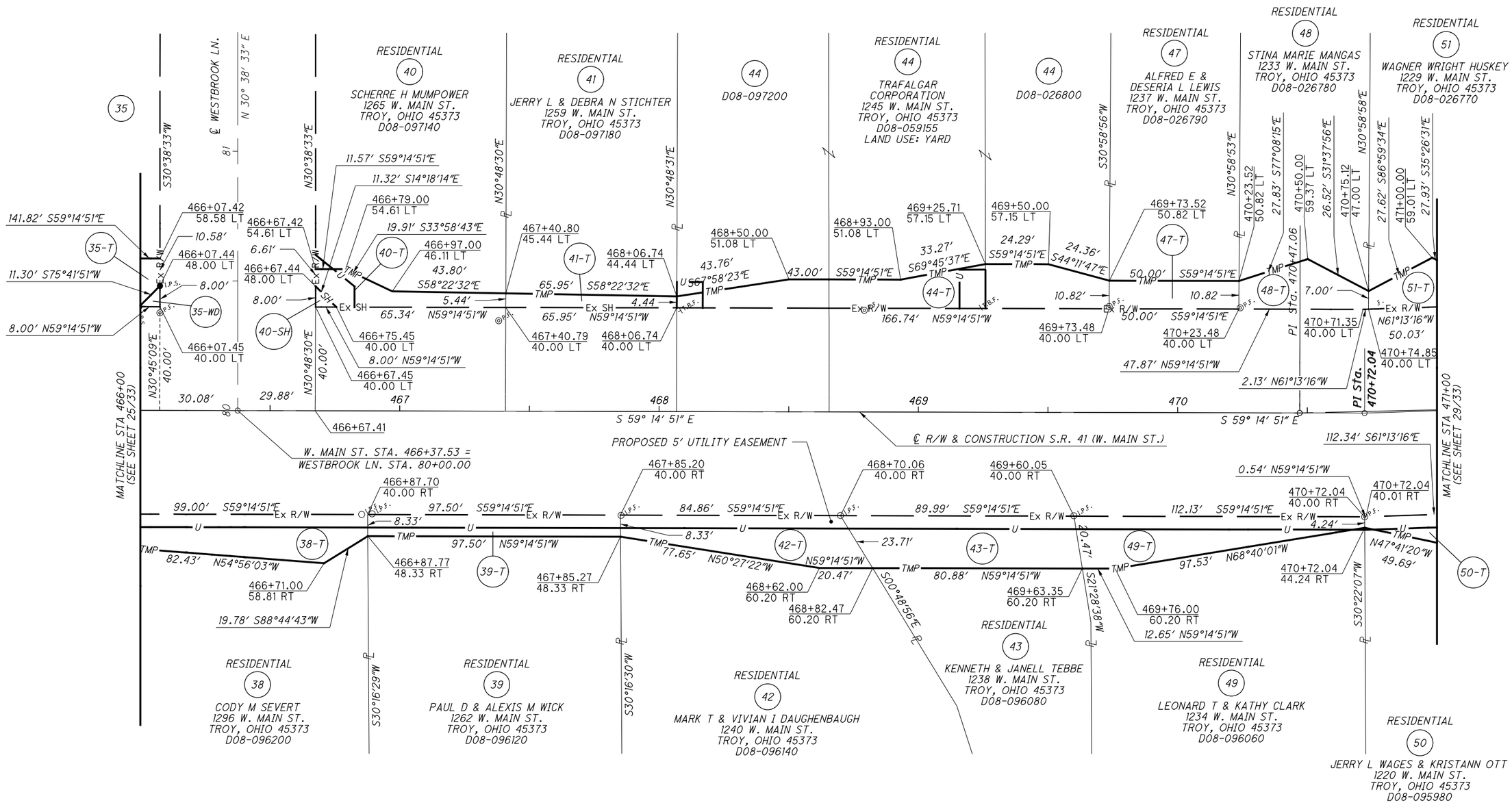

SUBDIVISIONS:

PLAT OF THE CITY OF TROY, OHIO
OUTLOTS: 228-230, 255-257, 311

INLOTS: 2682-2685, 10318-10319

REV. BY	DATE	DESCRIPTION

DATE COMPLETED

HORIZONTAL SCALE IN FEET
0 10 20 40

PID NO. 110253

R/W DESIGNER BJO
R/W REVIEWER JCS

RIGHT OF WAY BOUNDARY SHEET
STA 466+00 TO STA 471+00

MIA-41-10.32

27 / 33

179 / 194

S:\CIN\4300--4399\4354\004\Drawings\CAD\110253\row\sheets\10253RB006.dgn 10/1/2021 4:39:39 PM Allisonw

MIAMI COUNTY
CONCORD TOWNSHIP
CITY OF TROY
SEC. 20 & 21, T. 5 N., R. 6 E.
CONGRESS LANDS WEST OF THE MIAMI RIVER

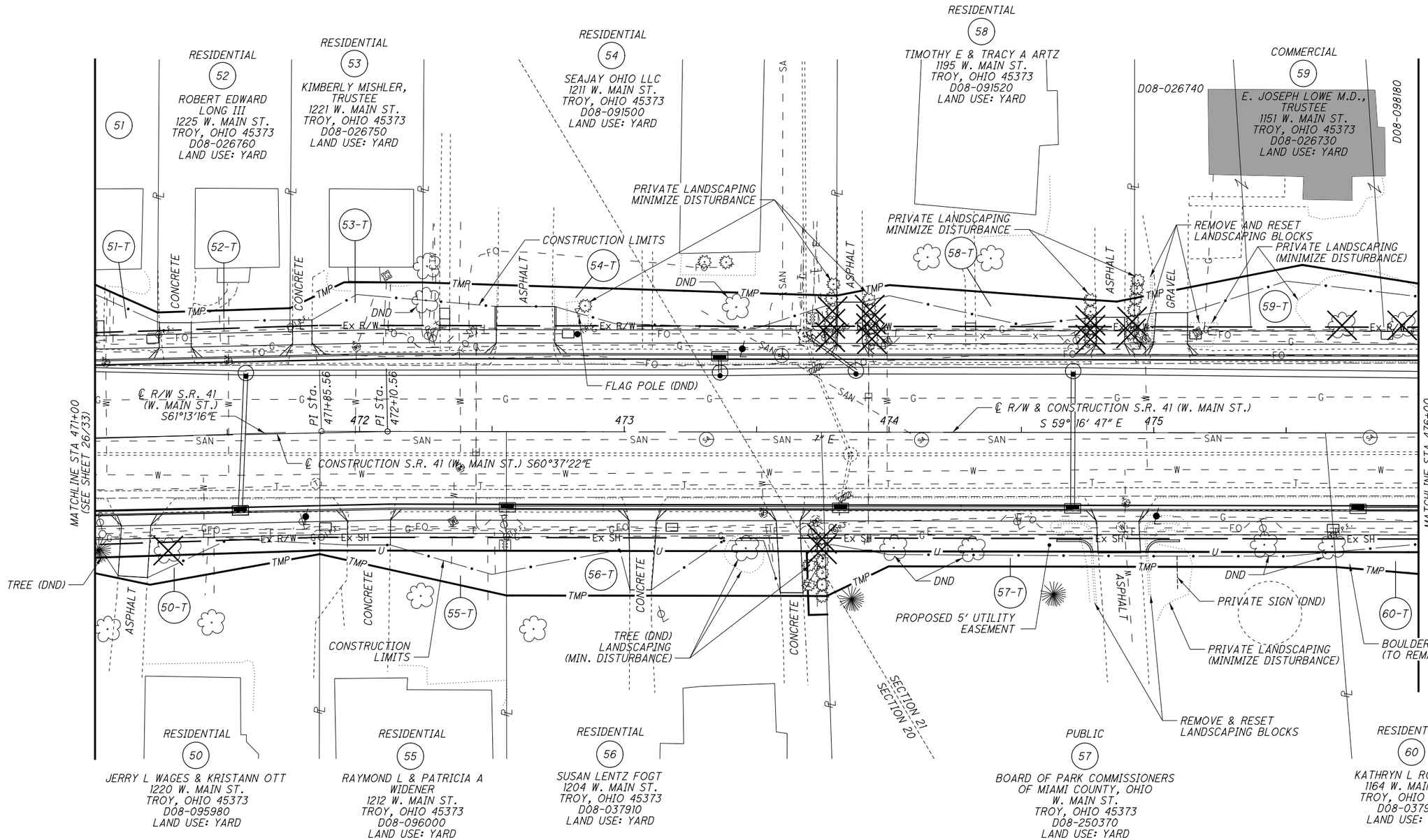

SUBDIVISIONS:

PLAT OF THE CITY OF TROY, OHIO
OUTLOTS: 70-71, 226, 228, 260, 294

INLOTS: 2678-2681, 3761-3764

REV. BY	DATE	DESCRIPTION

DATE COMPLETED

HORIZONTAL SCALE IN FEET
0 10 20 40

PID NO. 110253

R/W DESIGNER BJO
R/W REVIEWER JCS

RIGHT OF WAY TOPO SHEET
STA 471+00 TO STA 476+00

MIA-41-10.32

28 / 33

180 / 194

S:\CIN\4300--4399\4354\004\Drawings\CAD\110253\row\sheets\10253RT007.dgn 10/1/2021 4:39:40 PM Allisonw

MIAMI COUNTY
CONCORD TOWNSHIP
CITY OF TROY
SEC. 20 & 21, T. 5 N., R. 6 E.
CONGRESS LANDS WEST OF THE MIAMI RIVER

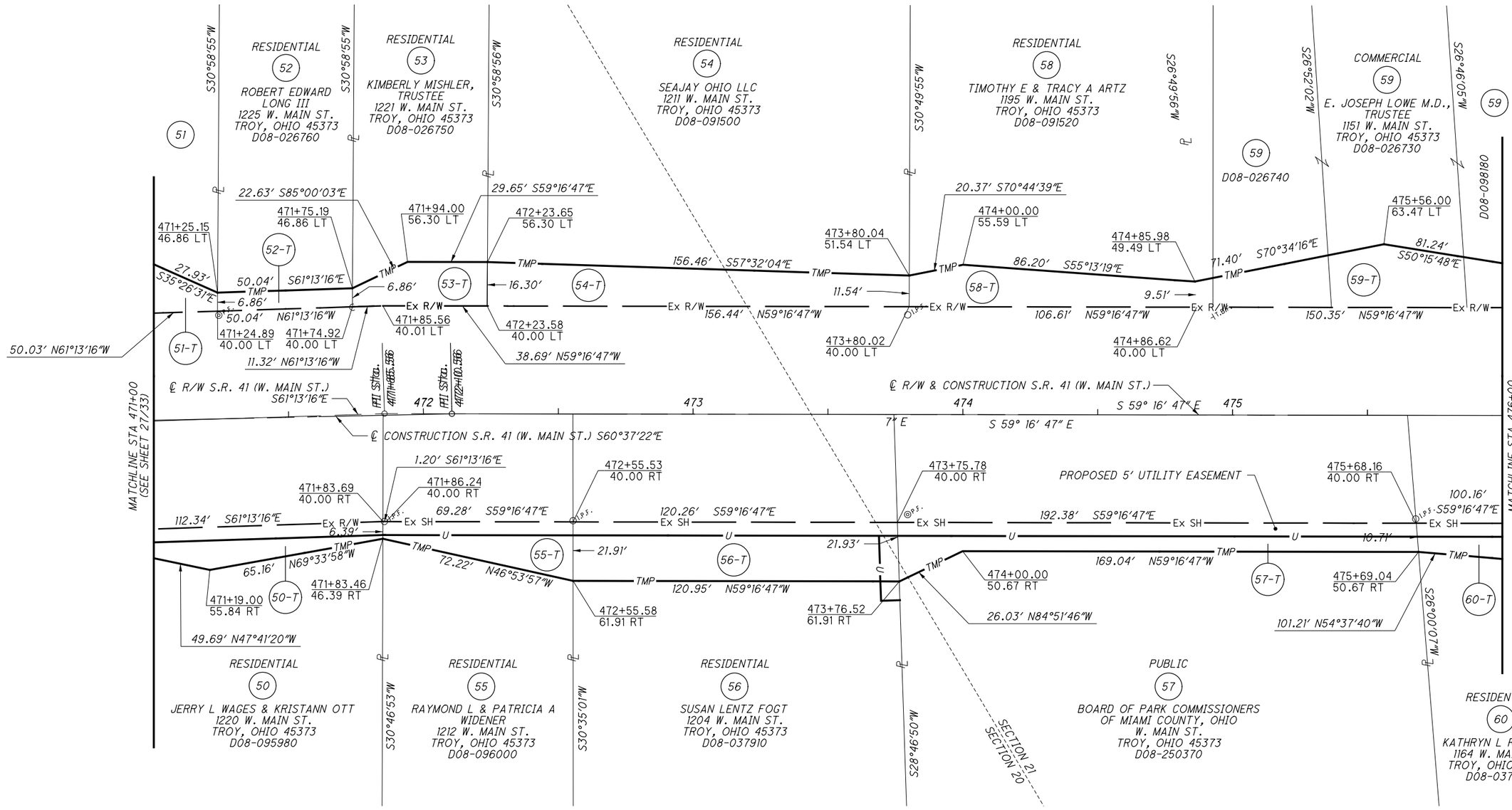

SUBDIVISIONS:

PLAT OF THE CITY OF TROY, OHIO
OUTLOTS: 70-71, 226, 228, 260, 294

INLOTS: 2678-2681, 3761-3764

REV. BY	DATE	DESCRIPTION

DATE COMPLETED

HORIZONTAL SCALE IN FEET
0 10 20 40

PID NO. 110253

R/W DESIGNER BJO
R/W REVIEWER JCS

RIGHT OF WAY BOUNDARY SHEET
STA 471+00 TO STA 476+00

MIA-41-10.32

29 / 33

181
194

S:\CIN\4300--4399\4354\004\Drawings\CAD\110253\row\sheets\10253RB007.dgn 10/1/2021 4:39:41 PM Allisonw

MIAMI COUNTY
CONCORD TOWNSHIP
CITY OF TROY
SEC. 20 & 21, T. 5 N., R. 6 E.
CONGRESS LANDS WEST OF THE MIAMI RIVER

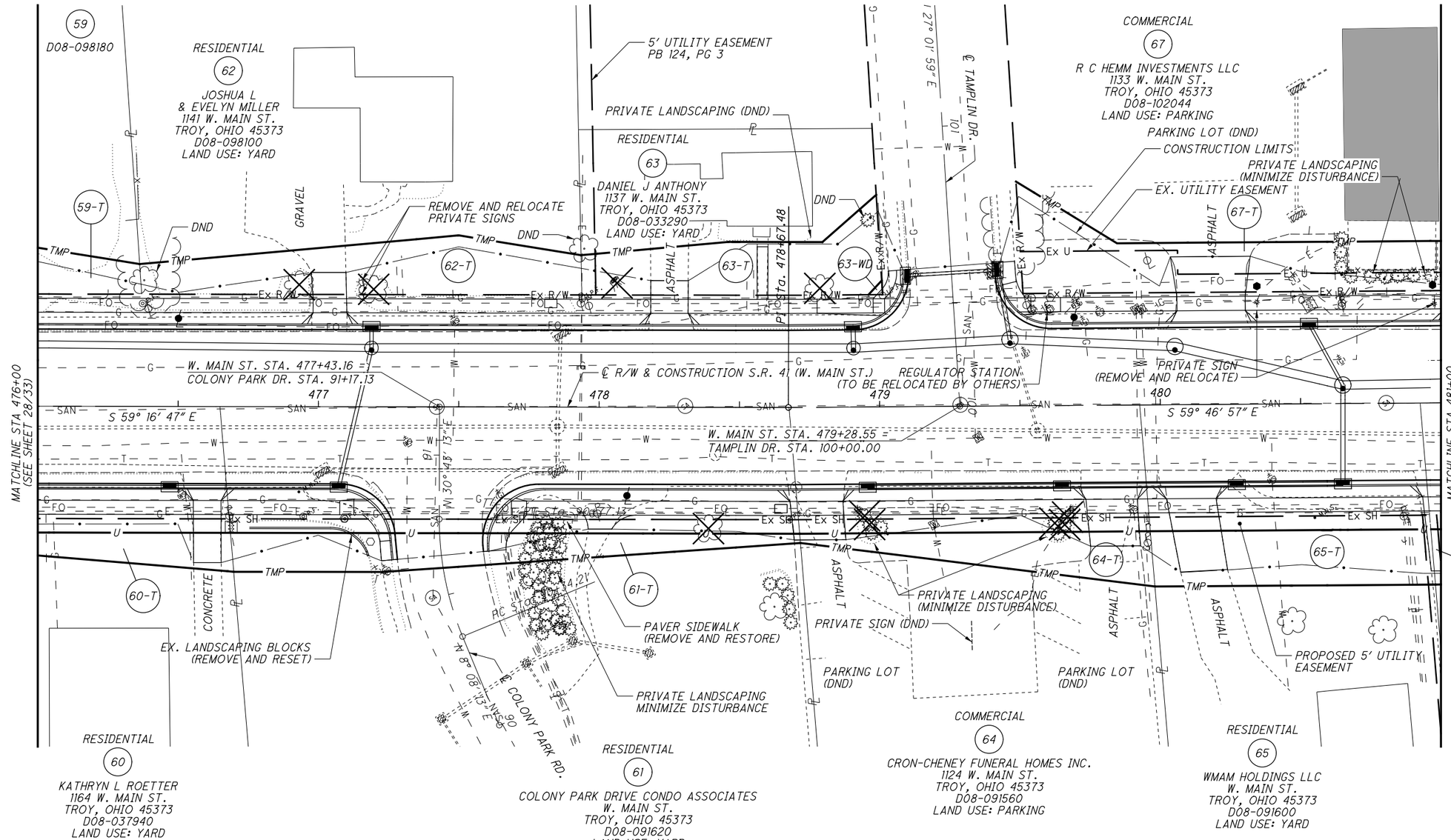

SUBDIVISIONS:

PLAT OF THE CITY OF TROY, OHIO
OUTLOTS: 72, 294

INLOTS: 2678-2679, 3279, 3764, 7941

REV. BY	DATE	DESCRIPTION

DATE COMPLETED

HORIZONTAL SCALE IN FEET
0 10 20 40

PID NO. 110253

R/W DESIGNER BJO
R/W REVIEWER JCS

RIGHT OF WAY TOPO SHEET
STA 476+00 TO STA 481+00

MIA-41-10.32

30 / 33

182 / 194

S:\CIN\4300-4399\4354\004\Drawings\CAD\110253\row\sheets\10253RT008.dgn 10/1/2021 4:39:42 PM Allisonw

MIAMI COUNTY
CONCORD TOWNSHIP
CITY OF TROY
SEC. 20 & 21, T. 5 N., R. 6 E.
CONGRESS LANDS WEST OF THE MIAMI RIVER

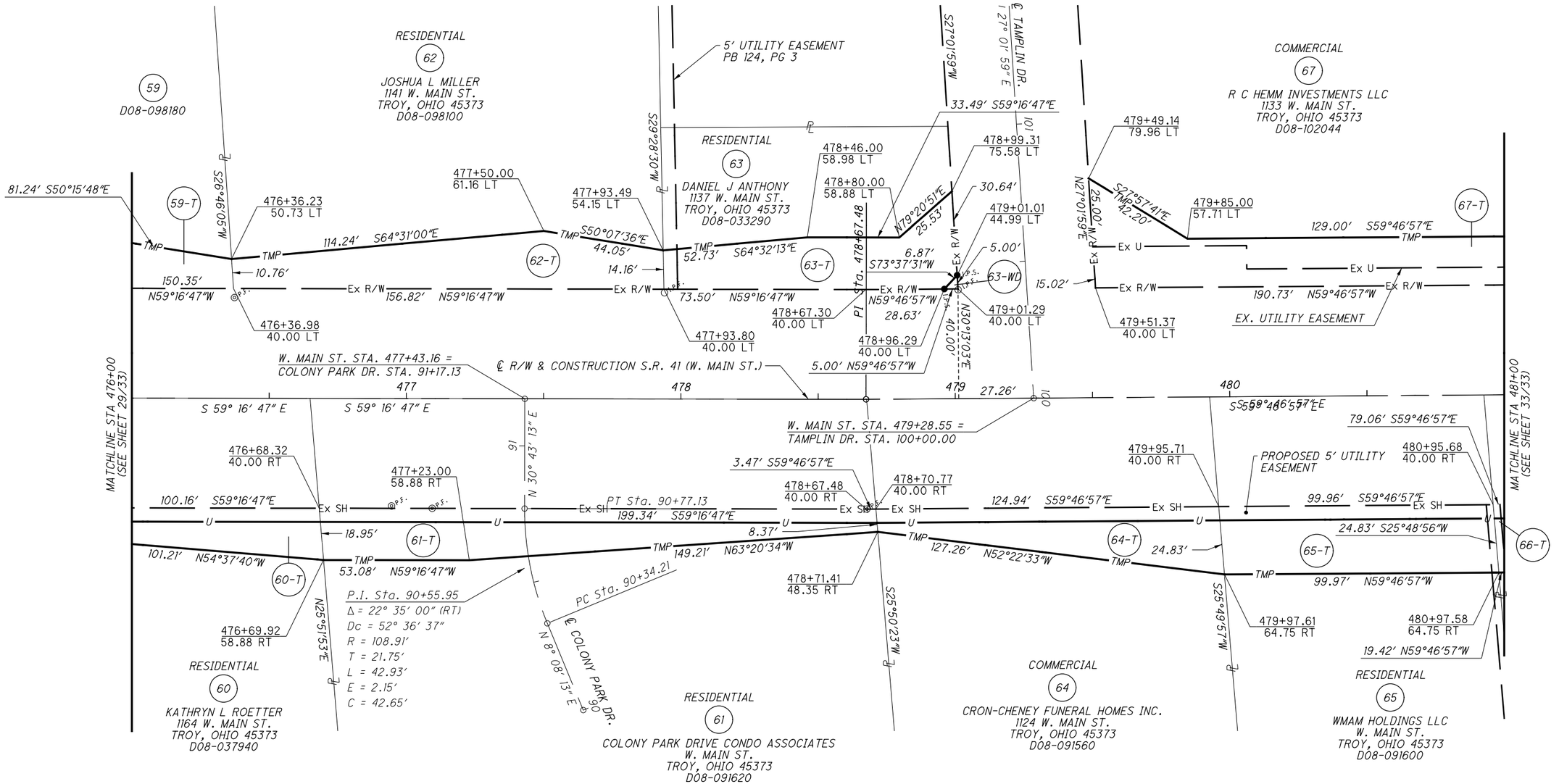

SUBDIVISIONS:

PLAT OF THE CITY OF TROY, OHIO
OUTLOTS: 72, 294

INLOTS: 2678-2679, 3279, 3764, 7941

REV. BY	DATE	DESCRIPTION

DATE COMPLETED

HORIZONTAL SCALE IN FEET
0 10 20 40

PID NO. 110253

R/W DESIGNER BJO
R/W REVIEWER JCS

RIGHT OF WAY BOUNDARY SHEET
STA 476+00 TO STA 481+00

MIA-41-10.32

31 / 33

183 / 194

S:\CIN\4300--4399\4354\004\Drawings\CAD\110253\row\sheets\10253RB008.dgn 10/1/2021 4:39:43 PM Allisonw

MIAMI COUNTY
CONCORD TOWNSHIP
CITY OF TROY
SEC. 20 & 21, T. 5 N., R. 6 E.
CONGRESS LANDS WEST OF THE MIAMI RIVER

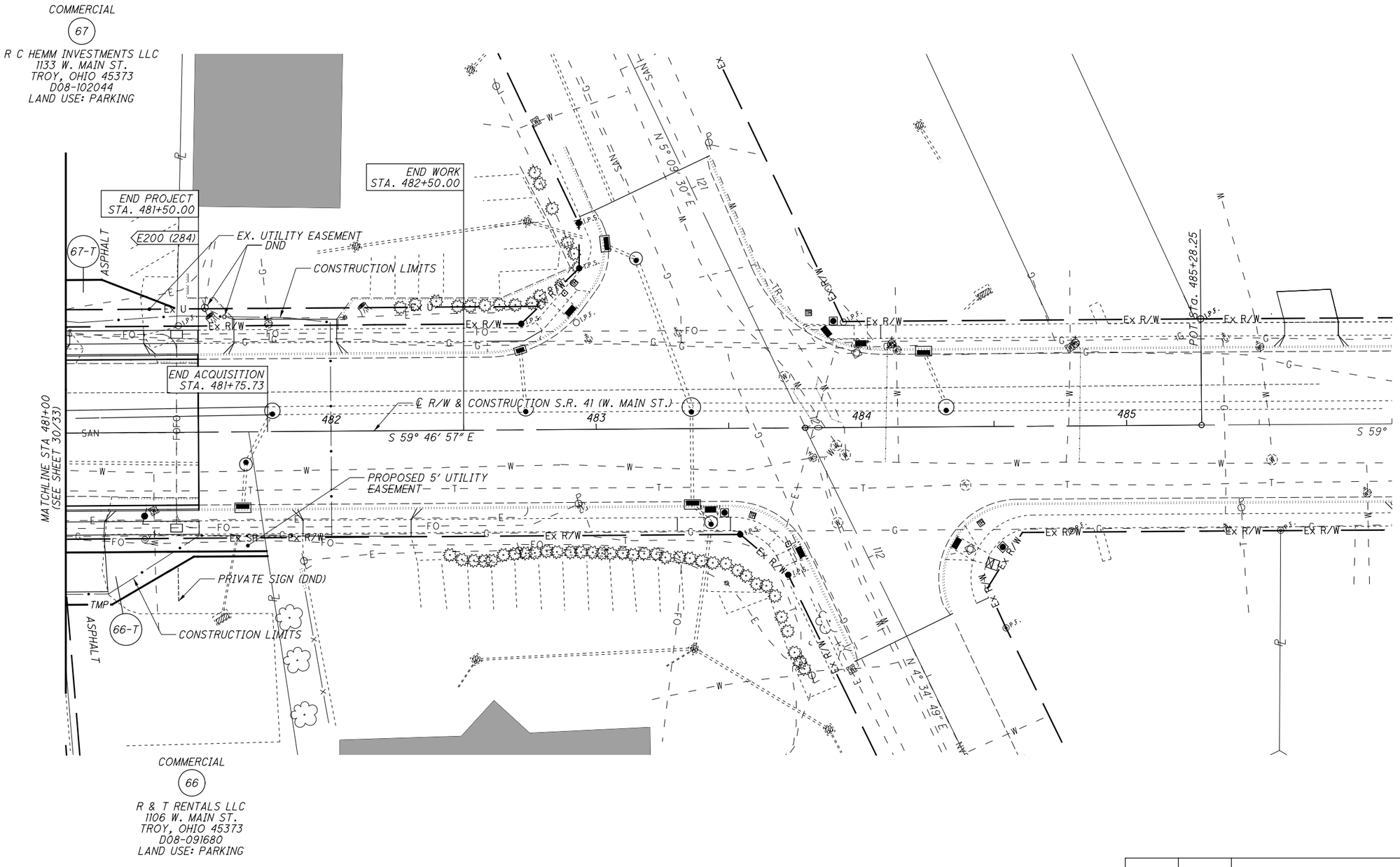

SUBDIVISIONS:

PLAT OF THE CITY OF TROY, OHIO
OUTLOTS: 72

INLOTS 7941

REV. BY	DATE	DESCRIPTION

DATE COMPLETED

HORIZONTAL SCALE IN FEET
0 10 20 40

PID NO. 110253

R/W DESIGNER BJO
R/W REVIEWER JCS

RIGHT OF WAY TOPO SHEET
STA 481+00 TO STA 486+00

MIA-41-10.32

32 / 33

184
194

S:\CIN\4300--4399\4354\004\Drawings\CAD\110253\row\sheets\10253RT009.dgn 10/1/2021 4:39:44 PM Allisonw

MIAMI COUNTY
CONCORD TOWNSHIP
CITY OF TROY
SEC. 20 & 21, T. 5 N., R. 6 E.
CONGRESS LANDS WEST OF THE MIAMI RIVER

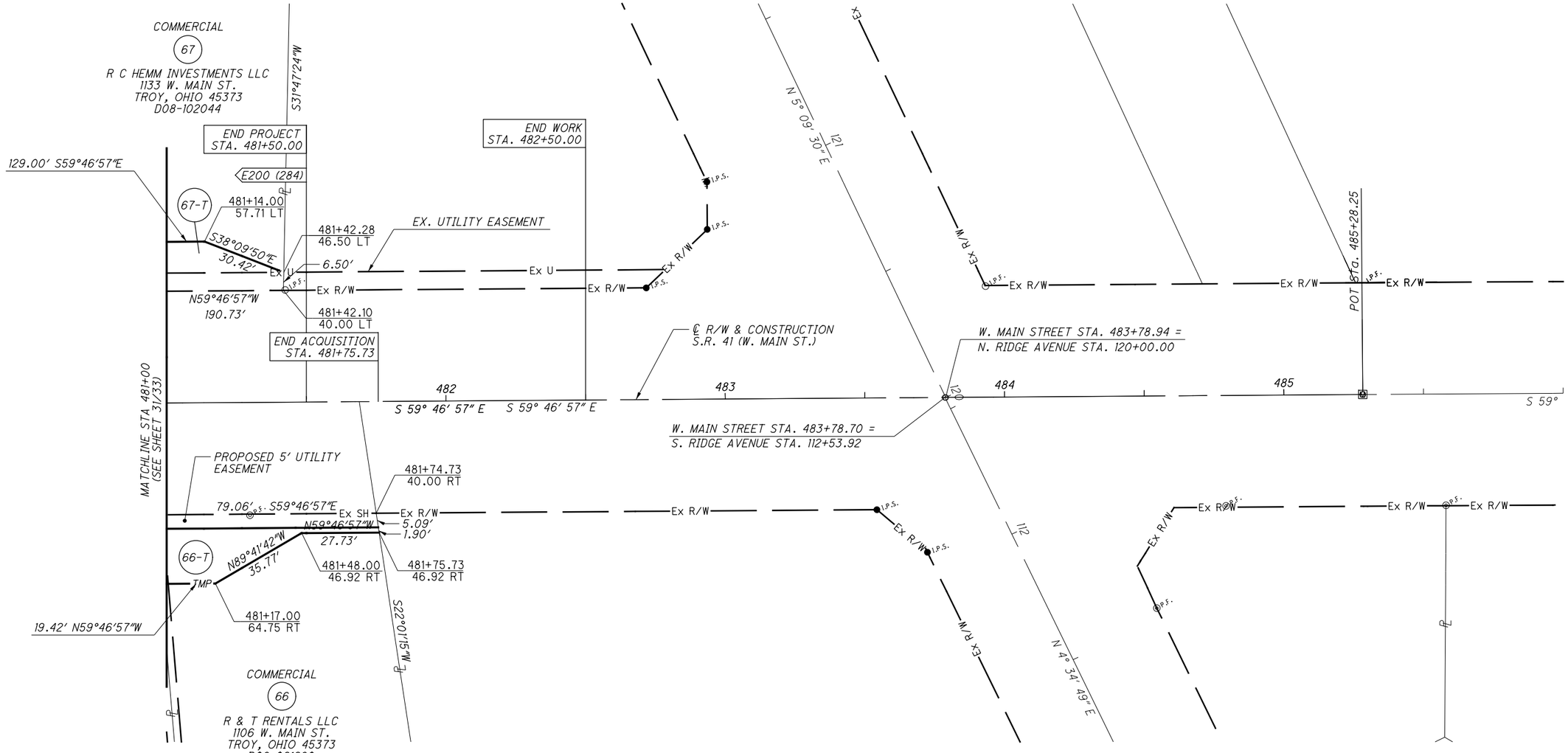

SUBDIVISIONS:

PLAT OF THE CITY OF TROY, OHIO
OUTLOTS: 72

INLOTS: 7941

REV. BY	DATE	DESCRIPTION

DATE COMPLETED

HORIZONTAL SCALE IN FEET
0 10 20 40

PID NO. 110253

R/W DESIGNER BJO
R/W REVIEWER JCS

RIGHT OF WAY BOUNDARY SHEET
STA 481+00 TO STA 486+00

MIA-41-10.32

33 / 33

185
194

S:\CIN\4300--4399\4354\004\Drawings\CAD\110253\row\sheets\10253RB009.dgn 10/1/2021 4:39:45 PM Allisonw

PROJECT DESCRIPTION

AS A FOLLOW-UP TO THE INITIAL PHASE 1 IMPROVEMENTS THAT EXTEND FROM RIDGE AVENUE TO MARKET STREET, THE PHASE 2 IMPROVEMENTS COMPLETE THE BALANCE OF THE PROJECT LIMITS FROM INTERSTATE 75 TO RIDGE AVENUE, MORE SPECIFICALLY FROM STATION 442+14.95 TO STATION 481+50.00. PHASE 2 SIMILARLY INCLUDES ROADWAY WIDENING, RESURFACING, AND UTILITY IMPROVEMENTS, BUT ALSO INCLUDES AN EXTENSION OF AN EXISTING BOX CULVERT JUST EAST OF SR-41/NORWICH ROAD INTERSECTION ALONG SR 41 BETWEEN IN TROY, OHIO. THE EXISTING CULVERT IS A PRECAST REINFORCED BOX STRUCTURE THAT IS LOCATED AT APPROXIMATE STATION 460+50 AND WILL BE EXTENDED APPROXIMATELY 16 FEET AT ITS UPSTREAM END. THE ESTIMATED LENGTH OF THE PHASE 2 IMPROVEMENTS IS APPROXIMATELY 0.75 MILES.

HISTORIC RECORDS

WE REVIEWED THE ODOT TRANSPORTATION INFORMATION MAPPING SYSTEM (TIMS) AND FOUND SIX HISTORIC BORINGS EITHER WITHIN OR IN VERY CLOSE PROXIMITY TO THE PHASE 2 PROJECT LIMITS.

1) FOUR BORINGS WERE PART OF MIA-25-4.29 PROJECT, DATED 1955.
2) TWO STRUCTURAL BORINGS WERE PART OF MIA-41-10.85 PROJECT, DATED 2000.

GEOLOGY

THE PROJECT SITE IS LOCATED WITHIN THE SOUTHERN OHIO LOAMY TILL PLAIN. BASED ON THE PHYSIOGRAPHIC REGIONS MAP OF OHIO, THIS TILL TYPICALLY CONSISTS OF LOAMY, HIGH-LIME WISCONSINAN-AGE TILL, OUTWASH, AND LOESS OVER LOWER PALEOZOIC-AGE CARBONATE ROCKS.

THE SURFICIAL GEOLOGY OF THE OHIO PORTION OF THE PIQUA 30X60 MINUTE QUADRANGLE MAP IDENTIFIES THE SOILS ALONG THE PHASE 2 ALIGNMENT AS AN UNSORTED MIX OF SILT, CLAY, SAND, GRAVEL AND BOULDERS (T) OVER SAND (S). BOTH THE UNSORTED MIX (T) AND SAND (S) ARE OF WISCONSINAN-AGE DEPOSITION, THOUGH THE SAND IS TYPICALLY WELL TO MODERATELY SORTED IN GRADATION IN COMPARISON TO THE OVERLYING UNSTRATIFIED AND UNSORTED MIX OF GLACIALLY DEPOSITED SOILS THAT POSSESS A MUCH WIDER RANGE OF PARTICLES SIZES. THE OVERLYING UNSORTED MIX WAS DEPOSITED DIRECTLY FROM MULTIPLE GLACIAL ADVANCEMENTS, AND AS SUCH CAN POSSESS SURFACES THAT ARE WAVE-PLANED OR MODIFIED BY LACUSTRINE EROSION AND DEPOSITION. THE SAND (S) CONTAINS OCCASIONAL GRAVEL OR THIN SILT SEAMS AND AS A WHOLE ARE FOUND TO BE DEPOSITED FINELY STRATIFIED TO MASSIVE WITH OCCASIONAL CROSS-BEDDING.

BASED ON THE BEDROCK GEOLOGIC MAP OF OHIO, THE OVERLYING SURFICIAL SOILS ARE UNDERLAIN BY LOWER SILURIAN-AGE DOLOMITE, LIMESTONE, AND SHALE MAPPED LOCALLY AS PART OF THE CLINTON AND CATARACT GROUPS, UNDIFFERENTIATED (SC), ALONG THE WESTERN HALF OF THE PHASE 2 ALIGNMENT WHILE THE EASTERN HALF WAS MAPPED AS THE CINCINNATI GROUP CONSISTING OF UPPER ORDOVICIAN-AGE INTERBEDDED SHALE, LIMESTONE, AND DOLOMITE (OC).

AS THE DOMINANT ROCK TYPES IN THE CLINTON AND CATARACT GROUPS, BOTH THE DOLOMITE AND LIMESTONE LAYERS ARE GRAY TO OLIVE-GREEN AND YELLOW, GENERALLY FOUND TO BE FINELY TO COARSELY CRYSTALLINE, AND OCCURRING IN LAMINATIONS TO THICK BEDS. WHERE PRESENT AS THIN INTERBEDS, THE SHALE IS GREENISH-GRAY, SILTY, AND LOCALLY DOLOMITIC.

THE CINCINNATI GROUP CONSISTS OF INTERBEDDED SHALE, LIMESTONE, AND DOLOMITE. THE SHALE IN THE CINCINNATI GROUP GRADES IN COLOR FROM GRAY TO OLIVE, RED, AND GREEN AND IS CALCAREOUS AND DOLOMITIC WITH OCCASIONAL HIGHER CONCENTRATIONS OF SILT. THE CINCINNATI GROUP LIMESTONE IS GRAY AND OLIVE, CRYSTALLINE WITH THIN TO MEDIUM, IRREGULAR TO WAVY BEDDING AND CAN BE ARGILLACEOUS. THE DOLOMITE IS OLIVE AND YELLOWISH-GRAY, CRYSTALLINE, THIN TO MEDIUM THICK BEDDING AND SIMILARLY ARGILLACEOUS.

RECONNAISSANCE

A FIELD RECONNAISSANCE FOR THE PROJECT AREA WAS CONDUCTED BY A GEOTECHNICAL ENGINEER WITH GEOTECHNOLOGY ON FEBRUARY 19, 2019. DURING OUR FIELD RECONNAISSANCE, NO GEOHAZARDS WERE OBSERVED WITHIN THE IMMEDIATE VICINITY OF THE PROPOSED SITE. THE PROJECT IS LOCATED IN RESIDENTIAL AND COMMERCIAL AREAS.

THE EXISTING PAVEMENT OBSERVED WITHIN PHASE 2 APPEARED TO BE IN FAIR CONDITION WITH SIGNS OF LOW TO MEDIUM WEATHERING. PAVEMENT WEAR INCLUDES OCCASIONAL LOW TO MEDIUM SEVERITY, TRANSVERSE, LONGITUDINAL AND ALLIGATOR CRACKING. NO STANDING WATER WAS OBSERVED NEAR THE PAVEMENT AREA.

AN EXISTING FOUR-SIDED, CONCRETE BOX CULVERT WAS OBSERVED TO CONVEY NORTH FLOWING STORMWATER BENEATH WEST MAIN STREET AT APPROXIMATE STA. 460+50. THE INLET AND OUTLET ARE POSITIONED IN AN OPEN GRASSY/ROCK AREA. EXISTING EMBANKMENT SLOPES ON BOTH SIDES APPEARED TO BE STABLE AND IN GOOD CONDITION. CONCRETE WEAR WAS NOT OBSERVED. OVERALL, THE CULVERT APPEARED TO BE IN GOOD CONDITION, PROPERLY FUNCTIONING AND DRAINING WELL.

SUBSURFACE EXPLORATION

THE SUBSURFACE EXPLORATION WAS CONDUCTED WITHIN THE LIMITS OF BOTH PHASES UNDER 1 MOBILIZATION AND CONSISTED OF 20 BORINGS NUMBERED B-001-0-19 THROUGH B-020-0-19. BORINGS B-013 THROUGH B-020 WERE DRILLED WITHIN THE LIMITS OF PHASE 1 WHILE BORINGS B-001 THROUGH B-012 WERE DRILLED WITHIN THE LIMITS OF PHASE 2.

THE BORINGS WERE DRILLED BETWEEN FEBRUARY 28 AND MARCH 1, 2019 WITH A CME 550X DRILL RIG ADVANCING HOLLOW-STEM AUGERS. SAMPLING OF THE OVERBURDEN SOILS AND AUGERABLE PORTION OF THE UPPER BEDROCK WAS ACCOMPLISHED AHEAD

PROJECT LEGEND

DESCRIPTION	ODOT CLASS	CLASSIFIED MECH.	CLASSIFIED VISUAL
GRAVEL AND/OR STONE FRAGMENTS	A-1-a	3	3
GRAVEL AND/OR STONE FRAGMENTS WITH SAND	A-1-b	2	5
GRAVEL WITH SAND AND SILT	A-2-4	1	0
SANDY SILT	A-4a	11	22
SILT AND CLAY	A-6a	3	9
SILTY CLAY	A-6b	4	9
	TOTAL	24	48
DOLOMITE	VISUAL		
PAVEMENT OR BASE = X = APPROXIMATE THICKNESS	VISUAL		
SOD AND TOPSOIL = X = APPROXIMATE THICKNESS	VISUAL		

BORING LOCATION - PLAN VIEW.

BORING LOCATION - PLAN VIEW.

DRIVE SAMPLE AND/OR ROCK CORE BORING PLOTTED TO VERTICAL SCALE ONLY. HORIZONTAL BAR INDICATES A CHANGE IN STRATIGRAPHY.

WC INDICATES WATER CONTENT IN PERCENT.

N_{60} INDICATES STANDARD PENETRATION RESISTANCE NORMALIZED TO 60% DRILL ROD ENERGY RATIO.

X/Y/D" NUMBER OF BLOWS FOR STANDARD PENETRATION TEST (SPT):
X= NUMBER OF BLOWS FOR 6 INCHES (UNCORRECTED).
Y/D"= NUMBER OF BLOWS (UNCORRECTED) FOR D" OF PENETRATION AT REFUSAL.

X/Y/Z NUMBER OF BLOWS FOR STANDARD PENETRATION TEST (SPT):
X= NUMBER OF BLOWS FOR FIRST 6 INCHES.
Y= NUMBER OF BLOWS FOR SECOND 6 INCHES.
Z= NUMBER OF BLOWS FOR THIRD 6 INCHES.

W— INDICATES FREE WATER ELEVATION.

SS INDICATES A SPLIT SPOON SAMPLE.

NP INDICATES A NON-PLASTIC SAMPLE.

● INDICATES A PLASTIC MATERIAL WITH A MOISTURE CONTENT EQUAL TO OR GREATER THAN THE LIQUID LIMIT MINUS 3.

* INDICATES A SAMPLE TAKEN WITHIN 3 FT OF PROPOSED GRADE.

TR INDICATES TOP OF ROCK.

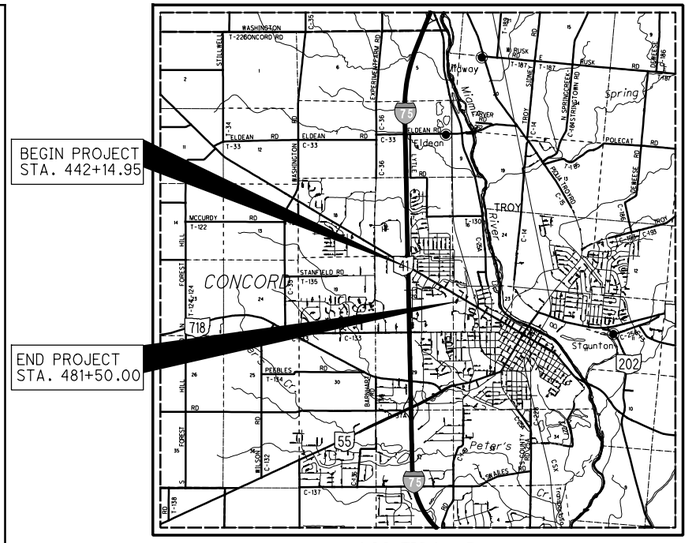

LOCATION MAP

SCALE IN MILES

0 1 2 3 4

N

PARTICLE SIZE DEFINITIONS

12"	3"	2.0 mm	0.42 mm	0.074 mm	0.005 mm
BOULDERS	COBBLES	GRAVEL	COARSE SAND	FINE SAND	SILT	CLAY
		No. 10 SIEVE	No. 40 SIEVE	No. 200 SIEVE	

HISTORIC LEGEND (2000 BORINGS)

DESCRIPTION	ODOT CLASS	CLASSIFIED MECH.	CLASSIFIED VISUAL
GRAVEL AND/OR STONE FRAGMENTS	A-1-a	1	0
SANDY SILT	A-4a	1	0
SILT AND CLAY	A-6a	1	4
SILTY CLAY	A-6b	1	4
	TOTAL	4	8
LIMESTONE	VISUAL		

INDEX OF SHEETS

SUMMARY OF SOIL TEST DATA, 3

LOCATION FROM STA.	LOCATION TO STA.	PLAN VIEW SHEET	PROFILE SHEET	CUT MAX.		FILL EMB. MAX.	
WEST MAIN STREET (SR 41)							
BEGIN	454+50	4	4	0.0	FT	0.1	FT
454+50	467+50	5	5	0.0	FT	0.2	FT
467+50	END	6	6	0.0	FT	0.3	FT
CULVERT							
STA. 460+50		7	7	-	FT	-	FT

RECON TMS 02/21/19
DRILLING - JG 02/27/19 - 03/01/19
DRAWN - GL 04/06/20 - 04/15/20
REVIEWED - SPR 04/15/20

DESIGN AGENCY
GEOTECHNOLOGY INC
FROM THE GROUND UP

PID NO. 110253

SOIL PROFILE - ROADWAY

MIA-41-10.32

161/169

\\10.12.10\cin\Data\Projects\J033\J033897.01-West Main Street (SR41) Corridor Improve\Sheets\108662_ICO01_Phase 2.dgn Sheet 2/24/2021 2:08:25 PM rbach

\\10.12.10\cin\data\projects\J033\J033897.01-West Main Street (SR4) Corridor Improve\Sheets\J033897.01 - Phase 2\dgn\108662_IC002_Phase 2.dgn Sheet 2/24/2021 2:14:07 PM rbach

SUBSURFACE EXPLORATION (CONTINUED)

OF THE AUGERS WITH 2-INCH-OUTSIDE-DIAMETER SPLIT-BARREL SAMPLERS IN GENERAL ACCORDANCE WITH THE PROCEDURES OUTLINED BY ASTM D1586. STANDARD PENETRATION TESTS (SPTS) WERE PERFORMED ON THE SPLIT-SPOON SAMPLES TO OBTAIN THE STANDARD PENETRATION RESISTANCE OF THE SAMPLED MATERIAL. THE AUTOMATIC HAMMER WAS CALIBRATED ON MARCH 31, 2018 AND THE ENERGY RATIO WAS DETERMINED TO BE 77 PERCENT.

EXPLORATION FINDINGS

PAVEMENT SUBGRADE SOILS:
THE TOPSOIL OR EXISTING PAVEMENT WAS UNDERLAIN BY FILL, NATIVE COHESIVE AND/OR GRANULAR SOILS. TOPSOIL WAS ENCOUNTERED AT THE GROUND SURFACE IN THOSE BORINGS DRILLED BEYOND THE WIDTH OF THE EXISTING PAVEMENT (BORINGS B-004 AND B-012) AND RANGED BETWEEN 6 TO 8 INCHES THICK. THE EXISTING PAVEMENT SECTION AS ENCOUNTERED BENEATH THE GROUND SURFACE IN TEN (10) OF THE PHASE 2 BORINGS GENERALLY CONSISTED OF ASPHALTIC CONCRETE (ASPHALT) WITH OR WITHOUT AGGREGATE BASE. THE ONLY EXCEPTIONS OCCURRED IN BORINGS B-006 AND B-008 WHERE PORTLAND CEMENT CONCRETE (CONCRETE) WAS ENCOUNTERED BENEATH THE GROUND SURFACE.

THE SUBGRADE SOILS ENCOUNTERED WITHIN THE PHASE 2 PROJECT LIMITS CONSISTED OF 71 PERCENT GRANULAR MATERIALS AND 29 PERCENT COHESIVE MATERIALS AS DETERMINED FROM ODOT GB-1 ANALYSES. THE GRANULAR MATERIALS WERE CLASSIFIED AS: 1) GRAVEL AND STONE FRAGMENTS (A-1-a); 2) GRAVEL AND STONE FRAGMENTS WITH SAND (A-1-b); 3) GRAVEL AND STONE FRAGMENTS WITH SAND AND SILT (A-2-4); AND 4) SANDY SILT (A-4a) ACCORDING TO ODOT $^{5}/_{32}$S SOIL CLASSIFICATION SYSTEM. WITH RESPECT TO THE SOIL DENSITY, THE GRANULAR SOILS CAN BE CHARACTERIZED AS HAVING A RELATIVE DENSITY RANGING FROM VERY LOOSE TO VERY DENSE, CORRELATING TO CONVERTED SPT-N VALUES (N60) BETWEEN 8 AND 90 BLOWS PER FOOT. IT SHOULD BE NOTED THAT N60 VALUES WERE ELEVATED IN SEVERAL SAMPLES DUE TO THE PRESENCE OF GRAVEL AND/OR STONE FRAGMENTS THAT WERE LARGE THAN THE OPENING OF THE SAMPLER. THE NATURAL MOISTURE CONTENT OF REPRESENTATIVE SAMPLES RANGED FROM 7 TO 23 PERCENT. SEVERAL PARTICLE SIZE ANALYSES WERE PERFORMED ON REPRESENTATIVE SAMPLES OF THE GRANULAR SUBGRADE SOILS WITH MATERIAL PROPORTIONS RANGING FROM 13% TO 75% GRAVEL, 19% TO 36% SAND, 4% TO 40% SILT, AND 2% TO 30% CLAY.

COHESIVE SUBGRADE MATERIALS WERE CLASSIFIED AS SILT & CLAY (A-6a) AND SILTY CLAY (A-6b). WITH RESPECT TO SOIL STRENGTH, THE COHESIVE SOILS ENCOUNTERED CAN BE CHARACTERIZED AS SOFT TO VERY STIFF IN CONSISTENCY BASED ON HAND PENETROMETER (HP) READINGS RANGING FROM 0.5 TONS PER SQUARE FOOT (TSF) TO 4.0 TSF AND N60 VALUES BETWEEN 3 BPF AND 21 BPF. THE NATURAL MOISTURE CONTENTS OF REPRESENTATIVE SAMPLES RANGED FROM 11 TO 27 PERCENT. BASED ON ATTERBERG LIMIT TESTS PERFORMED ON REPRESENTATIVE SAMPLES OF THE SUBGRADE SOILS OBTAINED ALONG THE PROJECT ROADWAY, THE LIQUID AND PLASTIC LIMITS OF THE COHESIVE SOILS RANGED FROM 31 TO 39 PERCENT AND FROM 18 TO 21 PERCENT, RESPECTIVELY.

CULVERT:
AT THE PROPOSED CULVERT EXTENSION, THREE DIFFERENT MATERIALS WERE IDENTIFIED BELOW THE PAVEMENT SECTION. IN GENERAL, THE SUBSURFACE MATERIALS ENCOUNTERED AT THE LOCATION OF THE CULVERT EXTENSION CONSISTED OF: 1) EMBANKMENT FILL SOILS, 2) NATIVE RESIDUAL SOILS, AND 3) BEDROCK.

THE FILL SOILS WERE ENCOUNTERED IMMEDIATELY BELOW THE PAVEMENT AND EXTENDED TO A DEPTH OF 9.5 FEET IN BOTH BORINGS. THE FILL SOILS ENCOUNTERED IN B-006 CONSISTED OF COHESIVE AND GRANULAR MATERIALS, WHILE FILL SOILS IN B-007 CONSIST OF GRANULAR SOILS. LOOSE, GRAY, GRANULAR FILL CONSISTING OF STONE FRAGMENTS (A-1-a) WAS ENCOUNTERED BENEATH THE PAVEMENT AND EXTENDED TO A DEPTH OF 2.8 FEET. AN N60 VALUE OF 6 BPF WAS RECORDED IN THIS LAYER ALONG WITH A NATURAL MOISTURE CONTENT OF 8 PERCENT. THIS LAYER OF STONE FRAGMENTS WAS UNDERLAIN BY A LAYER OF SOFT TO MEDIUM STIFF, DARK BROWN AND GRAY, SILTY CLAY (A-6b). THE N60 VALUES IN THIS COHESIVE FILL LAYER RANGED BETWEEN 5 AND 6 BPF WITH NATURAL MOISTURE CONTENTS RANGING FROM 16 TO 29 PERCENT. THE FILL ENCOUNTERED IN BORING B-007 CAN BE DESCRIBED AS MEDIUM DENSE TO DENSE, GRAY AND BROWN, COHESIONLESS STONE FRAGMENTS (A-1-a). THE N60 VALUES OF THE FILL IN BORING B-007 GENERALLY RANGED BETWEEN 13 AND 30 BPF. THE NATURAL MOISTURE CONTENTS OF REPRESENTATIVE SAMPLES OF THE COHESIONLESS FILL RANGED FROM 5 TO 9 PERCENT.

NATIVE RESIDUAL SOILS, CONSISTING OF SEVERELY/COMPLETELY WEATHERED DOLOMITE BEDROCK AND CLASSIFYING AS STONE FRAGMENTS (A-1A) AND STONE FRAGMENTS WITH SAND (A-1-b), WERE ENCOUNTERED BENEATH EXISTING FILL AND EXTENDED TO THE UNDERLYING BEDROCK, APPROXIMATELY 12 TO 14.5 FEET BELOW PAVEMENT LEVEL. THE THICKNESS OF THE NATIVE RESIDUAL SOILS RANGED FROM APPROXIMATELY 2.5 (B-007) TO 5 FEET (B-006). SPLIT-SPOON REFUSAL WAS ENCOUNTERED IN ALL THREE OF THE SPT SAMPLES ATTEMPTED IN THIS LAYER.

THE EXISTING FILL AND NATIVE OVERBURDEN SOILS IN THE VICINITY OF THE CULVERT EXTENSION IS UNDERLAIN BY DOLOMITE BEDROCK. THE BEDROCK WAS ENCOUNTERED IN EACH CULVERT BORING AT DEPTHS BETWEEN 12 AND 14.5 FEET BELOW THE EXISTING GRADE (EL. 854.2 FEET TO EL. 856.0 FEET). THE BEDROCK CAN BE DESCRIBED AS GRAY, SLIGHTLY TO UNWEATHERED, MODERATELY TO VERY STRONG.

BEDROCK WAS NOT ENCOUNTERED IN THE PAVEMENT SUBGRADE BORINGS.

WITH THE EXCEPTION OF BORINGS B-005, B-009, B-010 AND B-012, GROUNDWATER WAS ENCOUNTERED IN PHASE 2 BORINGS DURING DRILLING AND RANGED BETWEEN 5.5 TO 10.0 FEET (EL. 843.1 FEET TO EL. 883.5 FEET).

SPECIFICATIONS

THIS GEOTECHNICAL EXPLORATION WAS PERFORMED IN ACCORDANCE WITH THE STATE OF OHIO, DEPARTMENT OF TRANSPORTATION, OFFICE OF GEOTECHNICAL ENGINEERING, SPECIFICATIONS FOR GEOTECHNICAL EXPLORATIONS, DATED JULY 2018.

AVAILABLE INFORMATION

ALL AVAILABLE SOIL AND BEDROCK INFORMATION THAT CAN BE CONVENIENTLY SHOWN ON THE GEOTECHNICAL EXPLORATION SHEETS HAS BEEN SO REPORTED. ADDITIONAL EXPLORATIONS MAY HAVE BEEN MADE TO STUDY SOME SPECIAL ASPECT OF THE PROJECT. COPIES OF THIS DATA, IF ANY, MAY BE INSPECTED IN THE DISTRICT 7 OFFICE AT 1001 ST. MARYS AVENUE, SIDNEY, OHIO 45365.

D_{50} VALUES					
BORING NO.	SAMPLE NO.	DEPTH (FT)	ELEVATION (FT)	D_{50} (MM)	ODOT CLASS
B-006-0-19	SS-1	1.3 - 2.8	867.4 - 865.9	9.67	A-1-a
	SS-3	5.0 - 6.5	863.7 - 862.2	0.02	A-6b
B-007-0-19	SS-1	1.0 - 2.5	867.0 - 865.5	4.07	A-1-a
	SS-2	2.5 - 4.0	865.5 - 864.0	3.38	A-1-a

DESIGN AGENCY
GEOTECHNOLOGY INC
FROM THE GROUND UP

PID NO. 110253

SOIL PROFILE - ROADWAY

MIA-41-10.32

PROJECT SUMMARY OF SOIL TEST DATA
WEST MAIN STREET (SR 41)

EXPLORATION NO., STATION & OFFSET	FROM	TO	SAMPLE ID	N60	% REC	HP tsf	% GR	% CS	% FS	% SILT	% CLAY	LL	PL	PI	% WC	ODOT CLASS (GI)	ppm SO4
B-001-0-19	1.30	2.80	SS-1	9	78	1.50	15	8	15	32	30	NP	NP	NP	23	A-4a (5)	660
STA. 441+80, 29' LT.	2.80	4.30	SS-2	24	83	-	48	18	15	12	7	NP	NP	NP	15	A-1-b (0)	
LATITUDE = 40.051557	4.30	5.80	SS-3	9	100	0.80	MEDIUM STIFF, DARK BROWN, SILTY CLAY								27	A-6b (VISUAL)	
LONGITUDE = -84.230565	5.80	7.30	SS-4	13	72	1.50	MEDIUM STIFF TO STIFF, BROWN, SILTY CLAY								24	A-6b (VISUAL)	
	7.30	8.80	SS-5	3	44	1.00	SAME AS SS-4								26	A-6b (VISUAL)	
	8.80	10.30	SS-6	5	100	1.00	SAME AS SS-4								12	A-6b (VISUAL)	
B-002-0-19	1.20	2.70	SS-1	39	50	-	21	12	24	29	14	17	14	3	9	A-4a (2)*	400
STA. 445+47, 20' RT.	2.70	4.20	SS-2	76	100	-	SAME AS SS-1								7	A-4a (VISUAL)*	
LATITUDE = 40.050940	4.20	5.70	SS-3	21	100	-	13	11	20	37	19	17	15	2	11	A-4a (4)	
LONGITUDE = -84.229510	5.70	7.20	SS-4	21	78	1.50	STIFF, BROWN, SANDY SILT								11	A-4a (VISUAL)	
	7.20	8.70	SS-5	19	56	1.50	SAME AS SS-4								10	A-4a (VISUAL)	
	8.70	10.20	SS-6	35	100	1.50	SAME AS SS-4								9	A-4a (VISUAL)	
B-003-0-19	0.80	2.30	SS-1	28	72	-	47	22	12	13	6	17	14	3	12	A-1-b (0)*	520
STA. 449+33, 19' LT.	2.30	3.80	SS-2	37	67	-	SAME AS SS-1								10	A-1-b (VISUAL)*	
LATITUDE = 40.050504	3.80	5.30	SS-3	19	67	2.00	28	13	19	25	15	16	13	3	10	A-4a (1)	
LONGITUDE = -84.228248	5.30	6.80	SS-4	30	100	2.00	SAME AS SS-3								12	A-4a (VISUAL)	
	6.80	8.30	SS-5	32	100	1.50	SAME AS SS-3								12	A-4a (VISUAL)	
	8.50	10.00	SS-6	73	78	2.00	SAME AS SS-3								9	A-4a (VISUAL)	
B-004-0-19	0.50	1.50	SS-1B	10	78	1.50	21	7	13	30	29	34	19	15	20	A-6a (7)*	380
STA. 451+52, 47' RT.	1.50	3.00	SS-2	8	83	1.50	25	10	19	27	19	24	16	8	19	A-4a (2)*	
LATITUDE = 40.050074	3.00	4.50	SS-3	14	100	1.80	SAME AS SS-2								16	A-4a (VISUAL)*	
LONGITUDE = -84.227665	4.50	6.00	SS-4	17	100	1.50	SAME AS SS-2								10	A-4a (VISUAL)	
	6.00	7.50	SS-5	13	100	-	VERY STIFF, BROWN, SANDY SILT								12	A-4a (VISUAL)	
	8.50	10.00	SS-6	35	0	-	SAME AS SS-5								-	A-4a (VISUAL)	
B-005-0-19	1.30	2.80	SS-1	18	72	-	33	13	20	23	11	16	14	2	11	A-2-4 (0)*	540
STA. 457+81, 4' LT.	2.80	4.30	SS-2	44	83	-	17	14	23	32	14	16	14	2	9	A-4a (2)*	
LATITUDE = 40.049321	4.30	5.80	SS-3	39	78	-	SAME AS SS-2								9	A-4a (VISUAL)	
LONGITUDE = -84.225638	5.80	7.30	SS-4	46	100	-	SAME AS SS-2								9	A-4a (VISUAL)	
	7.30	8.80	SS-5	27	100	1.50	STIFF TO VERY STIFF, BROWN, SILT AND CLAY								11	A-6a (VISUAL)	
	8.80	10.30	SS-6	45	100	2.00	SAME AS SS-5								10	A-6a (VISUAL)	
B-008-0-19	0.40	1.90	SS-1	12	50	1.50	13	18	17	31	21	26	18	8	23	A-4a (3)*	480
STA. 465+53, 30' RT.	1.90	3.40	SS-2	4	6	-	SAME AS SS-3								11	A-6a (VISUAL)*	
LATITUDE = 40.048201	3.40	4.90	SS-3	4	67	0.50	27	9	16	26	22	31	19	12	18	A-6a (3)	
LONGITUDE = -84.223294	4.90	6.40	SS-4	8	44	1.00	SAME AS SS-3								18	A-6a (VISUAL)	
	6.40	7.50	SS-5A	35	100	-	SAME AS SS-3								-	A-6a (VISUAL)	
	7.50	7.90	SS-5B	35	100	4.00	HARD, BROWN, SILTY CLAY								10	A-6b (VISUAL)	
	8.50	10.00	SS-6	63	100	4.00	SAME AS SS-5								10	A-6b (VISUAL)	
B-009-0-19	1.00	2.50	SS-1	21	100	2.50	20	9	21	23	27	35	18	17	18	A-6b (5)*	500
STA. 468+98, 22' LT.	2.50	4.00	SS-2	37	94	2.00	14	14	21	37	14	17	13	4	9	A-4a (3)*	
LATITUDE = 40.047857	4.00	5.50	SS-3	31	94	2.00	SAME AS SS-2								11	A-4a (VISUAL)	
LONGITUDE = -84.222132	5.50	7.00	SS-4	90	83	3.50	SAME AS SS-2								10	A-4a (VISUAL)	
	7.00	8.50	SS-5	67	100	3.00	SAME AS SS-2								11	A-4a (VISUAL)	
	8.50	9.40	SS-6	31/50/5"	93	3.50	SAME AS SS-2								10	A-4a (VISUAL)	
B-010-0-19	1.00	2.50	SS-1	10	67	2.00	10	6	15	36	33	35	19	16	22	A-6b (9)*	460
STA. 472+87, 19' RT.	2.50	4.00	SS-2	12	28	1.50	STIFF, DARK BROWN, SILT AND CLAY								25	A-6a (VISUAL)*	
LATITUDE = 40.047243	4.00	5.50	SS-3	3	100	0.50	11	10	23	28	28	35	21	14	21	A-6a (6)	
LONGITUDE = -84.220991	5.50	7.00	SS-4	5	78	1.00	MEDIUM STIFF TO STIFF, BROWN, SILT AND CLAY								20	A-6a (VISUAL)	
	7.00	8.50	SS-5	8	100	1.00	SAME AS SS-4								25	A-6a (VISUAL)	
	8.50	10.00	SS-6	14	33	1.00	SAME AS SS-4								22	A-6a (VISUAL)	
B-011-0-19	1.00	2.50	SS-1	17	94	3.00	5	8	16	43	28	39	20	19	20	A-6b (11)*	440
STA. 477+28, 21' LT.	2.50	4.00	SS-2	12	100	2.00	SAME AS SS-1								21	A-6b (VISUAL)*	
LATITUDE = 40.046739	4.00	5.50	SS-3	6	100	0.50	SAME AS SS-4								19	A-4a (VISUAL)	
LONGITUDE = -84.219550	5.50	7.00	SS-4	6	100	0.30	14	10	20	40	16	18	14	4	15	A-4a (4)	
	7.00	8.50	SS-5	59	100	4.00	VERY STIFF TO HARD, BROAWN, SANDY SILT								11	A-4a (VISUAL)	
	8.50	9.40	SS-6	45/50/5"	65	4.00	SAME AS SS-5								11	A-4a (VISUAL)	
B-012-0-19	0.70	1.50	SS-1B	6	83	2.00	13	12	21	29	25	23	15	8	12	A-4a (4)*	380
STA. 480+56, 30' RT.	1.50	3.00	SS-2	14	89	3.00	16	11	19	28	26	24	15	9	12	A-4a (4)*	
LATITUDE = 40.046177	3.00	4.50	SS-3	19	100	3.50	SAME AS SS-2								11	A-4a (VISUAL)*	
LONGITUDE = -84.218616	4.50	6.00	SS-4	44	100	4.00	SAME AS SS-2								10	A-4a (VISUAL)	
	6.00	7.50	SS-5	19	100	-	MEDIUM DENSE TO DENSE, BROWN, GRAVEL W/SAND								16	A-1-b (VISUAL)	
	8.50	10.00	SS-6	41	100	-	SAME AS SS-5								7	A-1-b (VISUAL)	

MIA-41-10.32

SOIL PROFILE - ROADWAY
SUMMARY OF SOIL TEST DATA

DRAWN GL
CHECKED SPR

\\10.1.2.10\cin\Data\Projects\J033\J033897.01-West Main Street (SR41) Corridor Improve\Sheets\J033897.01- Phase 2\dgn\108662_JP001_Phase 2.dgn Sheet 2/24/2021 2:23:44 PM rbach

RESIDENTIAL

COMMERCIAL

BEGIN PROJECT STA. 442+14.95

℄ CONST. W. MAIN ST.

MATCHLINE STA. 454+50

Ex R/W

R/W

B-001-0-19 442

B-001-0-55

B-002-0-55 443 444

B-002-0-19 445

B-003-0-55 446 447

B-003-0-19 448 449

B-004-0-55 450 451

B-004-0-19 452 453 454

B-001-0-19
29' LT.
ASPHALT = 6"
BASE = 10"

B-001-0-55
15' RT.
22 ● 25 ●
11 TR
N WC

9 24 9 13 7 5
23 15 27 24 26 12
N_{60} WC

B-002-0-55
15' RT.
19* 18* ●
30 10
N WC

B-002-0-19
20' RT.
ASPHALT = 7"
BASE = 7"
39 76 51 19 35
9* 7* 11 10 9
N_{60} WC

B-003-0-55
15' RT.
20*
10
N WC

B-003-0-19
19' LT.
ASPHALT = 9"
28 37 19 30 32 73
12* 10* 10 12 12 9
W
N_{60} WC

B-004-0-55
15' RT.
13* 20*
N WC

B-004-0-19
47' RT.
TOPSOIL = 6"
10 8 14 17 13 35
20* 19* 16* 10 12
W
NO REC.
N_{60} WC

NOTE: SURFACE ELEVATIONS OF THE HISTORIC BORINGS WERE ESTIMATED FROM 1955 PROFILE SHEETS FOR MIA-25-4.29

891.07 890.09 889.19 888.37 887.62 886.94 886.34 885.81 885.35 884.97 884.66 884.39 884.13 883.87 883.65 883.42 883.20 882.97 882.75 882.52 882.30 882.06 881.82 881.57 881.32 881.07 880.82 880.57 880.32 880.07 879.82 879.57 879.33 879.11 878.89 878.68 878.49 878.31 878.14 877.98 877.83 877.69 877.55 877.41 877.27 877.14 877.00 876.86 876.72 876.59

896.27 894.21 892.11 890.08 888.42 886.92 885.77 884.93 884.29 883.81 883.42 882.87 882.44 881.97 881.46 880.97 880.46 879.95 879.46 879.01 878.59 878.23 877.90 877.58 877.33 877.00 876.70 876.38

910 900 890 880 870 860 850

442+00 443+00 444+00 445+00 446+00 447+00 448+00 449+00 450+00 451+00 452+00 453+00 454+00

N

0 25 50 100
HORIZONTAL SCALE IN FEET

DRAWN GL CHECKED SPR

SOIL PROFILE - ROADWAY
BEGIN TO STA. 454+50 WEST MAIN STREET (SR 41)

MIA-41-10.32

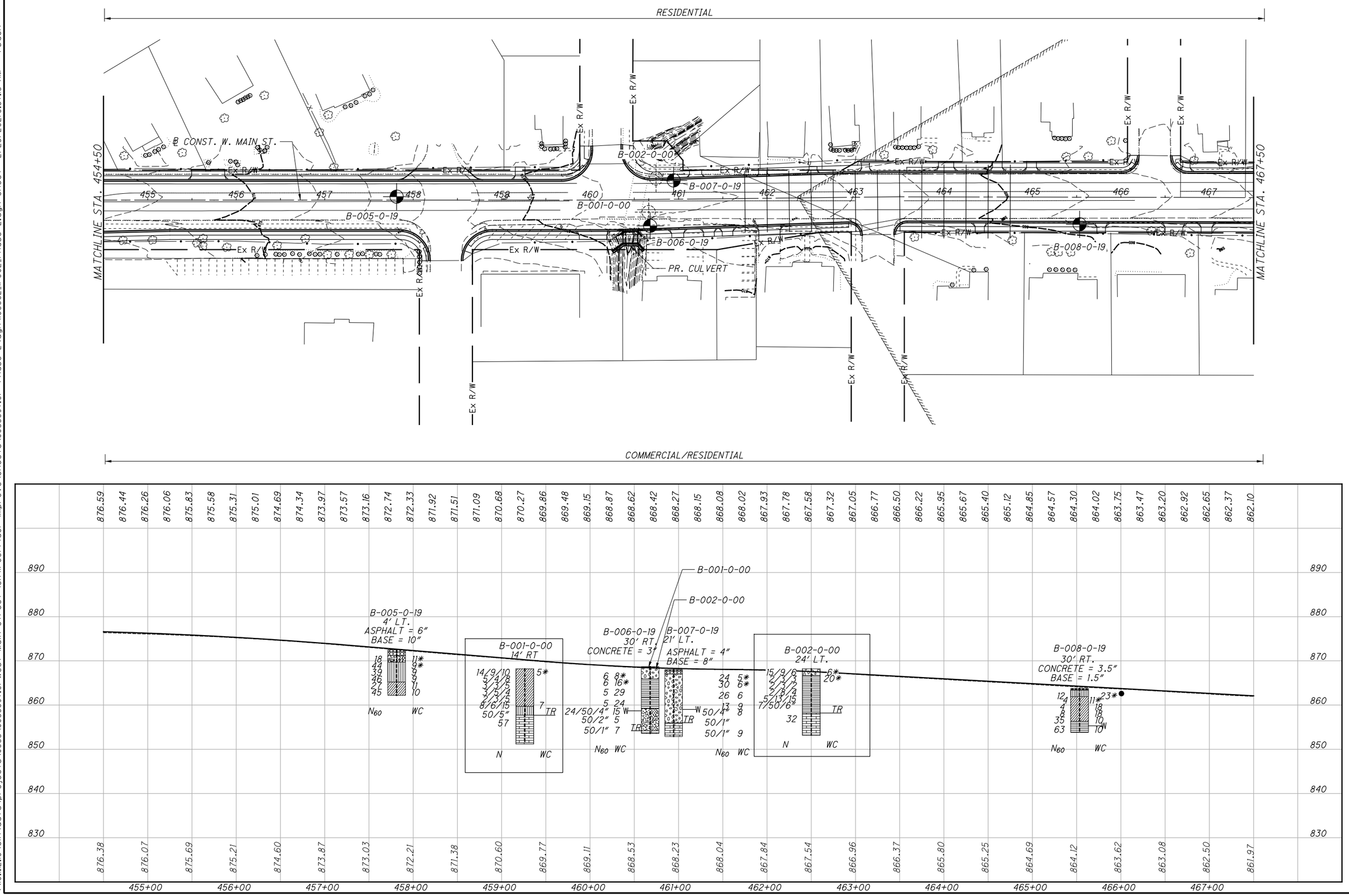

HORIZONTAL SCALE IN FEET
0 25 50 100

DRAWN GL
CHECKED SPR

SOIL PROFILE - ROADWAY

STA. 454+50 TO STA. 467+50 WEST MAIN STREET (SR 41)

MIA-41-10.32

\\10.1.12.10\cin\data\projects\J033\J033897.01-West Main Street (SR41) Corridor Improve\Sheets\J033897.01- Phase 2\dgn\108662_IP002_Phase 2.dgn Sheet 2/25/2021 8:37:13 AM rbach

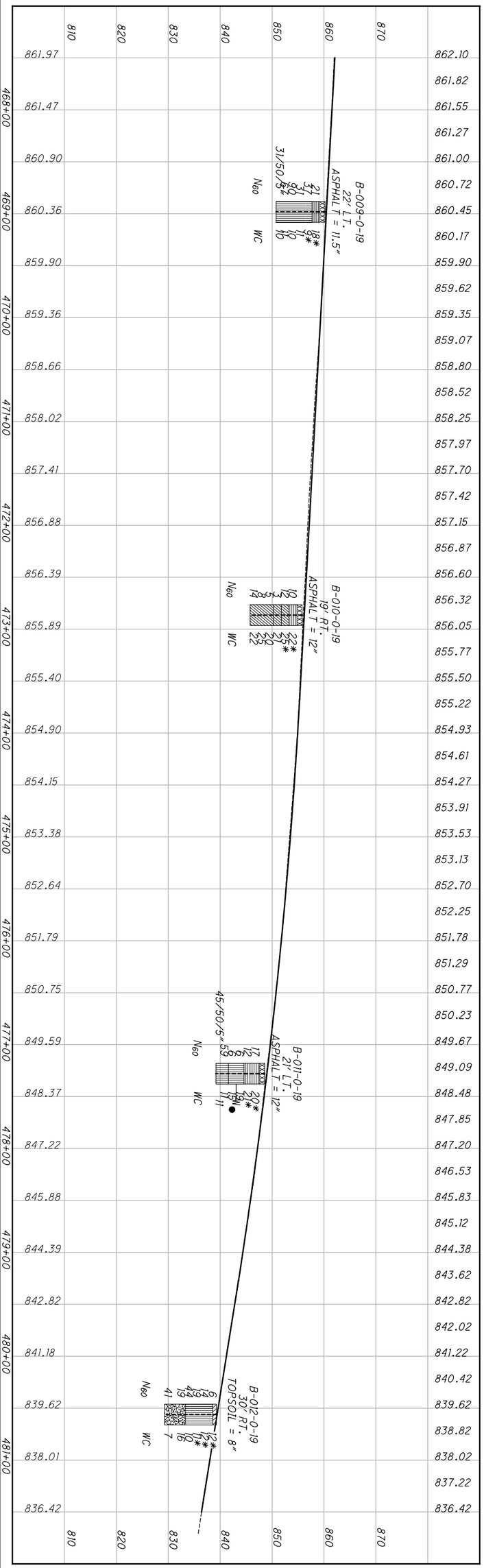

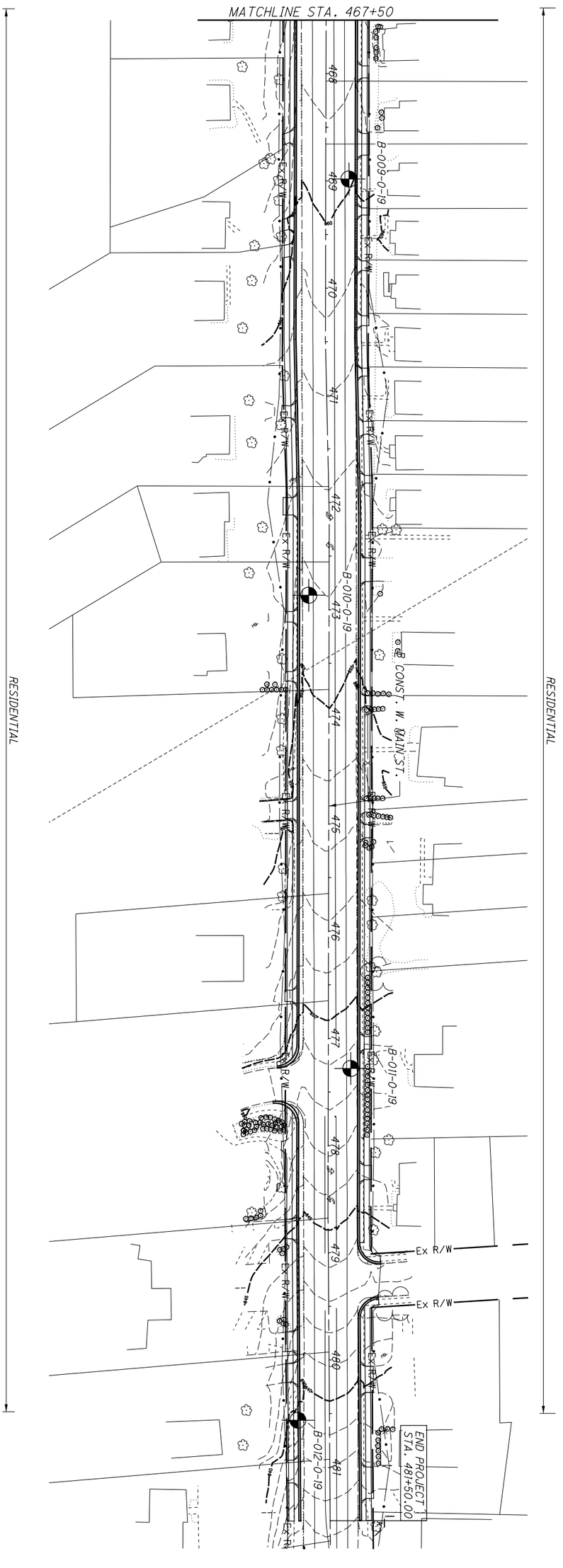

166/169	MIA-41-10.32	SOIL PROFILE - ROADWAY STA. 467+50 TO STA. 481+50 WEST MAIN STREET (SR 41)	DRAWN GL CHECKED SPR	0 50 25 100 HORIZONTAL SCALE IN FEET	

HORIZONTAL SCALE IN FEET
0 5 10 20

DRAWN GL
CHECKED SPR

SOIL PROFILE - CULVERT
CULVERT MIA-41-1085 OVER MORGAN DITCH

MIA-41-10.32

167/169

\\10.1.12.10\cin\data\projects\033\033897.01-West Main Street (SR41) Corridor Improve\Sheets\033897.01- Phase 2\dgn\108662_ZP001_Phase 2.dgn Sheet 2/25/2021 11:2:16 AM rbach

PROJECT: MIA-41-10.32 | DRILLING FIRM / OPERATOR: GEOTECH / JG | DRILL RIG: CME-550X | STATION / OFFSET: 460+68, 30' RT. | EXPLORATION ID B-006-0-19
TYPE: ROADWAY / CULVERT | SAMPLING FIRM / LOGGER: GEOTECH / LF | HAMMER: AUTOMATIC HAMMER | ALIGNMENT: W. MAIN ST.
PID: 110253 SFN: | DRILLING METHOD: CFA | CALIBRATION DATE: 3/31/18 | ELEVATION: 868.7 (NAVD) EOB: 15.1 ft. | PAGE 1 OF 1
START: 2/27/19 END: 2/27/19 | SAMPLING METHOD: SPT | ENERGY RATIO (%): 77 | LAT / LONG: 40.048853, -84.224806

MATERIAL DESCRIPTION AND NOTES	ELEV.	DEPTHS	SPT/ RQD	N_{60}	REC (%)	SAMPLE ID	HP (tsf)	GRADATION (%) GR	CS	FS	SI	CL	ATTERBERG LL	PL	PI	WC	ODOT CLASS (GI)	SO4 ppm	BACK FILL
CONCRETE (3")	868.7																		
LOOSE, GRAY, **STONE FRAGMENTS**, LITTLE SAND, TRACE SILT, TRACE CLAY, MOIST (FILL).	868.4		4 3 2	6	56	SS-1	-	75	12	7	4	2	NP	NP	NP	8	A-1-a (0)	-	
SOFT TO MEDIUM STIFF, DARK BROWN AND GRAY, **SILTY CLAY**, SOME SAND, TRACE GRAVEL, MOIST (FILL).	865.9		2 2 3	6	67	SS-2	0.50	-	-	-	-	-	-	-	-	16	A-6b (V)	-	
MEDIUM STIFF, BROWN, **SILTY CLAY**, LITTLE GRAVEL/STONE FRAGMENTS, SOME SAND, MOIST (FILL)	861.7		1 2 2	5	78	SS-3	0.50	1	4	20	42	33	40	23	17	29	A-6b (11)	-	
VERY DENSE, BROWN, **GRAVEL AND SANDSTONE/STONE FRAGMENTS WITH SAND**, WET (COMPLETELY WEATHERED BEDROCK).	859.2	W 858.7	2 2 2	5	78	SS-4	1.00	-	-	-	-	-	-	-	-	24	A-6b (V)	-	
	854.2		24 50/4"	-	94	SS-5	-	-	-	-	-	-	-	-	-	15	A-1-b (V)	-	
			50/2"	-	83	SS-6	-	-	-	-	-	-	-	-	-	5	A-1-b (V)	-	
DOLOMITE, GRAY, SLIGHTLY TO UNWEATHERED, MODERATELY TO VERY STRONG (BEDROCK).	853.6	TR EOB	50/1"	-	83	SS-7	-	-	-	-	-	-	-	-	-	7	Rock (V)	-	

NOTES: GROUNDWATER SEEPAGE AT 10.0 FEET.
ABANDONMENT METHODS, MATERIALS, QUANTITIES: BACKFILLED WITH BENTONITE GROUT AND CONCRETE

STANDARD ODOT LOG W/ SULFATES (8.5 X 11) - O:\PROJECTS\J033\J033897.01-WEST MAIN STREET (SR41) CORRIDOR IMPROVE\DATA\LOGS\J033897.01 - ODO

PROJECT: MIA-41-10.32 | DRILLING FIRM / OPERATOR: GEOTECH / JG | DRILL RIG: CME-550X | STATION / OFFSET: 460+94, 21' LT. | EXPLORATION ID B-007-0-19
TYPE: ROADWAY / CULVERT | SAMPLING FIRM / LOGGER: GEOTECH / LF | HAMMER: AUTOMATIC HAMMER | ALIGNMENT: W. MAIN ST.
PID: 110253 SFN: | DRILLING METHOD: CFA | CALIBRATION DATE: 3/31/18 | ELEVATION: 868.0 (NAVD) EOB: 15.1 ft. | PAGE 1 OF 1
START: 3/1/19 END: 3/1/19 | SAMPLING METHOD: SPT | ENERGY RATIO (%): 77 | LAT / LONG: 40.048941, -84.224633

MATERIAL DESCRIPTION AND NOTES	ELEV.	DEPTHS	SPT/ RQD	N_{60}	REC (%)	SAMPLE ID	HP (tsf)	GRADATION (%) GR	CS	FS	SI	CL	ATTERBERG LL	PL	PI	WC	ODOT CLASS (GI)	SO4 ppm	BACK FILL
ASPHALT (4")	868.0																		
GRANULAR BASE (8")	867.7																		
MEDIUM DENSE TO DENSE, GRAY AND BROWN, **STONE FRAGMENTS** SOME SAND, TRACE SILT, TRACE CLAY, MOIST TO WET (FILL).	867.0		12 10 9	24	61	SS-1	-	60	17	12	8	3	13	12	1	5	A-1-a (0)	220	
			11 11 12	30	72	SS-2	-	58	20	11	7	4	NP	NP	NP	6	A-1-a (0)	-	
			7 9 11	26	72	SS-3	-	-	-	-	-	-	-	-	-	6	A-1-a (V)	-	
		W 859.0	11 7 3	13	67	SS-4	-	-	-	-	-	-	-	-	-	9	A-1-a (V)	-	
VERY DENSE, GRAY **STONE FRAGMENTS** (SEVERELY WEATHERED BEDROCK).	858.5		50/4"	-	83	SS-5	-	-	-	-	-	-	-	-	-	8	A-1-a (V)	-	
DOLOMITE, GRAY, SLIGHTLY TO UNWEATHERED, MODERATELY TO VERY STRONG (BEDROCK).	856.0	TR	50/1"	-	0	SS-6	-	-	-	-	-	-	-	-	-	-	Rock (V)	-	
	852.9	EOB	50/1"	-	83	SS-7	-	-	-	-	-	-	-	-	-	9	Rock (V)	-	

NOTES: GROUNDWATER SEEPAGE AT 9.0 FEET.
ABANDONMENT METHODS, MATERIALS, QUANTITIES: BACKFILLED WITH BENTONITE GROUT AND ASPHALT PATCH

STANDARD ODOT LOG W/ SULFATES (8.5 X 11) - O:\PROJECTS\J033\J033897.01-WEST MAIN STREET (SR41) CORRIDOR IMPROVE\DATA\LOGS\J033897.01 - ODO

MIA-41-10.32

SOIL PROFILE - CULVERT
CULVERT MIA-41-1085 OVER MORGAN DITCH
BORING LOG B-006-0-19 & B-007-0-19

DRAWN GL | CHECKED SPR

\\10.1.12.10\cin\Data\Projects\J033\J033897.01-West Main Street (SR41) Corridor Improve\Sheets\J033897.01 - Phase 2\dgn\108662_ZL002_Phase 2.dgn Sheet 2/25/2021 11:22:46 AM rbach

LOG OF BORING

Date Started 03/28/2000 | Sampler's Type SS | Dia. 2" O.D. | Water Elev. 861.63'

Date Completed 03/28/2000 | B-001-0-00

Boring No. TB-1 | Station & Offset: 573+03.17, 19.47' RT. | Surface Elevation 868.21'

Elev. (Ft.)	Depth (Ft.)	Std. Pen/ RQD	Rec. (Ft.)	loss (Ft.)	Description	Sample No.	Physical Characteristics								
							% Agg.	% C.S.	% F.S.	% Silt	% Clay	L.L.	P.I.	W.C.	ODOT Class
868.21	0														
867.21	1.0				8" ASPHALT CONCRETE 16" BASE MATERIAL										
866.21	2.0	14/9/10			RUSTY BROWN, GRAVELLY SAND (SC), SOME SILT, LITTLE CLAY, STIFF	1	25	31.5		24.3	19.2	29	13	5	A-6a
865.21	3.0	5/4/8			BROWN SILT AND CLAY, STIFF	2	-	-	-	-	-	-	-	-	VISUAL
864.21	4.0														
863.21	5.0	3/3/5			BROWN SILT AND CLAY, MEDIUM STIFF	3	-	-	-	-	-	-	-	-	VISUAL
862.21	6.0	3/5/4			BROWN SILT AND CLAY, STIFF	4	-	-	-	-	-	-	-	-	VISUAL
861.21	7.0														
860.21	8.0	2/3/5			BROWN SILT AND CLAY, MEDIUM STIFF	5	-	-	-	-	-	-	-	-	VISUAL
859.21	9.0	8/6/15			BROWN SILTY SAND (SC-SM), LITTLE CLAY, LITTLE GRAVEL, VERY STIFF.	6	13.4	39.0		31.2	16.5	17	4	7	A-4a
858.21	10.0														
857.21	11.0	50 (0.4')			BROWN TO GRAY WEATHERED LIMESTONE										
856.21	12.0														
855.21	13.0	57	5.0	0.0	BROWN TO GRAY LIMESTONE, HORIZONTAL FRACTURES, HARD. COMPRESSIVE STRENGTH 6,420 PSI										
854.21	14.0														
853.21	15.0														
852.21	16.0				BOTTOM OF BORING										
851.21	17.0														

LOG OF BORING

Date Started 03/28/2000 | Sampler's Type SS | Dia. 2" O.D. | Water Elev. 862.23'

Date Completed 03/28/2000 | B-002-0-00

Boring No. TB-2 | Station & Offset: 573+12.45 19.52' LT. | Surface Elevation. 868.23'

Elev. (Ft.)	Depth (Ft.)	Std. Pen/ RQD	Rec. (Ft.)	loss (Ft.)	Description	Sample No.	Physical Characteristics								
							% Agg.	% C.S.	% F.S.	% Silt	% Clay	L.L.	P.I.	W.C.	ODOT Class
868.23	0														
867.23	1.0				12"ASPHALT CONCRETE 12" BASE MATERIAL										
866.23	2.0	15/9/6			BROWN GRAVEL AND SAND, TRACE SILT, TRACE CLAY, MEDIUM DENSE.	1	46.3	39.3		9.9	4.6	NP	NP	6	A-1-a
865.23	3.0	2/3/3			BROWN SANDY SILT, SOME GRAVEL, SOME CLAY, MEDIUM STIFF.	2	21.1	25.2		33.4	20.4	33	16	20	A-6b
864.23	4.0														
863.23	5.0	2/3/2			BROWN SILTY CLAY, MEDIUM STIFF	3	-	-	-	-	-	-	-	-	VISUAL
862.23	6.0	2/8/4			BROWN SILTY CLAY, STIFF	4	-	-	-	-	-	-	-	-	VISUAL
861.23	7.0														
860.23	8.0	5/13/15			BROWN SILTY CLAY, VERY STIFF	5	-	-	-	-	-	-	-	-	VISUAL
859.23	9.0	7/50 (0.5')			BROWN SILTY CLAY, LIMESTONE FRAGMENTS	6	-	-	-	-	-	-	-	-	VISUAL
858.23	10.0														
857.23	11.0														
856.23	12.0	32	5.0	0.0	BROWN TO GRAY LIMESTONE, HORIZONTAL FRACTURES, HARD. COMPRESSIVE STRENGTH 5,590 PSI										
855.23	13.0														
854.23	14.0				BOTTOM OF BORING										
853.23	15.0														

MIA-41-10.32

SOIL PROFILE - CULVERT
CULVERT MIA-41-1085 OVER MORGAN DITCH
BORING LOG TB-001-0-00 & TB-002-0-00

DRAWN GL
CHECKED SPR