STATE OF OHIO
DEPARTMENT OF TRANSPORTATION

MIA-41-09.49

CITY OF TROY
MIAMI COUNTY, OHIO

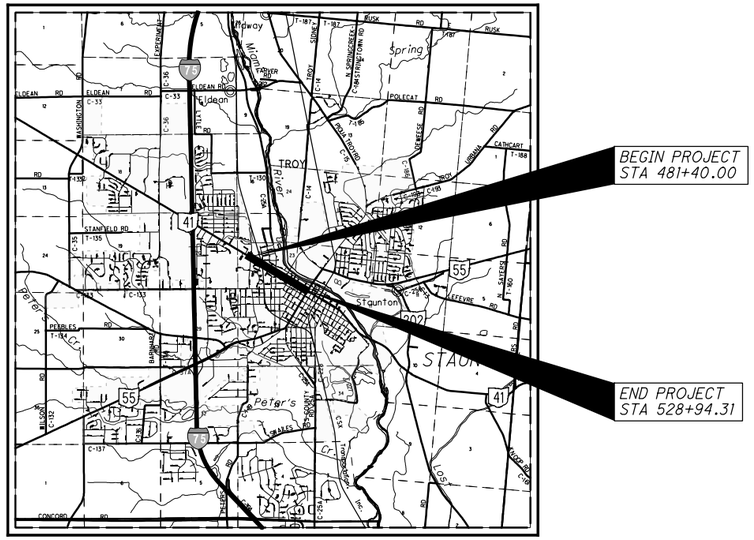

LOCATION MAP

LATITUDE: 40°02'45" LONGITUDE: 84°13'03"

SCALE IN MILES

0 1 2 3 4

N

PORTION TO BE IMPROVED
INTERSTATE HIGHWAY
FEDERAL ROUTES
STATE ROUTES
COUNTY & TOWNSHIP ROADS
OTHER ROADS

DESIGN DESIGNATION

CURRENT ADT (2024)	21950
DESIGN YEAR ADT (2044)	24430
DESIGN HOURLY VOLUME (2044)	1971
DIRECTIONAL DISTRIBUTION	53/47
TRUCKS (24 HOUR B&C)	2%
DESIGN SPEED	30 MPH
LEGAL SPEED	25 MPH

DESIGN FUNCTIONAL CLASSIFICATION:
URBAN MINOR ARTERIAL

NHS PROJECT ..... NO

DESIGN EXCEPTIONS

NONE REQUIRED

ADA DESIGN WAIVER: NONE REQUIRED

UNDERGROUND UTILITIES

Contact Two Working Days Before You Dig

OHIO811.org
Before You Dig

OHIO811, 8-1-1, or 1-800-362-2764
(Non-members must be called directly)

PLAN PREPARED BY:
STRAND ASSOCIATES, INC.
615 ELSINORE PLACE, SUITE 320
CINCINNATI, OHIO 45202

ENGINEERS SEAL:
ALL SHEETS EXCEPT SIGNALS, LIGHTING, MOT

STATE OF OHIO
JEFFERY C. HEIMANN
75251
REGISTERED
PROFESSIONAL ENGINEER

SIGNED: Jeff Heimann
DATE: 12/1/21

ENGINEERS SEAL:
SIGNALS, LIGHTING, MOT

STATE OF OHIO
Shelby R. Ingle
#E-68116
REGISTERED
PROFESSIONAL ENGINEER

SIGNED: Shelby R. Ingle
DATE: 12/01/21

INDEX OF SHEETS:

TITLE SHEET	1
SCHEMATIC PLAN	2
PAVEMENT SUBSUMMARY	3
TYPICAL SECTIONS	4-7
GENERAL NOTES	8-10A
MAINTENANCE OF TRAFFIC	11-34A
GENERAL SUMMARY	35-39A
PROJECT SITE PLAN	40
PAVEMENT DETAILS	41-42
ROADWAY SUBSUMMARY	43-46
PLAN AND PROFILES	47-56
CROSS SECTIONS	57-103
INTERSECTION DETAILS	104-115
DRIVE DETAILS	116-118
DRAINAGE SUBSUMMARY	119-120
STORM SEWER PROFILES	121-127
SANITARY SEWER PLANS	128-132
WATER WORK NOTES	133-134A
OTHER UTILITIES	135
TRAFFIC CONTROL SUBSUMMARY	136-141
TRAFFIC CONTROL PLANS	142-152
TRAFFIC SIGNAL PLANS	153-180A
LIGHTING PLANS	181-188
LANDSCAPING NOTES	189
RIGHT-OF-WAY PLAN	190-222
SOIL PROFILES	

ODOT STANDARD CONSTRUCTION DRAWINGS								CITY OF TROY STANDARD CONSTRUCTION DRAWINGS				SUPPLEMENTAL SPECIFICATIONS		SPECIAL PROVISIONS
BP-2.1	7/17/15	MH-3	7/16/21	HL-10.13	4/17/20	TC-52.20	1/15/21	300-2	10/18	900-1	11/17	SS 800	1/21/22	
BP-2.2	1/15/21			HL-20.11	1/15/21	TC-65.10	1/17/14	300-8	11/17	900-2	11/17	SS 821	4/20/12	
BP-3.1	1/17/20	MT-95.31	7/19/19	HL-30.11	1/15/21	TC-65.11	7/21/17	300-10	11/17	900-3	11/17	SS 824	1/18/19	
BP-4.1	7/19/13	MT-95.32	4/19/19	HL-30.22	1/15/21	TC-81.22	7/16/21	300-11	11/17	900-4	11/17	SS 832	10/19/18	
BP-5.1	7/16/21	MT-95.60	4/19/19	HL-60.11	7/21/17	TC-83.10	7/17/20	300-12	11/17	900-6	11/17	SS 895	4/18/14	
BP-7.1	7/17/20	MT-95.61	4/19/19	HL-60.12	7/16/21	TC-83.20	7/21/17	300-13	10/18	900-7	11/17	SS 916	10/16/20	
		MT-97.12	1/20/17	HL-60.31	1/17/20	TC-85.10	4/17/20	300-14	11/18	900-8	11/17	SS 921	4/20/12	
		MT-99.20	4/19/19			TC-85.20	7/20/18	300-15	11/18	900-9	11/17	SS 995	7/17/15	
		MT-101.60	1/17/20	TC-21.21	7/16/21			800-1	11/17					
CB-3	7/16/21	MT-101.90	7/17/20	TC-41.10	7/19/13	RM-2.1	7/19/13	800-2	11/17					
CB-6	7/16/21	MT-102.20	4/19/19	TC-41.20	10/18/13	RM-3.1	7/20/18	800-3	11/17					
		MT-110.10	7/19/13	TC-41.25	7/17/15			800-4	11/17					
DM-1.2	7/16/21	MT-120.00	1/19/18	TC-41.40	10/18/13			800-6	11/17					
DM-2.1	1/18/13			TC-41.41	7/19/19			800-7	11/17					
		HL-10.11	1/15/21	TC-42.10	10/18/13			800-8	11/17					
LA-1.2	1/16/09	HL-10.12	1/20/17	TC-42.20	10/18/13									

PROJECT DESCRIPTION

WIDENING OF SR 41 (W. MAIN ST.) TO INCLUDE AT LEAST ONE 11' THROUGH LANE IN EACH DIRECTION, RECONSTRUCTING THE SIDEWALK AND CURB LAWN ALONG THE CORRIDOR, REPLACING TRAFFIC SIGNALS ON SIDE ROADS AND ON WEST MAIN STREET AND IMPROVING THE STORMWATER SYSTEM ALONG THE CORRIDOR FOR A LENGTH OF 0.89 MILES.

PROJECT EARTH DISTURBED AREA:	4.4 ACRES
ESTIMATED CONTRACTOR EARTH DISTURBED AREA:	1.0 ACRES
NOTICE OF INTENT EARTH DISTURBED AREA:	5.4 ACRES

2019 SPECIFICATIONS

THE STANDARD SPECIFICATIONS OF THE STATE OF OHIO, DEPARTMENT OF TRANSPORTATION, INCLUDING SUPPLEMENTAL SPECIFICATIONS LISTED IN THE PLANS AND CHANGES LISTED IN THE PROPOSAL SHALL GOVERN THIS IMPROVEMENT.

I HEREBY APPROVE THESE PLANS AND DECLARE THAT THE MAKING OF THE IMPROVEMENT WILL NOT REQUIRE THE CLOSING TO TRAFFIC OF THE HIGHWAY AND THAT PROVISIONS FOR THE MAINTENANCE AND SAFETY OF TRAFFIC WILL BE AS SET FORTH ON THE PLANS AND ESTIMATES.

APPROVED _____
DATE _____ CITY ENGINEER

APPROVED _____
DATE _____ MAYOR, CITY OF TROY

FEDERAL PROJECT NO. E190 (578)

PID NO. 108662

CONSTRUCTION PROJECT NO.

RAILROAD INVOLVEMENT
CSX RAILROAD

MIA-41-09.49

S:\CIN\4300--4399\4354\004\Drawings\CAD\108662\roadway\sheets\08662GT001.dgn 12/1/2021 4:51:26 PM CarlR

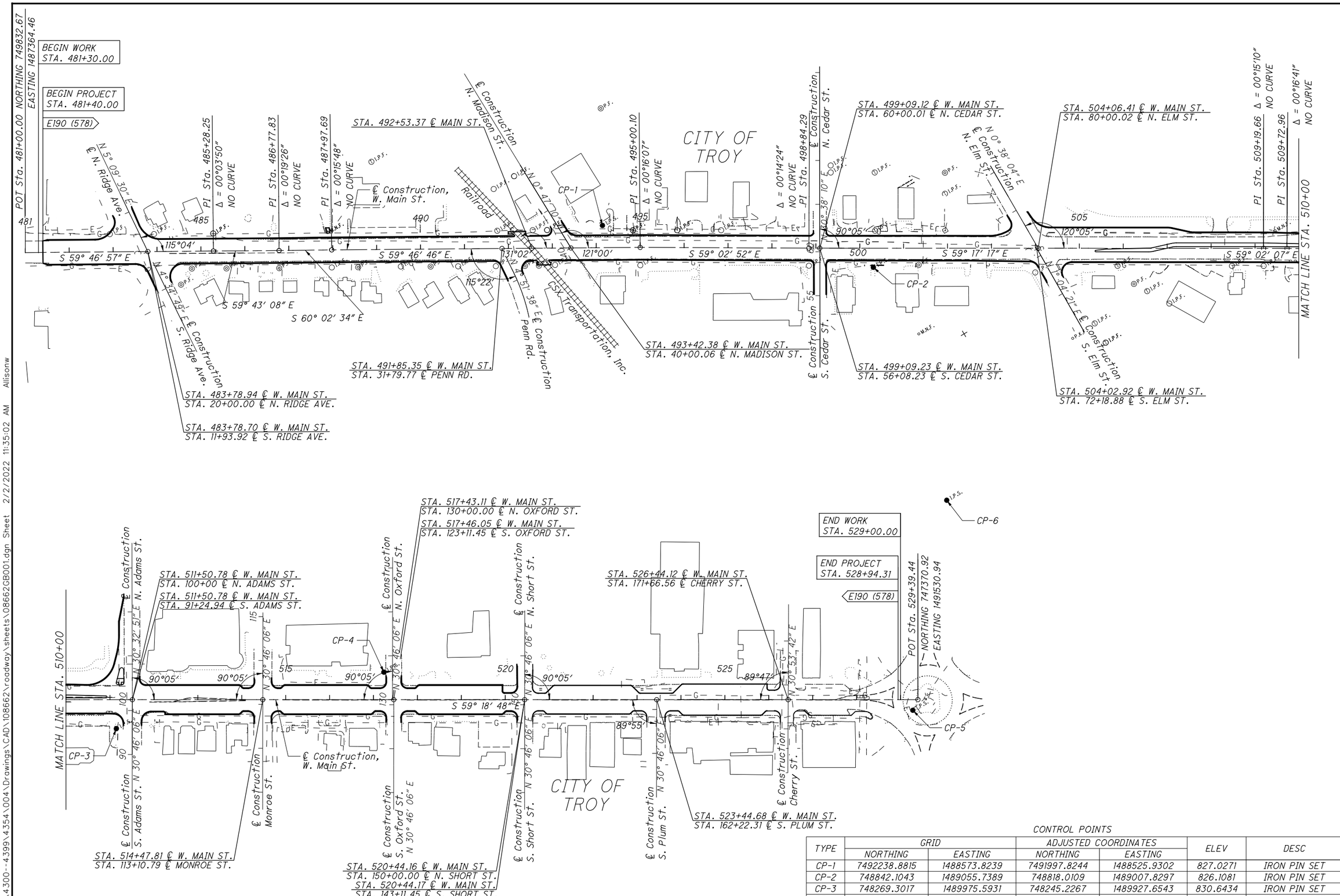

THE COORDINATES SHOWN THROUGHOUT THE PLANS ARE SCALED USING THE PROJECT ADJUSTMENT FACTOR SHOWN ON SHEET 8.

CONTROL POINTS

TYPE	GRID		ADJUSTED COORDINATES		ELEV	DESC
	NORTHING	EASTING	NORTHING	EASTING		
CP-1	7492238.8815	1488573.8239	7491997.8244	1488525.9302	827.0271	IRON PIN SET
CP-2	748842.1043	1489055.7389	748818.0109	1489007.8297	826.1081	IRON PIN SET
CP-3	748269.3017	1489975.5931	748245.2267	1489927.6543	830.6434	IRON PIN SET
CP-4	748069.0514	1490565.1124	748044.9828	1490517.1546	833.1110	IRON PIN SET
CP-5	747379.5067	1491556.7637	747355.4603	1491508.7740	836.2565	IRON PIN SET

SCHEMATIC PLAN

MIA-41-09.49

S:\CIN\4300-4399\4354\004\Drawings\CAD\108662\roadway\sheets\086662GB001.dgn Sheet 2/2/2022 11:35:02 AM Allisonw

STATION FROM	STATION TO	LIN. FT.	204 SUBGRADE COMPACTION (SY)	252 FULL DEPTH PAVEMENT SAWING (FT)	254 PAVEMENT PLANING, ASPHALT CONCRETE (SY)	301 ASPHALT CONCRETE BASE, PG64-22 (CY)	304 AGGREGATE BASE (CY)	407 TACK COAT (GAL)	422 AGGREGATE, SINGLE CHIP SEAL, TYPE A (SY)	441 ASPHALT CONCRETE SURFACE COURSE, TYPE 1, (448), PG64-22 (CY)	441 ASPHALT CONCRETE INTERMEDIATE COURSE, TYPE 2, (448) (CY)	452 4" NON-REINFORCED CONCRETE PAVEMENT, CLASS QC IP (SY)	452 9" NON-REINFORCED CONCRETE PAVEMENT, CALSS QC IP (SY)	609 COMBINATION CURB AND GUTTER, TYPE 2, AS PER PLAN (FT)	609 COMBINATION CURB AND GUTTER, TYPE 3, AS PER PLAN (FT)	609 CURB, TYPE 6, AS PER PLAN (FT)	609 CURB, MISC.; STREETSCAPE CURB (FT)
481+40	487+00	550	942	1289	4384	133	157	614	859	176	247		20	1194	50		
487+00	492+00	500	792	1076	2724	109	132	398	717	109	152			1062			
492+00	497+00	500	750	1144	3021	103	125	429	763	118	165			953			
497+00	502+00	500	762	1173	2998	95	127	420	782	116	162	3		1124			
502+00	507+00	500	1680	1489	3066	330	280	598	841	151	211		64	931	146	362	
507+00	512+00	500	1734	1903	2992	181	289	481	1269	128	179	34		1024		819	
512+00	517+00	500	624	1081	3456	69	104	456	721	128	180			1046			
517+00	522+00	500	636	1215	3500	81	106	470	810	132	184			796		394	
522+00	527+00	500	450	1058	3392	82	75	459	705	128	179					950	55
527+00	529+39	239	306	367	2012	67	51	283	245	78	109			162			163
GRAND TOTALS CARRIED TO GENERAL SUMMARY			8,676	11,795	31,545	1,250	1,446	4,608	7,712	1,264	1,768	37	84	8,292	196	2,525	218

CALCULATED CJR
CHECKED JCH

PAVEMENT SUBSUMMARY

MIA-41-09.49

S:\CIN\4300--4399\4354\004\Drawings\CAD\108662\roadway\sheets\08662GS001.dgn Sheet 2/2/2022 11:35:02 AM Allisonw

LEGEND

- (A) Existing Asphalt Layer (6"±)
- (B) Existing Asphalt Layer (7"±)
- (C) Existing Concrete Layer (5"±)
- (D) Existing Concrete Layer (12"±)
- (E) Existing Granular Base Layer (7"±)
- (F) Existing Granular Base Layer (11"±)
- (G) Existing Subgrade
- (H) Existing Concrete Sidewalk
- (I) Existing Concrete Curb
- (J) Existing Paver Sidewalk

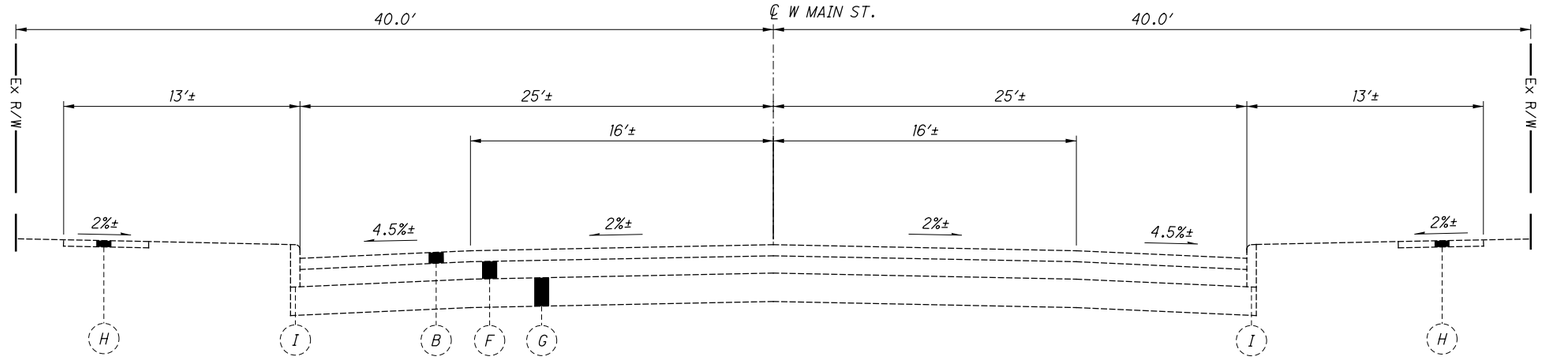

TYPICAL SECTION, WEST MAIN STREET
STA. 481+50 TO STA. 501+50

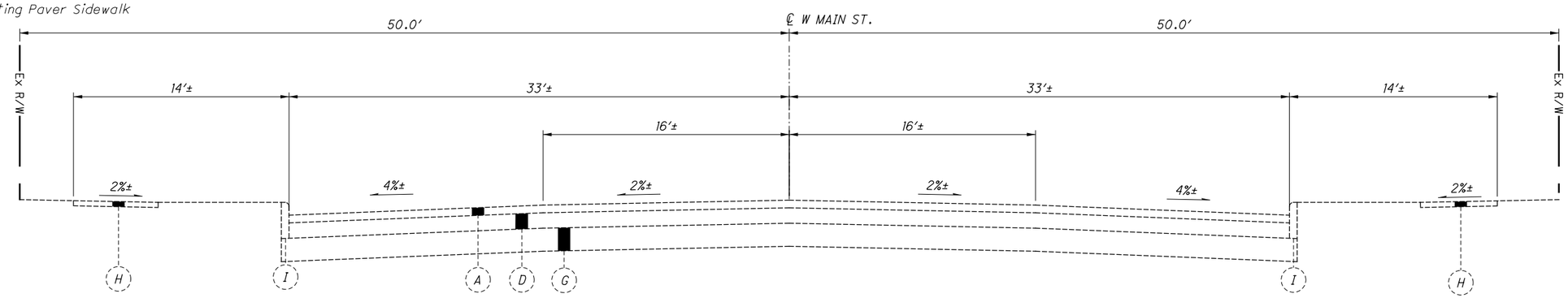

TYPICAL SECTION, WEST MAIN STREET
STA. 501+50 TO STA. 523+00

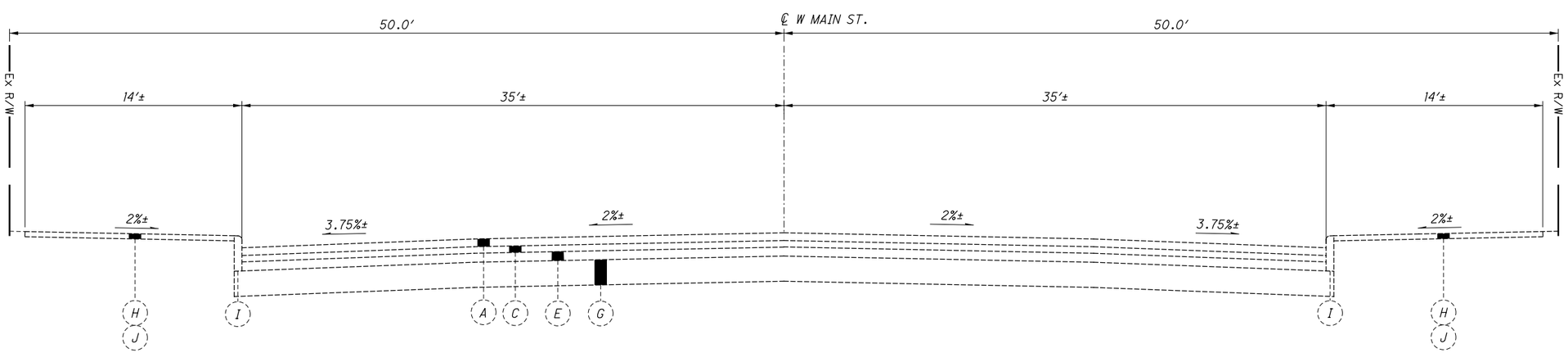

TYPICAL SECTION, WEST MAIN STREET
STA. 523+00 TO STA. 528+95

TYPICAL SECTIONS - WEST MAIN STREET (S.R. 41)

MIA-41-09.49

S:\CIN\4300--4399\4354\004\Drawings\CAD\108662\roadway\sheets\08662GY001.dgn Sheet 2/2/2022 11:35:03 AM Allisonw

* SEE CROSS SECTIONS

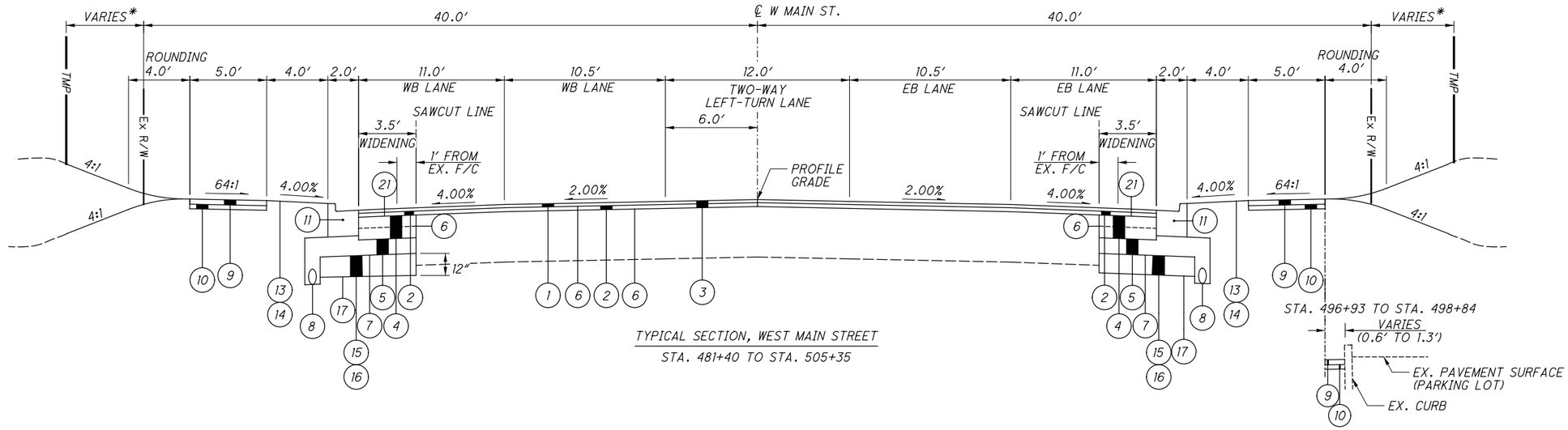

TYPICAL SECTION, WEST MAIN STREET

STA. 481+40 TO STA. 505+35

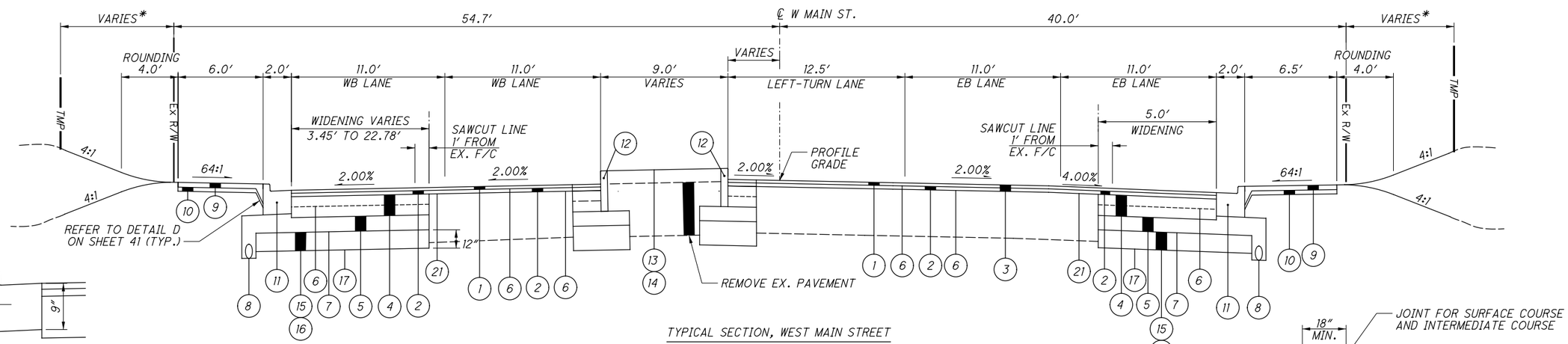

TYPICAL SECTION, WEST MAIN STREET

STA. 505+35 TO STA. 510+91

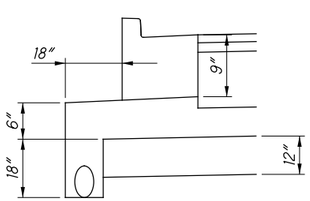

TYPICAL PAVEMENT STEP DETAIL WITH UNDERDRAIN

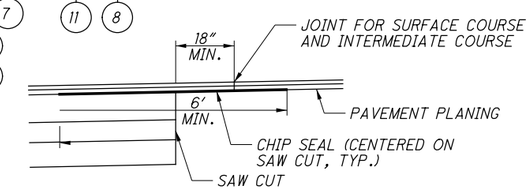

LAP JOINT DETAIL

LEGEND

1. ITEM 441 - 1¼″ ASPHALT CONCRETE SURFACE COURSE, TYPE 1, (448), PG64-22
2. ITEM 441 - 1¾″ ASPHALT CONCRETE INTERMEDIATE COURSE, TYPE 2, (448)
3. ITEM 254 - PAVEMENT PLANING, ASPHALT CONCRETE (VARIABLE THICKNESS, 0.25″ TO 6″)
4. ITEM 301 - 9″ ASPHALT CONCRETE BASE, PG64-22 (3″ MAX. LIFT)
5. ITEM 304 - 6″ AGGREGATE BASE
6. ITEM 407 - TACK COAT
7. ITEM 204 - SUBGRADE COMPACTION
8. ITEM 605 - 6″ BASE PIPE UNDERDRAIN
9. ITEM 608 - 5″ CONCRETE WALK
10. ITEM 304 - 4″ AGGREGATE BASE
11. ITEM 609 - COMBINATION CURB AND GUTTER, TYPE 2, AS PER PLAN
12. ITEM 609 - CURB, TYPE 6, AS PER PLAN
13. ITEM 659 - SEEDING AND MULCHING
14. ITEM 659 - TOPSOIL, 4″
15. ITEM 204 - EXCAVATION OF SUBGRADE
16. ITEM 204 - GRANULAR MATERIAL, TYPE B, 12″
17. ITEM 204 - GEOTEXTILE FABRIC
18. ITEM 609 - CURB, MISC.: STREETSCAPE CURB.
19. ITEM 608 - WALKWAY, MISC.: PAVER SYSTEM
20. ITEM 304 - 8″ AGGREGATE BASE
21. ITEM 422 - AGGREGATE SINGLE CHIP SEAL, TYPE A (SEE LAP JOINT DETAIL ON THIS SHEET)

TYPICAL SECTIONS - WEST MAIN STREET (S.R. 41)

MIA-41-09.49

S:\CIN\4300--4399\4354\004\Drawings\CAD\108662\roadway\sheets\08662GY002.dgn Sheet 2/2/2022 11:35:03 AM Allisonw

* SEE CROSS SECTIONS

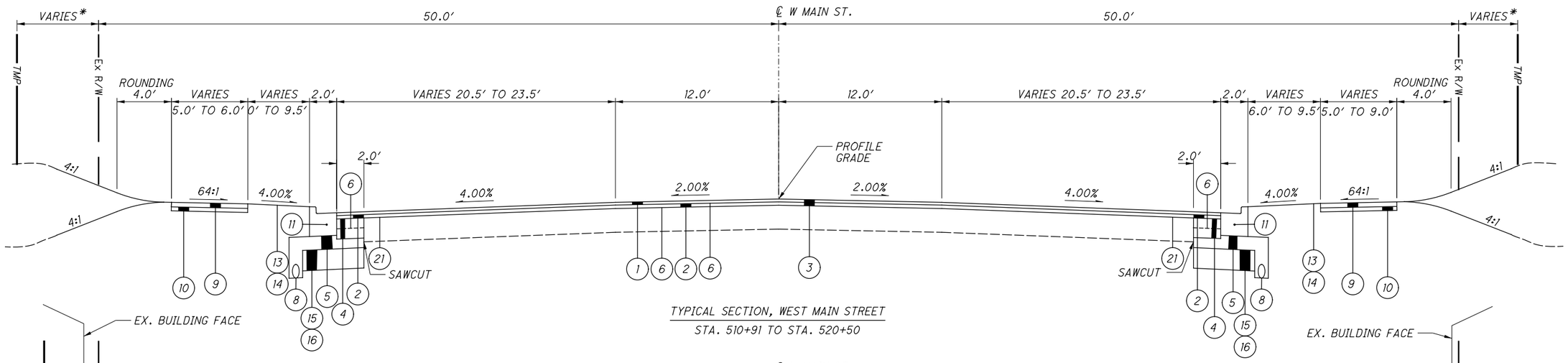

TYPICAL SECTION, WEST MAIN STREET
STA. 510+91 TO STA. 520+50

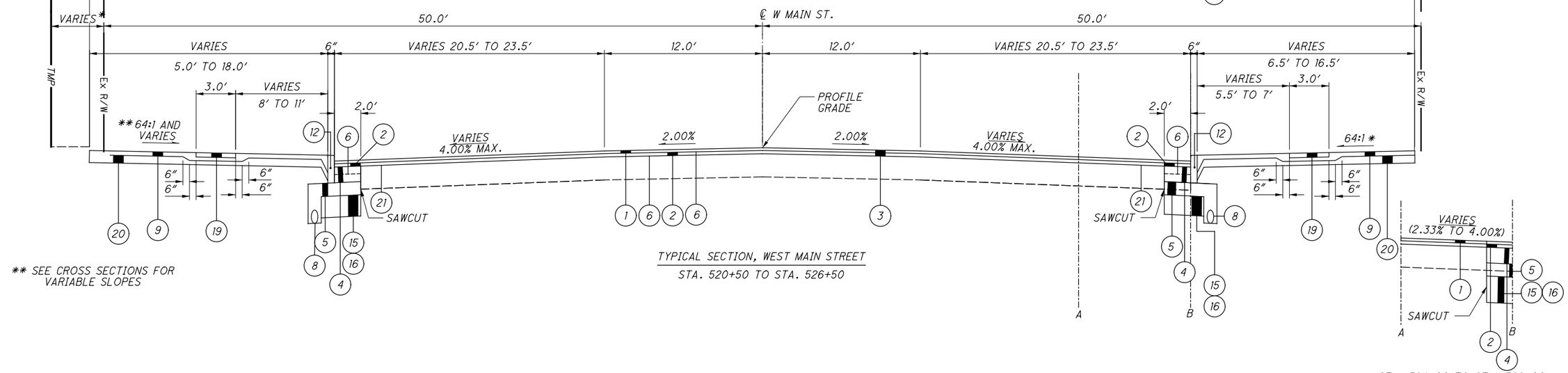

TYPICAL SECTION, WEST MAIN STREET
STA. 520+50 TO STA. 526+50

STA. 524+00 TO STA. 526+00

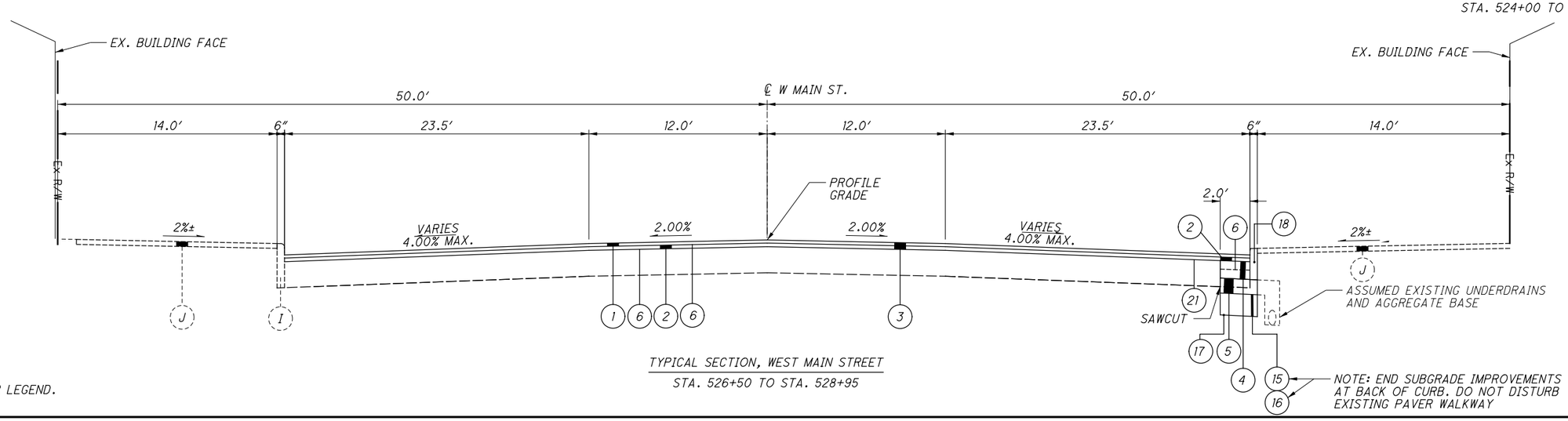

TYPICAL SECTION, WEST MAIN STREET
STA. 526+50 TO STA. 528+95

SEE SHEET 6 FOR LEGEND.

TYPICAL SECTIONS - WEST MAIN STREET (S.R. 41)

MIA-41-09.49

S:\CIN\4300--4399\4354\004\Drawings\CAD\108662\roadway\sheets\08662GY003.dgn Sheet 2/2/2022 11:35:04 AM Allisonw

LEGEND

- (A) Existing Asphalt Layer (6"±)
- (B) Existing Asphalt Layer (7"±)
- (C) Existing Concrete Layer (5"±)
- (D) Existing Concrete Layer (12"±)
- (E) Existing Granular Base Layer (7"±)
- (F) Existing Granular Base Layer (11"±)
- (G) Existing Subgrade
- (H) Existing Concrete Sidewalk
- (I) Existing Concrete Curb
- (J) Existing Paver Sidewalk

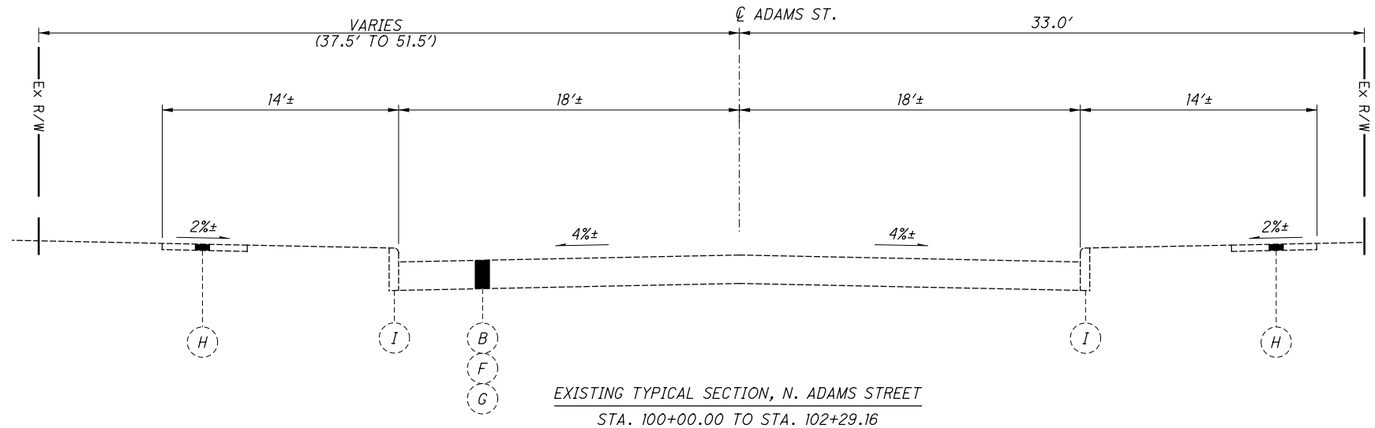

EXISTING TYPICAL SECTION, N. ADAMS STREET

STA. 100+00.00 TO STA. 102+29.16

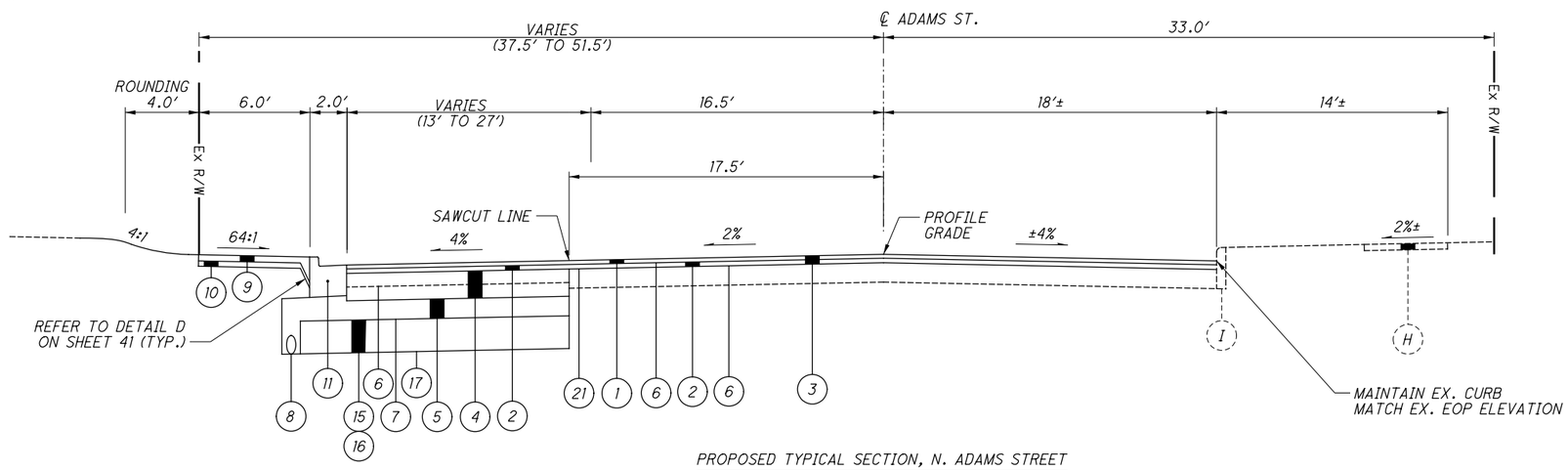

PROPOSED TYPICAL SECTION, N. ADAMS STREET

STA. 100+00.00 TO STA. 102+29.16

LEGEND

1. ITEM 441 - 1¼" ASPHALT CONCRETE SURFACE COURSE, TYPE 1, (448), PG64-22
2. ITEM 441 - 1¾" ASPHALT CONCRETE INTERMEDIATE COURSE, TYPE 2, (448)
3. ITEM 254 - PAVEMENT PLANING, ASPHALT CONCRETE (VARIABLE THICKNESS, 0.25" TO 6")
4. ITEM 301 - 9" ASPHALT CONCRETE BASE, PG64-22 (3" MAX. LIFT)
5. ITEM 304 - 6" AGGREGATE BASE
6. ITEM 407 - TACK COAT
7. ITEM 204 - SUBGRADE COMPACTION
8. ITEM 605 - 6" BASE PIPE UNDERDRAIN
9. ITEM 608 - 5" CONCRETE WALK
10. ITEM 304 - 4" AGGREGATE BASE
11. ITEM 609 - COMBINATION CURB AND GUTTER, TYPE 2, AS PER PLAN
12. ITEM 609 - CURB, TYPE 6, AS PER PLAN
13. ITEM 659 - SEEDING AND MULCHING
14. ITEM 659 - TOPSOIL, 4"
15. ITEM 204 - EXCAVATION OF SUBGRADE
16. ITEM 204 - GRANULAR MATERIAL, TYPE B, 12"
17. ITEM 204 - GEOTEXTILE FABRIC
18. ITEM 609 - CURB, MISC.: STREETSCAPE CURB.
19. ITEM 608 - WALKWAY, MISC.: PAVER SYSTEM
20. ITEM 304 - 8" AGGREGATE BASE
21. SPECIAL - STRESS ABSORBING MEMBRANE INTERLAYER (SAMI) (SEE LAP JOINT DETAIL ON SHEET 5)

SEE SHEET 6 FOR LEGEND.

TYPICAL SECTIONS - N. ADAMS STREET

MIA-41-09.49

S:\CIN\4300--4399\4354\004\Drawings\CAD\108662\roadway\sheets\08662GY004.dgn Sheet 2/2/2022 11:35:04 AM Allisonw

ROUNDING

THE ROUNDING AT SLOPE BREAKPOINTS SHOWN ON THE TYPICAL SECTIONS APPLIES TO ALL CROSS-SECTIONS EVEN THOUGH OTHERWISE SHOWN.

UTILITIES

LISTED BELOW ARE ALL UTILITIES LOCATED WITHIN THE PROJECT CONSTRUCTION LIMITS TOGETHER WITH THEIR RESPECTIVE OWNERS:

TELECOM:
CHARTER COMMUNICATIONS
3691 TURNER ROAD
DAYTON, OH 45415
PHONE: (937) 396-8372

TELECOM:
METRONET
100 HARRISBURG ROAD
ENGLEWOOD, OH 45322
606-682-0833
CRAIG HARDIN

TELEPHONE:
AT&T
7201 FAR HILLS AVENUE
DAYTON, OH 45459
PHONE: (937) 296-3588

FIBER OPTIC:
CENTURY LINK
1025 ELDORADO BLVD
BROOMFIELD, CO 80021
PHONE: (720) 888-1089

GAS:
CENTERPOINT ENERGY,
FORMERLY KNOWN AS
VECTREN ENERGY
1335 E DAYTON YELLOW
SPRING ROAD
FAIRBORN, OH 45324
PHONE: (800) 339-6594

TELECOM:
FRONTIER COMMUNICATIONS
10 MULBERRY ST.
BROOKVILLE, OH 45309
CHARLES P. BERNACCHI
PHONE: (937) 833-0468
PHONE: (541) 390-3910

WATER AND SEWER:
CITY OF TROY
100 S MARKET ST
TROY, OH 45373
PHONE: (937) 335-4151

ELECTRIC:
AES OHIO,
FORMERLY KNOWN AS
THE DAYTON POWER
AND LIGHT COMPANY
1065 WOODMAN DRIVE
DAYTON, OH 45432
PHONE: (937) 331-4521

LIGHTING:
MIAMI VALLEY LIGHTING
1065 WOODMAN DRIVE
DAYTON, OHIO 45432
PHONE: (937) 259-7192
CELL: (937) 475-8627
ROBYN LIVESAY

THE LOCATION OF THE UNDERGROUND UTILITIES SHOWN ON THE PLANS ARE AS OBTAINED FROM THE OWNERS AS REQUIRED BY SECTION 153.64 O.R.C.

WORK LIMITS

THE WORK LIMITS SHOWN ON THESE PLANS ARE FOR PHYSICAL CONSTRUCTION ONLY. PROVIDE THE INSTALLATION AND OPERATION OF ALL WORK ZONE TRAFFIC CONTROL AND WORK ZONE TRAFFIC CONTROL DEVICES REQUIRED BY THESE PLANS WHETHER INSIDE OR OUTSIDE THESE WORK LIMITS.

ITEM 204 - PROOF ROLLING

THE FOLLOWING QUANTITY IS PROVIDED IN THE GENERAL SUMMARY TO ADDRESS LOCATIONS REQUIRING PROOF ROLLING.

ITEM 204 - PROOF ROLLING 20 HOUR.

CLEARING AND GRUBBING

REMOVE ALL SHRUBS SPECIFICALLY MARKED FOR REMOVAL WITHIN THE CONSTRUCTION LIMITS UNDER THE LUMP SUM BID FOR ITEM 201, CLEARING AND GRUBBING. ALL VEGETATION WITHIN CONSTRUCTION LIMITS, INCLUDING SHRUBS AND TREES NOT SPECIFICALLY LABELLED AND PAID FOR SEPARATELY, SHALL BE REMOVED UNDER THIS ITEM. CARE SHALL BE TAKEN TO MINIMIZE DISTURBANCE TO LANDSCAPED AREAS AS NOTED ON THE PLANS.

SURVEYING PARAMETERS

PRIMARY PROJECT CONTROL MONUMENTS GOVERN ALL POSITIONING ON ODOT PROJECTS. SEE SHEET 2 OF THE PLANS FOR A TABLE CONTAINING PROJECT CONTROL INFORMATION.

USE THE FOLLOWING PROJECT CONTROL, VERTICAL POSITIONING, AND HORIZONTAL POSITIONING PARAMETERS FOR ALL SURVEYING:

PROJECT CONTROL

POSITIONING METHOD: MIN. 5 VRS-DERIVED GNSS OBSERVATIONS
MONUMENT TYPE: IRON PIN

VERTICAL POSITIONING

ORTHOMETRIC HEIGHT DATUM: NAVD88
GEOID: GEOID12A

HORIZONTAL POSITIONING

REFERENCE FRAME: NAD83 (2011)
ELLIPSOID: GRS80
MAP PROJECTION: LAMBERT CONFORMAL CONIC
COORDINATE SYSTEM: OHIO STATE PLANE - SOUTH ZONE
PROJECT ADJUSTMENT FACTOR: 1.00003211 (GROUND TO GRID MULTIPLIER)
ORIGIN OF COORDINATE SYSTEM: 0,0

USE THE POSITIONING METHODS AND MONUMENT TYPE USED IN THE ORIGINAL SURVEY TO RESTORE ALL MONUMENTS RELATED TO PRIMARY PROJECT CONTROL THAT ARE DAMAGED OR DESTROYED BY CONSTRUCTION ACTIVITIES. RESTORE THE DAMAGED OR DESTROYED MONUMENTS IN ACCORDANCE WITH CMS 623.

UNITS ARE IN U.S. SURVEY FEET. USE THE FOLLOWING CONVERSION FACTOR: 1 METER = 3.280833333 U.S. SURVEY FEET.

AIRWAY/HIGHWAY CLEARANCE FOR AIRPORTS AND HELIPORTS

THIS PROJECT HAS BEEN IDENTIFIED AS BEING WITHIN THE INFLUENCE AREA OF A PRIVATE USE AIRPORT OR HELIPORT. NO TEMPORARY STRUCTURES OR CONSTRUCTION EQUIPMENT AT MAXIMUM OPERATING HEIGHT SHALL EXCEED A HEIGHT OF 50 FT.. IF ANY TEMPORARY STRUCTURES OR CONSTRUCTION EQUIPMENT WILL EXCEED THIS HEIGHT. COORDINATION WITH THE AIRPORT OWNER AND THE ODOT OFFICE OF AVAITION WILL BE NECESSARY PRIOR TO ERECTING SUCH TEMPORARY STRUCTURES OR OPERATING SUCH EQUIPMENT ON THE PROJECT. FOR PRIVATE USE AIRPORTS OR HELIPORTS, COORDINATE WITH THE AIRPORT OWNER AND THE ODOT OFFICE OF AVIATION. NO TEMPORARY STRUCTURES OR CONSTRUCTION EQUIPMENT SHALL EXCEED THE PERMISSIBLE HEIGHT, UNTIL COORDINATION IS MET AND DOCUMENTATION HAS BEEN FURNISHED TO THE PROJECT ENGINEER. IF COORDINATION IS NOT OBTAINED, THEN THE PROJECT ENGINEER WILL HAVE THE AUTHORITY TO PROVIDE RESTRICTIONS AS REQUIRED.

KETTERING HEALTH HELIPAD
KETTERING HEALTH TROY
600 W. MAIN ST.
TROY, OH 45373
(937) 980-7000

ITEM 204 - SUBGRADE COMPACTION AND PROOF ROLLING

CONSTRUCT THE SUBGRADE AS FOLLOWS AND IN THE FOLLOWING SEQUENCE:

1. SHAPE THE SUBGRADE TO WITHIN 0.2 FEET OF THE PLAN SUBGRADE ELEVATION.

2. EXCAVATE AND REPLACE UNSUITABLE SUBGRADE BEFORE PROOF ROLLING. THE EXCAVATION LIMITS ARE SHOWN AND LABELED ON THE CROSS SECTIONS AS UNSUITABLE SUBGRADE. UNSUITABLE SUBGRADE INCLUDES UNSUITABLE SOIL (A-4B, A-2-5, A-5, A-7-5, AND SOIL WITH A LIQUID LIMIT GREATER THAN 65) AND ANY COAL, SHALE, OR ROCK WHICH NEEDS TO BE REMOVED ACCORDING TO 204.05.

   IF THERE IS UNSUITABLE SUBGRADE IN A SHALLOW FILL LOCATION, EXCAVATE AND REPLACE THE UNSUITABLE SUBGRADE BEFORE CONSTRUCTING THE SHALLOW FILL AND SHAPING THE SUBGRADE.

3. COMPACT THE SUBGRADE ACCORDING TO 204.03.

4. APPROXIMATE LIMITS FOR EXCAVATION OF UNSTABLE SUBGRADE ARE SHOWN AND LABELED ON THE CROSS SECTIONS AS UNSTABLE SUBGRADE. THE ENGINEER WILL IDENTIFY THE ACTUAL LIMITS OF EXCAVATION FOR UNSTABLE SUBGRADE BASED ON THE PROOF ROLLING RESULTS AND VISUAL OBSERVATIONS.

   PROOF ROLL THE COMPACTED SUBGRADE ACCORDING TO 204.06.

5. EXCAVATE UNSTABLE SUBGRADE AS DIRECTED BY THE ENGINEER AND STABILIZE BY REPLACING WITH THE SPECIFIED MATERIALS ACCORDING TO 204.07. EXCAVATIONS WILL EXTEND 18 INCHES BEYOND THE EDGE OF THE SURFACE OF THE PAVEMENT, PAVED SHOULDERS, OR PAVED MEDIANS.

6. PROOF ROLL THE STABILIZED AREAS ACCORDING TO 204.06 TO VERIFY STABILITY.

7. FINE GRADE THE SUBGRADE TO THE SPECIFIED GRADE.

THE QUANTITIES FOR EXCAVATING THE UNSUITABLE SUBGRADE AND UNSTABLE SUBGRADE ARE BOTH PAID UNDER ITEM 204 EXCAVATION OF SUBGRADE.

SUBGRADE IMPROVEMENT

PER THE GEOTECHNICAL ENGINEER'S REPORT, SUBGRADE REMEDIATION IS REQUIRED ALONG THE LENGTH OF THIS PROJECT. EXCAVATE AND REPLACE SUBGRADE WITH THE ITEMS BELOW AT A DEPTH OF 12" AND EXTEND 18" BEHIND THE BACK OF CURB, IN THE LOCATIONS SPECIFIED IN THE PLANS. THE FOLLOWING QUANTITIES HAVE BEEN CARRIED TO THE GENERAL SUMMARY:

ITEM 204 - EXCAVATION OF SUBGRADE	2,824 CY
ITEM 204 - GRANULAR MATERIAL, TYPE B	2,824 CY
ITEM 204 - GEOTEXTILE FABRIC	8,472 SY

FROM STA. 523+50 TO STA. 526+26, EX. GAS MAY BE WITHIN THE PROPOSED DEPTH OF THIS WORK. IN AREAS WHERE THIS OCCURS, THE CONTRACTOR IS NOT TO PERFORM THIS WORK. SEE CROSS SECTION SHEETS FOR ADDITIONAL DETAIL.

PAVING AT RAILROAD CROSSING

WORK THE CROWN OUT OF THE PROPOSED PAVEMENT ON EACH SIDE OF THE RAILROAD CROSSING, BEGINNING 50 FEET FROM THE NEAREST RAIL, BY RAISING THE EDGES OF THE NEW PAVEMENT TO MEET THE PLATFORM ELEVATION.

COORDINATION WITH CSXT

THE CITY'S CONTRACTOR SHALL PERFORM ROADWAY WORK TO AND THROUGH THE RAILROAD PROPERTY WITH CSXT TRACK PROTECTION BY FLAGGING. THIS WORK INCLUDES:

MILLING, PAVEMENT WIDENING, PAVING, CURB, GUTTER, AND SIDEWALK

STORM SEWER CONSTRUCTION THROUGH THE RAILROAD RIGHT-OF-WAY

AN "OBSTRUCTION FREE ZONE" (OFZ) MUST BE MAINTAINED ADJACENT AND PARALLEL TO THE TRACK. ALL ROADWAY ELEMENTS (E.G. CURBS, MEDIANS, DRAINAGE STRUCTURES) MUST BE FLUSH WITH THE PAVEMENT WITHIN TWELVE (12) FEET OF THE CENTERLINE OF TRACK. NO PORTLAND CEMENT CONCRETE PAVEMENT ALLOWED WITHIN OFZ.

RAILROAD FLAGGING WILL BE REQUIRED FOR CURB/GUTTER CONSTRUCTION, STORM DRAINAGE CONSTRUCTION, FULL-DEPTH AND ASPHALT MILLING AND PAVING WITHIN FIFTY (50) FEET OF THE RAILROAD TRACK

SEEDING AND MULCHING

THE FOLLOWING QUANTITIES ARE PROVIDED TO PROMOTE GROWTH AND CARE OF PERMANENT SEEDED AREAS:

659, SOIL ANALYSIS TEST - 2 EACH

659, TOPSOIL - 652 CU. YD.

659, SEEDING AND MULCHING - 5,869 SQ. YD.

659, REPAIR SEEDING AND MULCHING - 294 SQ. YD

659, INTER-SEEDING - 294 SQ. YD.

659, COMMERCIAL FERTILIZER - 0.80 TON

659, LIME - 1.21 ACRES

659, WATER - 16 M. GAL.

659, MOWING - 14 M. SQ. FT.

SEEDING AND MULCHING SHALL BE APPLIED TO ALL AREAS OF EXPOSED SOIL BETWEEN THE RIGHT-OF-WAY LINES, AND WITHIN THE CONSTRUCTION LIMITS FOR AREAS OUTSIDE THE RIGHT-OF-WAY LINES COVERED BY WORK AGREEMENT OR SLOPE EASEMENT. QUANTITY CALCULATIONS FOR SEEDING AND MULCHING ARE BASED ON THESE LIMITS.

PART-WIDTH CONSTRUCTION

BECAUSE OF THE NECESSITY TO BUILD THIS PROJECT UNDER TRAFFIC AND TO CONSTRUCT THE FULL PAVEMENT WIDTH IN STAGES, EXERCISE CARE TO PREVENT THE CONSTRUCTION OF A BUTT JOINT IN THE BASE COURSES. LAP LONGITUDINAL JOINTS AS SHOWN ON STANDARD CONSTRUCTION DRAWING BP-3.1.

SUBSURFACE FILLING

EXISTING SUBSPACES UNDER SIDEWALKS SHALL BE FILLED BY CLOSING OFF OPENINGS IN THE EXISTING BUILDNG WALL AT ITS FACE, IF REQUIRED, AND FILLING THE VOID WITH ITEM 613 LOW STRENGTH MORTAR BACKFILL, TYPE 1, PER THE DETAIL ON SHEET 41.

PHOTOS OF THE SUBSURFACE VOIDS BENEATH SIDEWALKS CAN BE OBTAINED FROM THE CITY UPON REQUEST. THE FOLLOWING PROPERTIES ON WEST MAIN STREET REQUIRE FILLING OF EXISTING SUBSPACES:
100, 106, 108, 110, 112, AND 322.

WORK WILL BE PAID FOR IN THE UNIT PRICES DESCRIBED BELOW AT THE LOCATIONS DIRECTED BY THE ENGINEER AFTER THE EXISTING WALK AND BASE HAVE BEEN REMOVED.

THE TWO PAY ITEMS BELOW SHALL INCLUDE ALL INCIDENTAL WORK AND MATERIALS REQUIRED FOR COMPLETING THE INSTALLATION AS SHOWN ON SHEET 41.

THE FOLLOWING QUANTITIES HAVE BEEN INCLUDED IN THE GENERAL SUMMARY FOR USE AS DIRECTED BY THE ENGINEER:

ITEM 602 - MASONRY, MISC.: BLOCK WALL, 8" MIN.	100 SF
ITEM 613 - LOW STRENGTH MORTAR BACKFILL	71 CY

SUBSURFACE FILLING OF 107 W. MAIN STREET

THE EXISTING SUBSPACE UNDER THE SIDEWALK AT 107 W. MAIN STREET SHALL BE FILLED BY CONSTRUCTING A BASEMENT WALL AND FILLING THE VOID BENEATH THE SIDEWALK. THE CONTRACTOR IS RESPONSIBLE FOR PROVIDING THE CITY WITH DESIGN DRAWINGS FOR THE WORK THAT ARE DESIGNED AND STAMPED BY A PROFESSIONAL ENGINEER LICENSED IN THE STATE OF OHIO. THE CONTRACTOR SHALL NOT BEGIN WORK UNTIL THE DESIGN DRAWINGS ARE APPROVED BY THE CITY.

PHOTOS OF THE SUBSURFACE VOIDS BENEATH SIDEWALKS CAN BE OBTAINED FROM THE CITY UPON REQUEST.

DESIGN, PERMITTING, LABOR, MATERIALS, AND EQUIPMENT NECESSARY TO COMPLETE THE WORK WILL BE PAID FOR WITH LUMP SUM ITEM 690 - SPECIAL - SUBSURFACE FILLING OF 107 W. MAIN STREET.

ITEM 202 - REMOVAL MISC.: REMOVE AND RESET STREETSCAPE ITEMS

THIS WORK SHALL CONSIST OF REMOVAL, STORAGE, AND RESET OF EXISTING CITY-OWNED STREETSCAPE ITEMS. THESE ITEMS INCLUDE ORNAMENTAL TRASH CANS, BENCHES, COMMEMORATIVE PLAQUES, BICYCLE RACKS, AND GARDEN POTS. THE CONTRACTOR SHALL REMOVE THESE ITEMS IN ACCORDANCE WITH SECTION 202 OF THE ODOT CMS AND COORDINATE WITH THE CITY ON STORAGE AND/OR DISPOSAL OF THESE ITEMS. THE CONTRACTOR IS TO CONFIRM LOCATIONS WITH THE CITY BEFORE RESETTING THE ITEMS.

THIS WORK SHALL BE PAID FOR AS LUMP SUM. THE FOLLOWING ESTIMATED QUANTITIES HAVE BEEN PROVIDED FOR THE CONTRACTOR'S REFERENCE:

2 BENCHES
6 TRASH CANS
3 COMMEMORATIVE PLAQUES
8 GARDEN POTS
2 BICYCLE RACKS

ITEM 202 - REMOVAL MISC.: CONCRETE PLANTER BOX REMOVED

THIS WORK SHALL CONSIST OF REMOVAL OF EXISTING PLANTER BOXES WITHIN EXISTING PAVER SIDEWALK AREAS. THE CONTRACTOR IS RESPONSIBLE FOR REMOVAL AND DISPOSAL OF ALL MATERIALS INCLUDING CONCRETE, MULCH, AND SOIL. ANY OTHER CONTENTS SUCH AS GARDEN POTS SHALL BE PAID FOR SEPARATE OF THIS ITEM, UNDER ITEM 202 - REMOVAL MISC.: REMOVE AND RESET STREETSCAPE ITEMS.

THE CONTRACTOR SHALL PROVIDE EMBANKMENT TO FILL THE VOID DUE TO THIS WORK. EMBANKMENT SHALL BE PROVIDED AT THE NECESSARY DEPTH TO RESTORE THE PAVER WALKWAY AT GRADE. THE PAYMENT FOR PAVER SIDEWALK RESTORATION IS NOT INCLUDED IN THIS ITEM. FOR BIDDING PURPOSES, EMBANKMENT IS ASSUMED TO BE 4" DEPTH FOR EACH PLANTER BOX.

PAYMENT FOR THIS ITEM WILL BE PER EACH PLANTER BOX.

ITEM 202 - REMOVAL MISC.: TREE WELL REMOVED

THIS WORK SHALL CONSIST OF REMOVAL OF EXISTING TREE WELLS. THE CONTRACTOR IS RESPONSIBLE FOR REMOVAL AND DISPOSAL OF ALL MATERIALS INCLUDING METAL GRATES, CONCRETE, MULCH, AND SOIL. THIS WORK DOES NOT INCLUDE TREE REMOVAL. PER THE ODOT CMS, EMBANKMENT NECESSARY TO FILL VOIDS WITHIN THIS AREA SHALL BE PAID FOR WITHIN THE 201 TREE REMOVAL ITEM, NOT THIS 202 ITEM.

PAYMENT FOR THIS ITEM WILL BE PER EACH TREE WELL.

ITEM 202 - REMOVAL MISC.: PAVER WALKWAY REMOVED

THIS WORK SHALL CONSIST OF REMOVAL OF EXISTING PAVER SIDEWALK IN THE AREAS DESIGNATED IN THE PLANS. PAYMENT FOR THIS ITEM SHALL BE PER SQUARE FOOT AND INCLUDE ALL LABOR, EQUIPMENT, AND MATERIALS NECESSARY TO REMOVE AND DISPOSE OF THE PAVER SIDEWALK.

ITEM 202 - REMOVAL MISC.: REMOVE AND RESET LANDSCAPING ROCK

THIS WORK SHALL CONSIST OF REMOVAL, STORAGE, AND RESET OF EXISTING ROCKS WITHIN PRIVATE LANDSCAPED AREAS. THE CONTRACTOR SHALL REMOVE THESE ITEMS IN ACCORDANCE WITH SECTION 202 OF THE ODOT CMS AND COORDINATE WITH THE PROPERTY OWNER ON STORAGE OF THESE ITEMS. THE CONTRACTOR IS TO CONFIRM LOCATIONS WITH THE PROPERTY OWNER BEFORE RESETTING THE ITEMS. THIS WORK SHALL BE PAID FOR PER EACH ITEM REMOVED.

ITEM 202 - PARKING BLOCK REMOVED AND RESET

THIS WORK SHALL CONSIST OF REMOVAL, STORAGE, AND RESETTING PARKING BLOCKS. THIS ITEM SHALL INCLUDE ALL LABOR, MATERIALS, AND EQUIPMENT TO PERFORM THIS WORK. PAYMENT FOR THIS ITEM WILL BE PER EACH BLOCK REMOVED AND RESET.

ITEM 609 - COMBINATION CURB AND GUTTER, TYPE 2, AS PER PLAN

COMBINATION CURB AND GUTTER, TYPE 2, AS PER PLAN SHALL BE INSTALLED IN ACCORDANCE WITH SECTION 609 OF THE ODOT CMS AND IN ACCORANCE WITH THE CITY OF TROY CONSTRUCTION STANDARD DRAWINGS, CURB AND GUTTER DETAILS ON PAGE NO. 300-13. THE CITY OF TROY CONSTRUCTION STANDARD DRAWING SHALL SUPERCEDE THE ODOT CMS FOR THIS ITEM.

ITEM 609 - COMBINATION CURB AND GUTTER, TYPE 3, AS PER PLAN

COMBINATION CURB AND GUTTER, TYPE 3, AS PER PLAN SHALL BE INSTALLED IN ACCORDANCE WITH SECTION 609 OF THE ODOT CMS AND IN ACCORANCE WITH THE CURB DETAIL ON SHEET 42. THE DRAWING PROVIDED IN THESE PLANS SHALL SUPERCEDE THE ODOT CMS FOR THIS ITEM.

ITEM 609 - CURB, TYPE 6, AS PER PLAN

CURB, TYPE 6, AS PER PLAN SHALL BE INSTALLED IN ACCORDANCE WITH SECTION 609 OF THE ODOT CMS AND IN ACCORANCE WITH THE CITY OF TROY CONSTRUCTION STANDARD DRAWINGS, BARRIER CURB DETAILS ON PAGE NO. 300-13. THE CITY OF TROY CONSTRUCTION STANDARD DRAWING SHALL SUPERCEDE THE ODOT CMS FOR THIS ITEM.

ITEM 609 - CURB, MISC.: STREETSCAPE CURB

CURB, MISC.: STREETSCAPE CURB SHALL BE INSTALLED IN ACCORDANCE WITH SECTION 609 OF THE ODOT CMS AND IN ACCORANCE WITH THE DETAIL I ON SHEET 42. THE DRAWING IN THE PLANS SHALL SUPERCEDE THE ODOT CMS FOR THIS ITEM.

THIS WORK INCLUDES ALL LABOR, MATERIAL, AND EQUIPMENT NECESSARY TO INSTALL STREETSCAPE CURB. THIS CURB SHALL BE INSTALLED WHILE MINIMIZING DISTURBANCE TO THE EXISTING PAVER SIDEWALK. THE COLOR OF THE CONCRETE PAVER INCLUDED IN THIS WORK SHALL BE CHARCOAL GRAY (SEE PAVER SPECIFICATIONS IN ITEM 608 ON THIS SHEET). THE ELEVATION OF THE BACK OF STREETSCAPE CURB SHALL MATCH THE EXISTING SIDEWALK ELEVATION AT THE SAW CUT. WORK TO RESTORE ANY PAVERS DAMAGED DURING CURB INSTALLATION SHALL BE PROVIDED BY THE CONTRACTOR AT NO ADDITIONAL COST. PAYMENT FOR THIS WORK SHALL BE PAID FOR PER FOOT CURB INSTALLED. PAYMENT SHALL INCLUDE ALL PAVERS, FILTER, FABRIC, SAND, 4" CONCRETE BASE, AND TYPE 6 CURB AS SHOWN IN THE DRAWINGS.

ITEM 608 - CURB RAMP, AS PER PLAN: 9" CONCRETE

THIS ITEM INCLUDES THE LABOR, MATERIALS, AND EQUIPMENT NECESSARY TO CONSTRUCT CURB RAMPS PER SECTION 608 OF THE 2019 ODOT CONSTRUCTION AND MATERIAL SPECIFICATIONS MANUAL. THIS ITEM SHALL BE CONSTRUCTED WITH CONCRETE 9-INCHES THICK. THIS ITEM APPLIES TO THE FOLLOWING CURB RAMPS: CR1, CR15, CR18, AND CR19.

EXISTING DOWNTOWN ELECTRIC CONDUIT

INFORMATION PROVIDED BY AES INDICATES EXISTING ELECTRIC CONDUIT IS BURIED AT A DEPTH OF 8" TO THE TOP OF THE CONDUIT FROM STA. 523+40 TO STA. 527+50. CONTRACTOR SHALL PROTECT AND SUPPORT EXISTING ELECTRIC CONDUIT DURING CONSTRUCTION ACTIVITIES. THIS WORK SHALL BE INCIDENTAL TO THE PAVEMENT AND ROADWAY WORK IN THIS AREA.

ITEM 608 - WALKWAY, MISC.: PAVER SYSTEM AND ITEM 608 - CURB RAMP, AS PER PLAN: PAVER CURB RAMP

CONCRETE PAVERS SUPPLIED FOR THE SIDEWALK CONSTRUCTION SHALL BE 4" BY 8" ASTM C-936 HOLLANDSTONE UNILOCK PAVERS (3-1/8" MIN. THICKNESS) AS PRODUCED BY UNI-GROUP USA, OR APPROVED EQUAL.

THE FINAL RED (NOT ORANGE) AND CHARCOAL GRAY COLOR OF THE PAVERS WILL BE CHOSEN BY THE CITY AFTER REVIEW OF SAMPLES SUPPLIED BY THE CONTRACTOR. THE PAVERS SHALL NOT BE ORDERED UNTIL APPROVED. THE CONCRETE BASE SHALL BE A FOUR INCH THICK CONCRETE SIDEWALK BASE CONFORMING TO ITEM 608, PLACED MONOLITHICALLY WITH THE OTHER SIDEWALK.

THE CONTRACTOR SHALL PREPARE A SAMPLE PATTERN WITH APPROVED PAVERS TO CONFIRM THE EXACT DIMENSIONS PRIOR TO CONSTRUCTING THE CONCRETE BASE AND WALK. THE PAVERS SHALL BE CONSTRUCTED ON A ONE INCH THICK SAND BED ON A 712.09 TYPE A FILTER FABRIC ON A CONCRETE BASE AND AGGREGATE BASE AS SHOWN IN THE PAVEMENT DETAILS.

PAYMENT WILL BE ON A SQUARE FOOT BASIS, INCLUDING ALL PAVERS, FILTER, FABRIC, SAND, 4" CONCRETE BASE AND ALL OTHER FORMING AND MATERIAL COSTS NECESSARY TO CONSTRUCT THE BASE AND PAVER SYSTEM PER THE PAVEMENT DETAILS.

PAVER RESTORATION

THIS WORK SHALL CONSIST OF RESTORATION OF THE EXISTING PAVER SIDEWALK FROM STA. 526+50 (CHERRY ST.) TO THE END OF THE PROJECT LIMITS DUE TO THE REMOVAL OF EXISTING ROADWAY AND TRAFFIC ITEMS. ITEMS REMOVED INCLUDE, BUT ARE NOT LIMITED TO, SIGNAL POLES, TRAFFIC CONTROLLERS, CURB RAMPS, AND PLANTERS. THE WORK FOR REMOVAL OF THESE ITEMS IS NOT PAID FOR UNDER THIS 608 WALKWAY ITEM AND SHALL BE PAID FOR OTHERWISE AS DESCRIBED IN THE PLANS.

CONCRETE PAVERS SUPPLIED FOR THE SIDEWALK CONSTRUCTION SHALL BE 4" BY 8" ASTM C-936 HOLLANDSTONE UNILOCK PAVERS (3-1/8" MIN. THICKNESS) AS PRODUCED BY UNI-GROUP USA, OR APPROVED EQUAL.

THE FINAL RED (NOT ORANGE) AND CHARCOAL GRAY COLOR OF THE PAVERS WILL BE CHOSEN BY THE CITY AFTER REVIEW OF SAMPLES SUPPLIED BY THE CONTRACTOR. THE PAVERS SHALL NOT BE ORDERED UNTIL APPROVED. THE CONCRETE BASE SHALL BE A FOUR INCH THICK CONCRETE SIDEWALK BASE CONFORMING TO ITEM 608.

THE CONTRACTOR SHALL PREPARE A SAMPLE PATTERN WITH APPROVED PAVERS TO CONFIRM THE EXACT DIMENSIONS PRIOR TO CONSTRUCTING THE CONCRETE BASE AND WALK. THE PAVERS SHALL BE CONSTRUCTED ON A ONE INCH THICK SAND BED ON A 712.09 TYPE A FILTER FABRIC ON A CONCRETE BASE AND AGGREGATE BASE AS SHOWN IN THE PAVEMENT DETAILS.

THIS WORK SHALL BE PERFORMED AT THE DIRECTION OF THE CITY. PAYMENT WILL BE ON A SQUARE FOOT BASIS, INCLUDING ALL PAVERS, FILTER, FABRIC, SAND, 4" CONCRETE BASE AND ALL OTHER FORMING AND MATERIAL COSTS NECESSARY TO CONSTRUCT THE BASE AND PAVER SYSTEM PER THE PAVEMENT DETAILS. DETECTABLE WARNING, COLOR MATCHING THE RED PAVER, SHALL BE INCLUDED IN THIS COST. THE FOLLOWING QUANTITIES HAVE BEEN CARRIED TO THE GENERAL SUMMARY:

ITEM 608 - WALKWAY, MISC.: PAVER RESTORATION	50 SF

CALCULATED ATW
CHECKED JDH

GENERAL NOTES

MIA-41-09.49

S:\CIN\4300--4399\4354\004\Drawings\CAD\108662\roadway\sheets\08662GN002.dgn Sheet 2/8/2022 4:32:57 PM Allisonw

REVIEW OF DRAINAGE FACILITIES

BEFORE ANY WORK IS STARTED ON THE PROJECT AND AGAIN BEFORE FINAL ACCEPTANCE BY THE STATE, REPRESENTATIVES OF THE STATE AND THE CONTRACTOR, ALONG WITH LOCAL REPRESENTATIVES, SHALL MAKE AN INSPECTION OF ALL EXISTING SEWERS WHICH ARE TO REMAIN IN SERVICE AND WHICH MAY BE AFFECTED BY THE WORK. THE CONDITION OF THE EXISTING CONDUITS AND THEIR APPURTENANCE SHALL BE DETERMINED FROM FIELD OBSERVATIONS. RECORDS OF THE INSPECTION SHALL BE KEPT IN WRITING BY THE STATE.

ALL NEW CONDUITS, INLETS, CATCH BASINS, AND MANHOLES CONSTRUCTED AS A PART OF THE PROJECT SHALL BE FREE OF ALL FOREIGN MATTER AND IN A CLEAN CONDITION BEFORE THE PROJECT WILL BE ACCEPTED BY THE STATE.

ALL EXISTING SEWERS INSPECTED INITIALLY BY THE ABOVE MENTIONED PARTIES SHALL BE MAINTAINED AND LEFT IN A CONDITION REASONABLY COMPARABLE TO THAT DETERMINED BY THE ORIGINAL INSPECTION. ANY CHANGE IN THE CONDITION RESULTING FROM THE CONTRACTOR'S OPERATIONS SHALL BE CORRECTED BY THE CONTRACTOR TO THE SATISFACTION OF THE ENGINEER.

PAYMENT FOR ALL OPERATIONS DESCRIBED ABOVE SHALL BE INCLUDED IN THE CONTRACT PRICE FOR THE PERTINENT 611 CONDUIT ITEMS.

ITEM SPECIAL - FILL AND PLUG EXISTING CONDUIT

THIS ITEM SHALL CONSIST OF THE CONSTRUCTION OF BULKHEADS IN AN EXISTING CONDUIT AND FILLING THE AREA THUS SEALED OFF WITH ITEM 613, SAND OR OTHER MATERIAL APPROVED BY THE ENGINEER.

BULKHEADS SHALL BE LOCATED AT THE LIMITS OF THE AREA TO BE FILLED AS INDICATED ON THE PLANS. THE BULKHEADS SHALL CONSIST OF BRICK OR CONCRETE MASONRY WITH A MINIMUM THICKNESS OF 12 INCHES.

THE FILL MATERIAL SHALL BE PUMPED INTO PLACE, OR PLACED BY OTHER MEANS APPROVED BY THE ENGINEER, SO THAT, AFTER SETTLEMENT, AT LEAST 90 PERCENT OF THE CROSS-SECTIONAL AREA OF THE CONDUIT, FOR ITS ENTIRE LENGTH, SHALL BE FILLED. THE LENGTH OF FILLED AND PLUGGED CONDUIT TO BE PAID FOR SHALL BE THE ACTUAL NUMBER OF FEET (MEASURED ALONG THE CENTERLINE OF EACH CONDUIT FROM OUTER FACE TO OUTER FACE OF BULKHEADS) FILLED AND PLUGGED AS DESCRIBED ABOVE.

IN LIEU OF FILLING AND PLUGGING THE EXISTING CONDUIT, THE PIPE MAY BE CRUSHED AND BACKFILLED IN ACCORDANCE WITH THE PROVISIONS OF 203, OR IT MAY BE REMOVED. THE LENGTH, MEASURED AS PROVIDED ABOVE, SHALL BE PAID FOR AT THE CONTRACT PRICE PER FOOT FOR, ITEM SPECIAL, FILL AND PLUG EXISTING CONDUIT. THE CONTRACTOR SHALL PERFORM THIS WORK FOR THE FOLLOWING EXISTING DIAMETER PIPES. EACH DIAMETER OF PIPE SHALL BE PAID FOR AS A SEPARATE PAY ITEM.

8"	15"
10"	18"
12"	24"

SOME EXISTING STORM SEWER CONDUIT IS SHOWN TO BE REMOVED IN THE PLANS. THE CONTRACTOR MAY FILL AND PLUG SECTIONS OF EXISTING STORM SEWER CONDUIT SHOWN TO BE REMOVED IF APPROVED BY THE CITY. THIS WORK WILL NOT BE AT ANY ADDITIONAL COST TO THE CITY.

PAVEMENT RESTORATION FOR PIPE INSTALLATIONS AND/OR REMOVALS

THE FOLLOWING QUANTITY HAS BEEN PROVIDED FOR PAVEMENT RESTORATION FOLLOWING INSTALLATION AND/OR REMOVAL OF PIPES.

ITEM 302 ASPHALT CONCRETE BASE, PG64-22 1235 CU. YDS.

THE ABOVE QUANTITY IS BASED ON A 302 THICKNESS OF 12 INCHES AND A PAVEMENT RESTORATION WIDTH THAT INCLUDES THE TRENCH WIDTH PLUS TWO FEET ON EACH SIDE OF THE TRENCH.

PROVIDE ANY MATERIALS USED OUTSIDE THE LIMITS STATED ABOVE AT NO ADDITIONAL COST.

PAVEMENT RESTORATION FOR DRAINAGE STRUCTURE INSTALLATIONS AND REMOVALS

THE FOLLOWING QUANTITY IS PROVIDED FOR PAVEMENT RESTORATION FOLLOWING INSTALLATION OF ITEM 604 DRAINAGE STRUCTURES.

ITEM 302 ASPHALT CONCRETE BASE, PG64-22 305 CU. YDS.

THE ABOVE QUANTITY IS BASED ON A 302 THICKNESS OF 12 INCHES AND A WIDTH OF TWO FEET AROUND THE PERIMETER OF THE DRAINAGE STRUCTURE.

PROVIDE ANY MATERIALS USED OUTSIDE THE LIMITS STATED ABOVE AT NO ADDITIONAL COST.

POST CONSTRUCTION STORM WATER TREATMENT

THIS PLAN UTILIZES STRUCTURAL BEST MANAGEMENT PRACTICES (BMP'S) FOR POST CONSTRUCTION STORM WATER TREATMENT.

MANUFACTURED WATER QUALITY STRUCTURE, TYPE 4, AS PER PLAN

THIS PLAN UTILIZES MANUFACTURED WATER QUALITY STRUCTURES FOR WATER QUALITY TREATMENT. AREAS HAVE BEEN SHOWN IN THE PLANS FOR PLACEMENT OF AN OFF-LINE SYSTEM.

THE CONTRACTOR SHALL FURNISH AND INSTALL A SYSTEM THAT CAN BE ACCOMODATED BY THE 19' X 20' AREA PROVIDED IN THE DRAWINGS. A SYSTEM SHALL BE SELECTED FROM THE ODOT QUALIFIED PRODUCT LIST FOR SUPPLEMENTAL SPECIFICATION 995 THAT MEETS THE REQUIREMENTS STATED IN THE CONTRACT DOCUMENTS.

PAYMENT FOR THESE DEVICES SHALL BE MADE AT THE CONTRACT UNIT PRICE FOR ITEM 895, MANUFACTURED WATER QUALITY STRUCTURE, TYPE 4, AS PER PLAN

MANHOLE REMOVED, AS PER PLAN

THE EXISTING MANHOLES SHOWN TO BE REMOVED IN THE PLANS MAY BE ABANDONED, AT THE DISCRETION OF THE CONTRACTOR AND THE CITY, ACCORDING TO SECTION 202.11 OF THE ODOT C&MS. THE CONTRACTOR MUST RECEIVE APPROVAL FROM THE CITY BEFORE WORK BEGINS. EXISTING MANHOLES TO BE ABANDONED SHALL BE REMOVED TO THE PROPOSED SUBGRADE.

UTILITIES ADJUSTED TO GRADE

THIS WORK SHALL CONSIST OF ADJUSTING EXISTING UTILITY MANHOLES, HANDHOLES, AND OTHER STRUCTURES TO PROPOSED GRADE. PAYMENT FOR THESE ITEMS SHALL CONFORM TO THE ODOT CMS AND INCLUDE ALL LABOR, MATERIAL, AND EQUIPMENT TO COMPLETE THE WORK. PAYMENT SHALL BE PER EACH STRUCTURE ADJUSTED.

ITEM 638 - WATER WORK, MISC.: WATER MANHOLE ADJUSTED TO GRADE
ITEM 611 - MANHOLE, MISC.: TELE MANHOLE ADJUSTED TO GRADE
ITEM 611 - MANHOLE, MISC.: PULL BOX ADJUSTED TO GRADE
ITEM 611 - MANHOLE, MISC.: SPRINKLER CONTROL ADJUSTED TO GRADE
ITEM 611 - SPECIAL - GAS VALVE BOX ADJUSTED TO GRADE

ITEM 202 - REMOVAL MISC.: SPRINKLER SYSTEM REMOVED

THIS WORK SHALL CONSIST OF REMOVAL OF THE EXISTING UNDERGROUND SPRINKLER SYSTEM AT 600 W. MAIN STREET, KETTERING MEDICAL CENTER. THE CONTRACTOR SHALL REMOVE AND DISPOSE OF ALL ELEMENTS ASSOCIATED WITH THE SPRINKLER SYSTEM, INCLUDING BUT NOT LIMITED TO, CONVEYANCE PIPES AND SPRINKLER HEADS WITHIN THE PROJECT LIMITS. THE CONTRACTOR SHALL LOCATE THE EXISTING WATER LINE THAT SERVES THE SPRINKLER SYSTEM. THIS LINE SHALL BE CUT AND PLUGGED FOR FUTURE USE. THE CONTRACTOR SHALL COORDINATE WITH THE PROPERTY OWNER WHEN PERFORMING THIS WORK.

THE COST FOR THIS ITEM SHALL BE PAID FOR AS LUMP SUM AND SHALL INCLUDE ALL WORK DESCRIBED ABOVE.

ITEM 611 12" CONDUIT, TYPE B, AS PER PLAN

PROVIDE DUCTILE IRON CONDUIT THAT IS WATER WORKS GRADE 150 PSI PRESSURE RATED MEETING AWWA STANDARDS AND IS PRESSURE RATED TO ENSURE WATER TIGHTNESS.

ITEM 611 - CATCH BASIN, NO. 3, AS PER PLAN

THIS ITEM INCLUDES THE LABOR, MATERIALS, AND EQUIPMENT NECESSARY TO CONSTRUCT CATCH BASIN, NO. 3, AS PER PLAN IN ACCORDANCE WITH SECTION 611 OF THE 2019 ODOT CMS. ALL HARDWARE SHALL BE PROVIDED AS 304 STAINLESS STEEL UNLESS OTHERWISE NOTED ON THE DRAWINGS. INLET GRATES SHALL BE SUFFICIENTLY TACK WELDED TOGETHER IN ACCORDANCE WITH ITEM 711.08.

ITEM 611 - CATCH BASIN, NO. 3, AS PER PLAN (CB-3 MODIFIED)

THIS ITEM INCLUDES THE LABOR, MATERIALS, AND EQUIPMENT NECESSARY TO CONSTRUCT CATCH BASIN, NO. 3, AS PER PLAN IN ACCORDANCE WITH SECTION 611 OF THE 2019 ODOT CMS AND IN ACCORDANCE WITH THE CATCH BASIN DETAIL ON SHEET 127. THE DRAWING PROVIDED IN THESE PLANS SHALL SUPERCEDE THE ODOT CMS FOR THIS ITEM. ALL HARDWARE SHALL BE PROVIDED AS 304 STAINLESS STEEL UNLESS OTHERWISE NOTED ON THE DRAWINGS. INLET GRATES SHALL BE SUFFICIENTLY TACK WELDED TOGETHER IN ACCORDANCE WITH ITEM 711.08.

ITEM 611 - XX" CONDUIT TYPE B (ALTERNATE 1)

ALTERNATE 1 FOR CONDUIT, TYPE B OF A SPECIFIED DIAMETER SHALL CONFORM TO SECTION 611 OF THE ODOT CMS.

CONDUIT, MISC.: XX" CONDUIT TYPE B (ALTERNATE 2)

IN ADDITION TO THE REQUIREMENTS OF ALTERNATE 1 FOR CONDUIT, TYPE B OF A SPECIFIED DIAMETER, ALTERNATE 2 SHALL BE OF A MATERIAL SPECIFIED IN THE CITY OF TROY'S STANDARD CONSTRUCTION DRAWINGS, UNLESS OTHERWISE NOTED. ALL 611 CONDUIT SHOWN IN THE DRAWINGS, EXCLUDING AS PER PLAN ITEMS, SHALL MEET THE REQUIREMENTS OF THIS NOTE. FOR REFERENCE, THE ODOT CMS NUMBERS PERMITTED ARE LISTED BELOW:

706.02
706.04
707.33
707.41
707.65
707.69

ITEM 611 - CONDUIT, MISC.: VIDEO INSPECTION OF SANITARY LATERALS

BEFORE CONSTRUCTION ACTIVITIES BEGIN, OR ON A DATE APPROVED BY THE ENGINEER, THE CONTRACTOR SHALL COMPLETE TELEVISING OF THE SANITARY SEWER LATERALS WITHIN THE CONSTRUCTION LIMITS. THE TELEVISING SHALL BE PROVIDED TO THE CITY IN THE FORM OF A DVD WITH AN ACCOMPANYING WRITTEN LOG OF THE SYSTEM. THE DVD MUST SHOW THE LOCATION OF ALL LATERALS, THEIR "CLOCK" POSITIONS, AND DISTANCE FROM THE MANHOLE. THE CONTRACTOR SHALL ALSO SUPPLY THE CITY WITH A WRITTEN COPY OF ALL LATERAL LOCATIONS, INCLUDING HORIZONTAL AND VERTICAL LOCATIONS WITHIN THE CONSTRUCTION LIMITS, AND IDENTIFY ANY CONFLICTS WITH THE PROPOSED WORK. THIS SHALL BE ACCOMPLISHED THROUGH THE USE OF A LATERAL LAUNCH CAMERA.

THE CONTRACTOR SHALL NOTIFY THE CITY A MINIMUM OF SEVEN (7) DAYS PRIOR TO TELEVISING EFFORTS. THE CITY WILL PROVIDE SEWER CLEANING SERVICES TO FACILITATE THE TELEVISING OPERATION.

UPON REVIEW OF THE DVD, THE CITY ENGINEER WILL NOTIFY THE CONTRACTOR OF ANY ADDITIONAL LOCATIONS THAT MAY BE IMPACTED BY CONSTRUCTION ACTIVITIES AND/OR LATERALS THAT SHOULD BE REPLACED. AFTER CONSTRUCTION ACTIVITIES ARE COMPLETED, OR ON A DATE APPROVED BY THE ENGINEER, THE CONTRACTOR SHALL AGAIN COMPLETE TELEVISING OF THE SANITARY SEWER LATERALS WITHIN THE CONSTRUCTION LIMITS. THE REQUIREMENTS OF THE PRE-CONSTRUCTION TELEVISING SHALL ALSO APPLY TO THE POST-CONSTRUCTION TELEVISING. THE CONTRACTOR SHALL PROVIDE TWO DIGITAL COPIES OF THE POST-CONSTRUCTION SEWER VIDEO ON DVD TO THE CITY.

THE FOLLOWING QUANTITIES ARE INCLUDED IN THE GENERAL SUMMARY FOR LATERAL INSPECTION AND ESTIMATED LATERAL REPLACEMENT:

ITEM 611 - CONDUIT, MISC.: VIDEO INSPECTION OF SANITARY LATERALS LUMP SUM

ITEM 611 - 6" CONDUIT, TYPE B, AS PER PLAN 50 FT

CALCULATED ATW
CHECKED JDH

GENERAL NOTES

MIA-41-09.49

S:\CIN\4300--4399\4354\004\Drawings\CAD\108662\roadway\sheets\08662GN004.dgn Sheet 2/2/2022 11:35:06 AM Allisonw

PETROLEUM CONTAMINATED SOILS

ENVIRONMENTAL STUDIES INDICATE PETROLEUM CONTAMINATED SOILS WILL BE ENCOUNTERED DURING CONSTRUCTION ACTIVITIES ADJACENT TO THE FOLLOWING LOCATIONS:

-KETTERING MEDICAL CENTER AT 600 WEST MAIN (STA. 504+00 TO STA. 512+00)
-VALVOLINE AT 750 WEST MAIN (STA. 504+50 TO STA. 506+50)
-ADVANCED AUTO PARTS AT 722 WEST MAIN (STA. 506+00 TO STA. 508+50)
-PARKING LOT SOUTH OF STA. 520+00
OFFICES AT 206 W. MAIN (STA. 519+40 TO STA. 520+10)
-TROY/MIAMI HISTORICAL SOCIETY AT 100 WEST MAIN (STA. 525+70 TO STA. 526+10)

THE CONTRACTOR SHALL MANAGE SOILS FROM DEEP EXCAVATION (6 FEET OR GREATER) OR ACCORDING TO THE FOLLOWING NOTES:

ALL MATERIAL EXCAVATED BY THE CONTRACTOR MAY BE STOCKPILED IN AN AREA PROVIDED BY THE CONTRACTOR AND APPROVED BY THE ENGINEER. THE ENGINEER MAY PERMIT TEMPORARY STORAGE OF THE EXCAVATED MATERIAL IN A LINED AND COVERED ROLL-OFF BOX. THE ENGINEER MAY PERMIT TEMPORARY STORAGE OF THE EXCAVATED MATERIAL ON AN IMPERMEABLE MEMBRANE. THE MEMBRANE SHALL BE SURROUNDED BY BALES OF STRAW TO PREVENT THE SUSPECTED SOILS FROM COMING IN CONTACT WITH THE ORIGINAL SOILS. AN IMPERMEABLE MEMBRANE SHALL BE PLACED OVER THE STOCKPILE TO PREVENT CONTACT WITH PRECIPITATION AND/OR SURFACE RUN-OFF. THE ENGINEER MAY PERMIT THE CONTRACTOR TO DIRECT LOAD THE EXCAVATED CONTAMINATED MATERIAL INTO TRUCKS.

THIS MATERIAL SHALL BE PROPERLY TESTED, TRANSPORTED, AND DISPOSED OF IN A LICENSED (BY THE LOCAL HEALTH DEPARTMENT) AND PERMITTED (BY THE OHIO ENVIRONMENTAL PROTECTION AGENCY) SOLID WASTE FACILITY. IF REQUIRED BY THE SOLID WASTE FACILITY, THE CONTRACTOR SHALL BE RESPONSIBLE FOR CONDUCTING SAMPLING AND ANALYSIS OF THIS MATERIAL. OBTAIN ALL SIGNATURES ON THE MANIFEST FOR TRANSPORTING AND DISPOSAL OF THE MATERIAL AND PROVIDE A FINAL COPY TO THE ENGINEER.

THE CONTRACTOR SHALL FURNISH ALL THE LABOR, EQUIPMENT, AND MATERIALS NECESSARY TO PROPERLY HANDLE, STORE (IF NECESSARY), TEST FOR DISPOSAL, TRANSPORT, AND DISPOSE OF REGULATED MATERIALS, INCLUDING ANY REQUIRED PERMITS, APPROVALS, OR FEES WITHIN THE LIMITS IDENTIFIED ABOVE. PAYMENT FOR THIS WORK SHALL BE MADE AT THE CONTRACT PRICE BID PER TON OR PER GALLON. THE BASIS FOR CONVERSION FROM TONS TO CUBIC YARDS IS 1.5 TON/CUBIC YARD. THE FOLLOWING ESTIMATED QUANTITY HAS BEEN INCLUDED IN THE GENERAL SUMMARY FOR THE WORK NOTED ABOVE:

690E65016 - ITEM SPECIAL - WORK INVOLVING PETROLEUM CONTAMINATED SOIL 50 TON

ORPHAN UNDERGROUND STORAGE TANKS

ENVIRONMENTAL STUDIES INDICATE ORPHAN UNDERGROUND STORAGE TANKS (USTS) ARE PRESENT WITHIN THE PROPOSED CONSTRUCTION LIMITS AT THE FOLLOWING LOCATIONS (APPROXIMATE):

-VALVOLINE AT 750 WEST MAIN (STA. 504+50 TO STA. 506+50)
-ADVANCED AUTO PARTS AT 722 WEST MAIN (STA. 506+00 TO STA. 508+50)
-PARKING LOT SOUTH OF STA. 520 (STA. 519+40 TO STA. 520+10)
-OFFICES AT 206 W. MAIN (STA. 519+40 TO STA. 520+10)
-TROY/MIAMI HISTORICAL SOCIETY AT 100 WEST MAIN (STA. 525+70 TO STA. 526+10)

THE CONTRACTOR SHALL REMOVE ANY ORPHAN USTS ENCOUNTERED DURING CONSTRUCTION IN ACCORDANCE WITH ODOT CMS 202.08 AND PROVIDE AT LEAST TWO (2) COPIES OF THE CLOSURE REPORT TO THE ENGINEER, ONE FOR SUBMITTAL TO THE BUREAU OF UNDERGROUND STORAGE TANKS REGULATIONS (BUSTR) AND THE SECOND FOR ODOT'S RECORDS.

ALL COSTS AND WORK ASSOCIATED WITH THE COMPLIANCE OF THE AFOREMENTIONED RULES OR REGULATIONS SHALL BE INCLUDED IN THE UNIT PRICE FOR ITEM SPECIAL - REGULATED UNDERGROUND STORAGE TANK REMOVAL. UNDERGROUND STORAGE TANKS AND CONTENTS SHALL BE REMOVED IN THEIR ENTIRETY, AND SHALL BECOME THE PROPERTY OF THE CONTRACTOR AND BE DISPOSED OF BY HIM. IF ANY CONTAMINATED WATER OR SOIL DISPOSAL OR REMEDIATION IS REQUIRED AS A RESULT OF THE UNDERGROUND STORAGE TANK REMOVAL, THEN THESE ITEMS OR WORK SHALL BE HANDLED UNDER OTHER ITEMS IN THE CONTRACT.

202E67000 ITEM SPECIAL - REGULATED UNDERGROUND STORAGE TANK REMOVAL 5 EACH

ENDANGERED BAT HABITAT REMOVAL

THE PROJECT IS LOCATED WITHIN THE KNOWN HABITAT RANGES OF THE FEDERALLY LISTED AND PROTECTED INDIANA BAT AND NORTHERN LONG-EARED BAT. THE CONTRACTOR SHALL NOT REMOVE TREES UNDER THIS PROJECT FROM APRIL 1 THROUGH SEPTEMBER 30. ALL NECESSARY TREE REMOVAL SHALL OCCUR FROM OCTOBER 1 THROUGH MARCH 31. THIS REQUIREMENT IS NECESSARY TO AVOID AND MINIMIZE IMPACTS TO THESE SPECIES AS REQUIRED BY THE ENDANGERED SPECIES ACT. FOR THE PURPOSES OF THIS NOTE, A TREE IS DEFINED AS A LIVE, DYING, OR DEAD WOODY PLANT, WITH A TRUNK THREE INCHES OR GREATER IN DIAMETER AT A HEIGHT OF 4.5 FEET ABOVE THE GROUND SURFACE, AND WITH A MINIMUM HEIGHT OF 13 FEET.

REGULATED WATER

ENVIRONMENTAL STUDIES HAVE SHOWN THAT THERE IS A POTENTIAL OF ENCOUNTERING CONTAMINATED GROUNDWATER DURING EXCAVATIONS FOR CONSTRUCTION ACTIVITIES IN PROXIMITY TO THE KETTERING MEDICAL CENTER AT 600 W. MAIN (STA. 504+00 TO STA. 512+00).

IF CONSTRUCTION WITHIN THE AFOREMENTIONED LIMITS REQUIRE DEWATERING, THE CONTRACTOR SHALL COLLECT AND DISPOSE OF THE WATER IN ACCORDANCE WITH ALL APPLICABLE STATE AND FEDERAL LAWS AND REGULATIONS PERTAINING TO ENVIRONMENTAL PROTECTION. THE CONTRACTOR SHALL BE RESPONSIBLE FOR THE PROPER TESTING, TRANSPORTATION, AND DISPOSAL OF THE WATER AT A LICENSED (BY THE LOCAL HEALTH DEPARTMENT) AND PERMITTED (BY THE OHIO ENVIRONMENTAL PROTECTION AGENCY) FACILITY.

THE CONTRACTOR SHALL BE RESPONSIBLE FOR OBTAINING ALL NECESSARY PERMITS AND APPROVALS AND TO TRANSPORT THE MATERIAL TO A LICENSED AND PERMITTED TREATMENT OR DISPOSAL FACILITY. COPIES OF ALL WASTE MANIFESTS ARE TO BE PROVIDED TO THE ODOT CONSTRUCTION ENGINEER.

THE CONTRACTOR SHALL FURNISH ALL THE LABOR, EQUIPMENT, AND MATERIALS NECESSARY TO PROPERLY HANDLE, STORE (IF NECESSARY), TEST FOR DISPOSAL, TRANSPORT, AND DISPOSE OF REGULATED MATERIALS, INCLUDING ANY REQUIRED PERMITS, APPROVALS, OR FEES WITHIN THE LIMITS IDENTIFIED ABOVE. PAYMENT FOR THIS WORK SHALL BE MADE AT THE CONTRACT PRICE BID PER PER GALLON. THE FOLLOWING ESTIMATED QUANTITY HAS BEEN INCLUDED IN THE GENERAL SUMMARY FOR THE WORK NOTED ABOVE:

690E65024 - ITEM SPECIAL - WORK INVOLVING REGULATED WATER 1000 GAL

ABANDONMENT OF GROUNDWATER MONITORING WELLS

THREE MONITORING WELLS SHALL BE ABANDONED IN ACCORDANCE WITH THE OEPA TECHNICAL GUIDANCE MANUAL FOR HYDROLOGIC INVESTIGATIONS AND GROUND WATER MONITORING, CHAPTER 9: SEALING BOREHOLES AND DECOMMISSIONED MONITORING WELLS. THESE MONITORING WELLS ARE LOCATED AT THE FOLLOWING STATIONS:

STA. 503+32 LT
STA. 503+49 RT
STA. 503+84 LT

THE CONTRACTOR WILL BE RESPONSIBLE FOR SUBMITTING THE WELL SEALING REPORTS TO THE OHIO DEPARTMENT OF NATURAL RESOURCES, AS REQUIRED UNDER OHIO REVISED CODE 1521.05(B) AND AS DETAILED IN THE TECHNICAL GUIDANCE. COPIES OF THE WELL SEALING REPORTS AS SUBMITTED ARE TO BE PROVIDED TO THE CITY OF TROY, ODOT AND THE MIAMI COUNTY HEALTH DEPARTMENT.

690E65300 - ITEM SPECIAL - GROUND WATER MONITORING WELL ABANDONMENT 3 EACH

PROTECTION OF JOE REARDON SKATE PARK

THE CONTRACTOR MUST ENSURE THAT THE PROJECT DOES NOT RESTRICT ACCESS TO JOE REARDON SKATE PARK.

PROTECTION OF DRINKING WATER RESOURCES

PORTIONS OF THE PROJECT ARE WITHIN THE BOUNDARIES OF A DESIGNATED SOLE SOURCE AQUIFER AND DESIGNATED SOURCE WATER PROTECTION AREA FOR THE CITY OF TROY WELLFIELD. BEST CONSTRUCTION PRACTICES ARE TO BE IMPLEMENTED TO MINIMIZE WATER QUALITY IMPACTS. IDLE EQUIPMENT, PETROCHEMICALS, AND TOXIC/HAZARDOUS MATERIALS SHALL NOT BE STORED NEAR DRAINAGE WAYS, DITCHES, OR STREAMS. REFUELING SHALL NOT BE UNDERTAKEN NEAR DRAINAGE WAYS, DITCHES, OR STREAMS. A SPILL CONTAINMENT KIT IS TO BE MAINTAINED ON-SITE THROUGHOUT CONSTRUCTION ACTIVITIES. SPILLS OF FUEL, OILS, CHEMICALS, OR OTHER MATERIALS WHICH COULD POSE A THREAT TO GROUNDWATER SHALL BE CLEANED UP IMMEDIATELY. IF THE SPILL IS A REPORTABLE AMOUNT, THE FIRE DEPARTMENT (911), LOCAL EMERGENCY COORDINATER (937-339-6400) AND THE OEPA (1-800-282-9378) MUST BE CONTACTED WITHIN 30 MINUTES OF KNOWLEDGE OF THE RELEASE.

MINIMIZE DISTURBANCE

EXISTING PRIVATE LANDSCAPING ELEMENTS LABELLED AS "MINIMIZE DISTURBANCE" ARE INTENDED TO BE PRESERVED BY THE CONTRACTOR THROUGHOUT PROJECT CONSTRUCTION. IN THE EVENT THAT THE PROJECT WORK ENCROACHES ON THESE AREAS, THE CONTRACTOR IS RESPONSIBLE FOR REPLACING LANDSCAPING ELEMENTS IN KIND. THE CONTRACTOR IS RESPONSIBLE FOR COORDINATING WITH THE PROPERTY OWNER ON PLACEMENT OF THESE ITEMS.

ITEM 661, MULCH, SHALL CONFORM TO SECTION 661 OF THE ODOT CMS. ITEM 661, PLANTING, MISC.: LANDSCAPING SHRUB SHALL CONFORM TO THE ODOT CMS AND INCLUDE ALL LABOR, MATERIAL, AND EQUIPMENT TO REPLACE LANDSCAPING SHRUBS IN AFFECTED AREAS.

THE FOLLOWING QUANTITIES HAVE BEEN CARRIED TO THE GENERAL SUMMARY:

ITEM 661 - MULCH 17.4 CY
ITEM 661 - PLANTING, MISC.: LANDSCAPING SHRUB 34 EA

CALCULATED ATW
CHECKED JDH

GENERAL NOTES

MIA-41-09.49

S:\CIN\4300--4399\4354\004\Drawings\CAD\108662\roadway\sheets\08662GN005.dgn Sheet 2/2/2022 11:35:06 AM Allisonw

SHEET NO.	PHASE	614 WORK ZONE LANE LINE, CLASS I, 4", 642 PAINT	614 WORK ZONE CENTER LINE, CLASS I, 642 PAINT	614 WORK ZONE EDGE LINE, CLASS I, 4", 740.06, TYPE I	614 WORK ZONE CHANNELIZING LINE, CLASS I, 8", 642 PAINT	614 WORK ZONE DOTTED LINE, CLASS I, 4", 642 PAINT	614 WORK ZONE TRANSVERSE/DIAGONAL LINE, CLASS I, 642 PAINT	614 WORK ZONE STOP LINE, CLASS I, 642 PAINT	614 WORK ZONE CROSSWALK LINE, CLASS I, 642 PAINT	614 WORK ZONE ARROW, CLASS I, 642 PAINT	614 WORK ZONE RAILROAD SYMBOL MARKING, CLASS I, 642 PAINT
		MILE	MILE	MILE	FT	FT	FT	FT	FT	EACH	EACH
20	2	0.14	0.18	0.15	200			74	146	4	1
21	2	0.19	0.36	0.19	75			90	117	2	1
22	2	0.19	0.26	0.24	667			98	457	8	
23	2	0.19	0.19	0.19	660			124	549	12	
24	2	0.17	0.16	0.18	439			88	432	10	
26	3	0.22	0.37	0.23	281			35		4	
27	3	0.19	0.36	0.19	798			93		2	1
28	3	0.19	0.24	0.21	807			110		10	
29	3	0.10	0.17	0.21		200		140		9	
30	3			0.10						2	
PER TC PLANS	4 / 4A / 4B	1.22	0.82	0.26	2987			587	2014	46	
31A	4			0.05	181	296				3	
31B	4					321					
32	4A	0.05	0.09		267			156	607	6	
33	4A	0.01	0.25	0.03	578		289	102	609	12	
TOTALS CARRIED TO GENERAL SUMMARY		2.85	3.45	2	7940	817	289	1697	4931	130	3

CALCULATED LDW
CHECKED JWB

MAINTENANCE OF TRAFFIC SUBSUMMARY

MIA-41-09.49

L:\TroyOH\19060901-00_WestMainCorridorImprov\108662\Roadway\Sheets\108662MS001.dgn 1/26/2022 4:58:31 PM ghansel

ITEM 614, MAINTAINING TRAFFIC
A MINIMUM OF 1 LANE OF TRAFFIC IN EACH DIRECTION SHALL BE MAINTAINED AT ALL TIMES ON MAIN STREET BY USE OF THE EXISTING PAVEMENT, THE COMPLETED PAVEMENT, AND TEMPORARY SURFACES USING ITEMS 410 AND 614.

A MINIMUM OF ONE LANE OF TRAFFIC IN EACH DIRECTION SHALL BE MAINTAINED AT ALL TIMES ON SIDE STREETS, EXCEPT FOR A PERIOD NOT TO EXCEED 7 CONSECUTIVE CALENDAR DAYS, WHEN THROUGH TRAFFIC MAY BE DETOURED ON CEDAR STREET AS SHOWN ON SHEET 15. A DISINCENTIVE SHALL BE ASSESSED IN THE AMOUNT OF $ 250 PER DAY FOR EACH CALENDAR DAY THE ROADWAY REMAINS CLOSED TO TRAFFIC BEYOND THE SPECIFIED LIMIT.

LENGTH AND DURATION OF LANE CLOSURES AND RESTRICTIONS SHALL BE AT THE APPROVAL OF THE ENGINEER. IT IS THE INTENT TO MINIMIZE THE IMPACT TO THE TRAVELING PUBLIC. LANE CLOSURES OR RESTRICTIONS OVER SEGMENTS OF THE PROJECT IN WHICH NO WORK IS ANTICIPATED WITHIN A REASONABLE TIME FRAME, AS DETERMINED BY THE ENGINEER, SHALL NOT BE PERMITTED. THE LEVEL OF UTILIZATION OF MAINTENANCE OF TRAFFIC DEVICES SHALL BE COMMENSURATE WITH THE WORK IN PROGRESS.

NOTICE OF CLOSURE SIGNS (W20-H13) SHALL BE ERECTED BY THE CONTRACTOR PRIOR TO THE SCHEDULED ROAD CLOSURE OF SIDE ROADS IN ACCORDANCE WITH THE NOTICE OF CLOSURE TIME TABLE BELOW. AT THE APPROVAL OF THE ENGINEER, PORTABLE CHANGEABLE MESSAGE SIGNS MAY BE USED IN LIEU OF THE STANDARD FLATSHEET SIGN FOR CLOSURE DURATIONS OF LESS THAN 1 WEEK.

THE SIGN SHALL DISPLAY THE DATE OF THE CLOSURE IN MMM-DD FORMAT AND THE NUMBER OF DAYS OF THE CLOSURE. THE LAST LINE OF THE W20-H13 SIGN LISTS A PHONE NUMBER WHICH A MOTORIST MAY CALL FOR ADDITIONAL INFORMATION (937-339-9481).

NOTICE OF CLOSURE SIGN TIME TABLE

ITEM	DURATION OF CLOSURE	SIGN DISPLAYED TO PUBLIC
RAMP & ROAD CLOSURES	>= 2 WEEKS	14 CALENDAR DAYS PRIOR TO CLOSURE
	> 12 HOURS & < 2 WEEKS	7 CALENDAR DAYS PRIOR TO CLOSURE
	< 12 HOURS	2 BUSINESS DAYS PRIOR TO CLOSURE

THE SIGNS SHALL BE ERECTED ON THE RIGHT-HAND SIDE OF THE ROAD FACING TRAFFIC. THEY SHALL BE PLACED SO AS NOT TO INTERFERE WITH THE VISIBILITY OF ANY OTHER TRAFFIC CONTROL SIGNS. ON ROADWAYS, THEY SHOULD BE ERECTED AT OR NEAR THE POINT OF CLOSURE.

THE FOLLOWING ESTIMATED QUANTITIES HAVE BEEN INCLUDED IN THE GENERAL SUMMARY FOR USE AS DETERMINED BY THE ENGINEER FOR THE MAINTENANCE OF TRAFFIC.

ITEM 614, ASPHALT CONCRETE FOR MAINTAINING TRAFFIC 50 CU. YD.
ITEM 616, WATER 10 M. GAL.

ALL WORK AND TRAFFIC CONTROL DEVICES SHALL BE IN ACCORDANCE WITH C&MS 614 AND OTHER APPLICABLE PORTIONS OF THE SPECIFICATIONS, AS WELL AS THE OHIO MANUAL OF UNIFORM TRAFFIC CONTROL DEVICES. PAYMENT FOR ALL LABOR, EQUIPMENT AND MATERIALS SHALL BE INCLUDED IN THE LUMP SUM CONTRACT PRICE FOR ITEM 614, MAINTAINING TRAFFIC, UNLESS SEPARATELY ITEMIZED IN THE PLAN.

TRENCH FOR WIDENING
TRENCH EXCAVATION FOR BASE WIDENING SHALL BE ONLY ON ONE SIDE OF THE PAVEMENT AT A TIME. THE OPEN TRENCH SHALL BE ADEQUATELY MAINTAINED AND PROTECTED WITH DRUMS OR BARRICADES AT ALL TIMES. PLACEMENT OF PROPOSED SUBBASE AND BASE MATERIAL SHALL FOLLOW AS CLOSELY AS POSSIBLE BEHIND EXCAVATION OPERATIONS. THE LENGTH OF WIDENING TRENCH WHICH IS OPEN AT ANY ONE TIME SHALL BE HELD TO A MINIMUM AND SHALL AT ALL TIMES BE SUBJECT TO APPROVAL OF THE ENGINEER.

OVERNIGHT TRENCH CLOSING
THE BASE WIDENING SHALL BE COMPLETED TO A DEPTH OF NO MORE THAN 12 INCHES BELOW THE EXISTING PAVEMENT BY THE END OF EACH WORK DAY. NO TRENCH SHALL BE LEFT OPEN OVERNIGHT EXCEPT FOR A SHORT LENGTH (25 FEET OR LESS) OF A WORK SECTION AT THE END OF THE TRENCH. IN CASE WORK MUST BE SUSPENDED BECAUSE OF INCLEMENT WEATHER OR OTHER REASONS, THE TRENCH FOR THE UNCOMPLETED BASE WIDENING SHALL BE BACKFILLED AT THE DIRECTION OF THE ENGINEER.

DUST CONTROL
THE CONTRACTOR SHALL FURNISH AND APPLY WATER FOR DUST CONTROL AS DIRECTED BY THE ENGINEER. THE FOLLOWING ESTIMATED QUANTITIES HAVE BEEN INCLUDED FOR DUST CONTROL PURPOSES:

ITEM 616, WATER 20 M. GAL.

WORK ZONE MARKINGS AND SIGNS
THE FOLLOWING ESTIMATED QUANTITIES HAVE BEEN CARRIED TO THE GENERAL SUMMARY FOR USE AT LOCATIONS IDENTIFIED BY THE ENGINEER FOR WORK ZONE PAVEMENT MARKINGS AND SIGNS PER THE REQUIREMENTS OF C&MS 614.04 AND 614.11.

ITEM 614, WORK ZONE LANE LINE, CLASS III, 4", 642 PAINT 1.0 MILE
ITEM 614, WORK ZONE CENTER LINE, CLASS III, 642 PAINT 1.1 MILE
ITEM 614, WORK ZONE EDGE LINE, CLASS III, 4", 642 PAINT 0.3 MILE
ITEM 614, WORK ZONE CHANNELIZING LINE, CLASS III, 8", 642 PAINT 3570 FT
ITEM 614, WORK ZONE DOTTED LINE, CLASS III, 4", 642 PAINT 575 FT
ITEM 614, WORK ZONE TRANSVERSE/DIAGONAL LINE, CLASS III, 642 PAINT 225 FT
ITEM 614, WORK ZONE STOP LINE, CLASS III, 642 PAINT 675 FT
ITEM 614, WORK ZONE CROSSWALK LINE, CLASS III, 642 PAINT 3025 FT
ITEM 614, WORK ZONE ARROW, CLASS III, 642 PAINT 62 EACH
ITEM 614, WORK ZONE RAILROAD SYMBOL MARKING, CLASS III, 642 PAINT 4 EACH
ITEM 614, WORK ZONE PAVEMENT MARKING, MISC.: PARKING LOT STALL MARKING, CLASS I, 642 PAINT 2150 FT

FLOODLIGHTING
FLOODLIGHTING OF THE WORK SITE FOR OPERATIONS CONDUCTED DURING NIGHTTIME PERIODS SHALL BE ACCOMPLISHED SO THAT THE LIGHTS DO NOT CAUSE GLARE TO THE DRIVERS ON THE ROADWAY. TO ENSURE THE ADEQUACY OF THE FLOODLIGHT PLACEMENT, THE CONTRACTOR AND THE ENGINEER SHALL DRIVE THROUGH THE WORK SITE EACH NIGHT WHEN THE LIGHTING IS IN PLACE AND OPERATIVE PRIOR TO COMMENCING ANY WORK. IF GLARE IS DETECTED, THE LIGHT PLACEMENT AND SHIELDING SHALL BE ADJUSTED TO THE SATISFACTION OF THE ENGINEER BEFORE WORK PROCEEDS.

PAYMENT FOR ALL LABOR, EQUIPMENT AND MATERIALS SHALL BE INCLUDED IN THE LUMP SUM CONTRACT PRICE FOR ITEM 614, MAINTAINING TRAFFIC.

MAINTENANCE OF PROPERTY ACCESS
ACCESS TO ALL PROPERTIES WITHIN THE PROJECT LIMITS MUST BE MAINTAINED AT ALL TIMES. IF CERTAIN CONSTRUCTION ACTIVITIES REQUIRE A DRIVEWAY CLOSURE (I.E. CONCRETE CURING), THE CONTRACTOR SHALL PROVIDE ALTERNATE ACCESS TO THE IMPACTED PROPERTY. THE ALTERNATE ACCESS MUST MAINTAIN A MINIMUM 10-FOOT CLEAR WIDTH, A MAXIMUM GRADE OF 10 PERCENT, AND A SURFACE OF COMPACTED ITEM 304 OR BETTER. IT IS THE INTENT TO MINIMIZE THE IMPACT TO PROPERTY OWNERS, SO THE DURATION OF A GIVEN DRIVEWAY CLOSURE SHALL BE LIMITED TO THE TIME WHEN WORK IS ACTIVELY BEING PERFORMED ON THE DRIVEWAY. THE CONTRACTOR SHALL NOTIFY THE ENGINEER OF A PROPOSED DRIVEWAY CLOSURE AND PROVIDE AN ALTERNATE ACCESS PLAN TO THE ENGINEER FOR APPROVAL A MINIMUM OF SEVEN CALENDAR DAYS BEFORE CLOSING THE DRIVEWAY. THE CONTRACTOR WILL NOT BE PERMITTED TO CLOSE PROPERTY ACCESS WITHOUT APPROVAL FROM THE ENGINEER. IN ADDITION, THE CONTRACTOR MUST MAINTAIN DRIVEWAY ACCESS AS NOTED BELOW:

- PROJECT PARCEL 6: TWO ACCESS POINTS TO W. MAIN ST SHALL BE MAINTAINED AT ALL TIMES THROUGH THE EXISTING, TEMPORARY, OR NEW PERMANENT DRIVEWAYS.

- PROJECT PARCEL 11: PERMANENT DRIVEWAY SHALL BE REOPENED WITHIN TWO CALENDAR DAYS (WILL REQUIRE CLASS QC MS CONCRETE)

- PROJECT PARCEL 26, 937 WEST MAIN STREET: ACCESS TO WEST MAIN STREET MUST BE PROVIDED BETWEEN 10:30 AM THURSDAY AND 12:00 AM (MIDNIGHT) SUNDAY EACH WEEK. ADDITIONALLY, ACCESS FOR DELIVERIES WILL NEED TO BE ACCOMMODATED THROUGH COORDINATION WITH THE ENGINEER.

- PROJECT PARCEL 38, 750 WEST MAIN STREET: AT LEAST ONE BAY WITH PULL THROUGH ACCESS TO WEST MAIN STREET MUST BE OPEN AT ALL TIMES.

- PROJECT PARCEL 41: PERMANENT DRIVEWAY SHALL BE REOPENED WITHIN TWO CALENDAR DAYS (WILL REQUIRE CLASS QC MS CONCRETE)

THE COST FOR ALL LABOR, EQUIPMENT, AND MATERIALS REQUIRED TO MAINTAIN PROPERTY ACCESS AS DESCRIBED IN THIS NOTE SHALL BE INCLUDED IN THE LUMP SUM BID FOR ITEM 614, MAINTAINING TRAFFIC UNLESS ITEMIZED SEPARATELY IN THE PLANS.

ITEM 614, BUSINESS ENTRANCE (M4-H15) SIGN, AS PER PLAN
THE BUSINESS ENTRANCE (M4-H15) SIGN SHOULD BE PROVIDED AT EACH TEMPORARILY RELOCATED COMMERCIAL DRIVEWAY FOR WHICH THE RELOCATION IS NOT OBVIOUS TO THE MOTORIST. THE PROJECT ENGINEER SHALL DETERMINE WHETHER OR NOT THE DRIVEWAY RELOCATION IS, OR IS NOT, OBVIOUS AND WHETHER OR NOT A SIGN SHOULD BE PROVIDED. ONLY ONE SIGN PER BUSINESS SHALL BE PERMITTED UNLESS OTHERWISE NOTED. THE SIGN SHALL BE 36 INCH X 48 INCH IN SIZE WITH TYPE G OR TYPE H ORANGE RETROREFLECTIVE SHEETING. THE SIGN LEGEND SHALL BE PLACED ON BOTH SIDES OF THE SIGN (BACK TO BACK). THE SIGN SHALL HAVE THE STANDARD M4-H15 LEGEND WITH THE WORD "BUSINESS" ON THE TOP LINE, EXCEPT UNDER UNUSUAL CIRCUMSTANCES WHERE IT MAY NOT BE INTUITIVE THAT A DRIVEWAY SERVES A SPECIFIC BUSINESS. IN SUCH UNUSUAL CASES, THE ACTUAL BUSINESS NAME MAY BE SUBSTITUTED FOR THE WORD "BUSINESS".

THE SIGN SHALL BE MOUNTED ON TWO #3 POSTS OR ON TEMPORARY POSTS IN ACCORDANCE WITH SCD MT-105.10 AND IN ACCORDANCE WITH THE OHIO MANUAL OF UNIFORM TRAFFIC CONTROL DEVICES, LATEST EDITION. THE SIGN SHALL BE CLEARLY VISIBLE AND SHALL CLEARLY IDENTIFY THE LOCATION OF THE DRIVEWAY. THE SIGN SHOULD BE POSITIONED AT 90° TO THE DIRECTION(S) OF TRAFFIC. THE SIGN MAY NEED TO BE MOVED FOR EACH PHASE OF THE MAINTENANCE OF TRAFFIC OPERATIONS.

PAYMENT FOR ALL COSTS ASSOCIATED WITH MANUFACTURING, MOUNTING, RELOCATING, AND REMOVING THE SIGN, INCLUDING ALL LABOR, MATERIALS AND EQUIPMENT SHALL BE INCLUDED IN THE CONTRACT PRICE PER EACH FOR ITEM 614-BUSINESS ENTRANCE SIGN.

THE FOLLOWING ESTIMATED QUANTITY HAS BEEN CARRIED TO THE GENERAL SUMMARY FOR THIS ITEM.

ITEM 614, BUSINESS ENTRANCE SIGN 5 EACH

ITEM 614, LAW ENFORCEMENT OFFICER (WITH PATROL CAR) FOR ASSISTANCE DURING CONSTRUCTION OPERATIONS
USE OF LAW ENFORCEMENT OFFICERS (LEOS) BY CONTRACTORS OTHER THAN THE USES SPECIFIED BELOW WILL NOT BE PERMITTED AT PROJECT COST. LEOS SHOULD NOT BE USED WHERE THE OMUTCD INTENDS THAT FLAGGERS BE USED.

IN ADDITION TO THE REQUIREMENTS OF C&MS 614 AND THE OMUTCD, A UNIFORMED LEO WITH AN OFFICIAL PATROL CAR (CAR WITH TOP-MOUNTED EMERGENCY FLASHING LIGHTS AND COMPLETE MARKINGS OF THE APPROPRIATE LAW ENFORCEMENT AGENCY) SHALL BE PROVIDED FOR THE FOLLOWING TRAFFIC CONTROL TASKS:

- DURING THE ENTIRE ADVANCE PREPARATION AND CLOSURE SEQUENCE WHERE COMPLETE BLOCKAGE OF TRAFFIC IS REQUIRED.

- DURING A TRAFFIC SIGNAL INSTALLATION WHEN IMPACTING THE NORMAL FUNCTION OF THE SIGNAL OR THE FLOW OF TRAFFIC, OR WHEN TRAFFIC NEEDS TO BE DIRECTED THROUGH AN ENERGIZED TRAFFIC SIGNAL CONTRARY TO THE SIGNAL DISPLAY (E.G., DIRECTING MOTORISTS THROUGH A RED LIGHT).

IN ADDITION TO THE REQUIREMENT OF C&MS 614 AND THE OMUTCD, A UNIFORMED LEO WITH AN OFFICIAL PATROL CAR (CAR WITH TOP-MOUNTED EMERGENCY FLASHING LIGHTS AND COMPLETE MARKINGS OF THE APPROPRIATE LAW ENFORCEMENT AGENCY) SHOULD BE PROVIDED FOR THE FOLLOWING TRAFFIC CONTROL TASKS AS APPROVED BY THE ENGINEER:

- FOR LANE CLOSURES: DURING INITIAL SET-UP PERIODS, TEAR DOWN PERIODS, SUBSTANTIAL SHIFTS OF A CLOSURE POINT OR WHEN NEW LANE CLOSURE ARRANGEMENTS ARE INITIATED FOR LONG-TERM LANE CLOSURES/SHIFTS (FOR THE FIRST AND LAST DAY OF MAJOR CHANGES IN TRAFFIC CONTROL SETUP).

- FOR OPERATIONS WITHOUT POSITIVE PROTECTION OCCURRING WITHIN 10 FEET OF AN OPEN TRAVELED LANE THAT MEET ALL OF THE FOLLOWING CRITERIA:
+ ON A MULTI-LANE DIVIDED INTERSTATE, OTHER FREEWAY OR EXPRESSWAY; AND
+ AN AUTHORIZED SPEED LIMIT OF 45 MPH OR GREATER THAT IS IN EFFECT AT THE TIME OF THE OPERATION; AND,
+ AADT OF 50,000 (OR AADT OF 30,000 WITH 25% OR HIGHER PERCENT TRUCKS)

"WITHOUT POSITIVE PROTECTION" MEANS USE OF DRUMS, CONES, SHADOW VEHICLE, ETC, WITHOUT PROTECTION FROM PORTABLE BARRIER OR OTHER RIGID BARRIER ALONG THE WORK AREA. THIS PHRASE DOES NOT APPLY TO CASES WHERE POSITIVE PROTECTION IS REQUIRED. MOBILE OPERATIONS ARE REGARDED AS "WITHOUT POSITIVE PROTECTION". FOR WORK ZONES USING A COMBINATION OF BARRIER AND TEMPORARY TRAFFIC CONTROL DEVICES (CONES, DRUMS, ETC), THE DESIGNATION SHALL BE BASED UPON THE TYPE OF DEVICES USED IN THE AREA THAT WORKERS ARE LOCATED.

IF MULTIPLE ACTIVE LOCALIZED QUALIFYING WORK AREAS OCCUR WITHOUT POSITIVE PROTECTION, PER MAINLINE TRAFFIC DIRECTION, PROVIDE A UNIFORMED LEO AND OFFICIAL PATROL CAR IN ADVANCE OF:

- THE FIRST ACTIVE WORK AREA THAT DRIVERS WILL ENCOUNTER; OR
- THE ACTIVE WORK AREA LATERALLY CLOSEST TO THE OPEN TRAVELED LANE; OR
- OTHER LOCATION AS APPROVED BY THE ENGINEER.

THE UNIFORMED LEO AND OFFICIAL PATROL CAR MAY RELOCATE AMONG THE LISTED LOCATIONS AS APPROPRIATE AS THE OPERATIONS PROCEED IN THE LOCALIZED QUALIFYING WORK AREAS.

IN GENERAL, LEOS SHOULD BE POSITIONED IN ADVANCE OF AND ON THE SAME SIDE AS THE LANE RESTRICTION (OR AT THE POINT OF ROAD CLOSURE), AND TO MANUALLY CONTROL TRAFFIC MOVEMENTS THROUGH SIGNALIZED INTERSECTIONS IN WORK ZONES.

LEOS SHOULD NOT FORGO THEIR TRAFFIC CONTROL RESPONSIBILITIES TO APPREHEND MOTORISTS FOR ROUTINE TRAFFIC VIOLATIONS. HOWEVER, IF A MOTORIST'S ACTIONS ARE CONSIDERED TO BE RECKLESS, THEN PURSUIT OF THE MOTORIST IS APPROPRIATE.

THE LEOS WORK AT THE DIRECTION OF THE CONTRACTOR. THE CONTRACTOR IS RESPONSIBLE FOR SECURING THE SERVICES OF THE LEOS WITH THE APPROPRIATE AGENCIES AND COMMUNICATING THE INTENTIONS OF THE PLANS WITH RESPECT TO DUTIES OF THE LEOS. THE ENGINEER SHALL HAVE FINAL CONTROL OVER THE LEOS' DUTIES AND PLACEMENT, AND WILL RESOLVE ANY ISSUES THAT MAY ARISE BETWEEN THE TWO PARTIES.

ENSURE PROVIDED LEOS HAVE BEEN TRAINED APPROPRIATE TO THE JOB DECISIONS THEY ARE REQUIRED TO MAKE WHILE ON THE PROJECT, IN ACCORDANCE WITH C&MS 614.03.

THE LEO SHALL REPORT IN TO THE CONTRACTOR PRIOR TO THE START OF THE SHIFT, IN ORDER TO RECEIVE INSTRUCTIONS REGARDING SPECIFIC WORK ASSIGNMENTS DURING HIS/HER SHIFT. THE LEO IS EXPECTED TO STAY AT THE PROJECT SITE FOR THE ENTIRE DURATION OF HIS/HER SHIFT. THE LEO SHALL REPORT TO THE CONTRACTOR AT THE END OF HIS/HER SHIFT. SHOULD IT BE NECESSARY TO LEAVE THE PROJECT SITE, THE LEO SHALL NOTIFY THE ENGINEER. THE CONTRACTOR SHALL PROVIDE THE LEO WITH A TWO-WAY COMMUNICATION DEVICE THAT SHALL BE RETURNED TO THE CONTRACTOR AT THE END OF HIS/HER SHIFT.

LEOS (WITH PATROL CAR) REQUIRED BY THE TRAFFIC MAINTENANCE TASKS ABOVE SHALL BE PAID FOR ON A UNIT PRICE (HOURLY) BASIS UNDER ITEM 614, LAW ENFORCEMENT OFFICER (WITH PATROL CAR) FOR ASSISTANCE. THE FOLLOWING ESTIMATED QUANTITIES HAVE BEEN CARRIED TO THE GENERAL SUMMARY.

ITEM 614, LAW ENFORCEMENT OFFICER WITH PATROL CAR FOR ASSISTANCE 84 HOURS

THE HOURS PAID SHALL INCLUDE ANY MINIMUM SHOW-UP TIME REQUIRED BY THE LAW ENFORCEMENT AGENCY INVOLVED.

[CONTINUED NEXT SHEET]

L:\TroyOH\19060901-00_WestMainCorridorImprov\108662\Roadway\Sheets\108662MN001.dgn 1/31/2022 1:55:48 PM jbarbour

ITEM 614, LAW ENFORCEMENT OFFICER (WITH PATROL CAR) FOR ASSISTANCE DURING CONSTRUCTION OPERATIONS [CONTINUED]
ANY ADDITIONAL COSTS (ADMINISTRATIVE OR OTHERWISE) INCURRED BY THE CONTRACTOR TO OBTAIN THE SERVICES OF A LEO ARE INCLUDED WITH THE BID UNIT PRICE FOR ITEM 614, LAW ENFORCEMENT OFFICER WITH PATROL CAR FOR ASSISTANCE.

NOTIFICATION OF TRAFFIC RESTRICTIONS

THROUGHOUT THE DURATION OF THE PROJECT, THE CONTRACTOR SHALL NOTIFY THE PROJECT ENGINEER IN WRITING OF ALL TRAFFIC RESTRICTIONS AND UPCOMING MAINTENANCE OF TRAFFIC CHANGES. THE CONTRACTOR SHALL ENSURE THE WRITTEN NOTIFICATION IS SUBMITTED IN A TIMELY MANNER TO ALLOW THE PROJECT ENGINEER TO MEET THE REQUIRED TIME FRAMES SET FORTH IN THE TABLE BELOW TO INFORM THE SPECIAL HAULING PERMITS SECTION (HAULING.PERMITS@DOT.OHIO.GOV) AND THE DISTRICT PUBLIC INFORMATION OFFICE (PIO). THIS NOTIFICATION SHALL BE RECEIVED BY THE PROJECT ENGINEER PRIOR TO THE PHYSICAL SETUP OF ANY APPLICABLE SIGNS OR MESSAGE BOARDS.

INFORMATION SHOULD INCLUDE, BUT IS NOT LIMITED TO, ALL CONSTRUCTION ACTIVITIES THAT IMPACT OR INTERFERE WITH TRAFFIC AND SHALL LIST THE SPECIFIC LOCATION, TYPE OF WORK, ROAD STATUS, DATE AND TIME OF RESTRICTION, DURATION OF RESTRICTION, NUMBER OF LANES MAINTAINED, NUMBER OF LANES CLOSED, MINIMUM VERTICAL CLEARANCE, MINIMUM WIDTH OF DRIVABLE PAVEMENT, DETOUR ROUTES, IF APPLICABLE, AND ANY OTHER INFORMATION REQUESTED BY THE PROJECT ENGINEER.

NOTIFICATION TIME TABLE

ITEM	DURATION OF CLOSURE	NOTICE DUE TO PERMITS & PIO
RAMP & ROAD CLOSURES	>= 2 WEEKS	21 CALENDAR DAYS PRIOR TO CLOSURE
	> 12 HRS & < 2 WEEKS	14 CALENDAR DAYS PRIOR TO CLOSURE
	< 12 HOURS	4 BUSINESS DAYS PRIOR TO CLOSURE
LANE CLOSURES & RESTRICTIONS	>= 2 WEEKS	14 CALENDAR DAYS PRIOR TO CLOSURE
	< 2 WEEKS	5 BUSINESS DAYS PRIOR TO CLOSURE
START OF CONSTRUCTION & TRAFFIC PATTERN CHANGES	N/A	14 CALENDAR DAYS PRIOR TO IMPLEMENTATION

ANY UNFORESEEN CONDITIONS NOT SPECIFIED IN THE PLANS REQUIRING TRAFFIC RESTRICTIONS SHALL ALSO BE REPORTED TO THE PROJECT ENGINEER USING THE NOTIFICATION TIME TABLE.

SEQUENCE OF CONSTRUCTION
PRE-PHASE (NOT SHOWN): CONSTRUCT TEMPORARY SIGNAL POLES FOR MAINTAINING TRAFFIC SIGNALS AT RIDGE, ELM AND ADAMS AND ATTACH SIGNALS TO THE TEMPORARY POLES. CLOSE CEDAR STREET TO THROUGH TRAFFIC. CONSTRUCT SANITARY SEWER THROUGH THE CEDAR/MAIN INTERSECTION AT NIGHT. MAINTAIN A MINIMUM OF ONE LANE OF TRAFFIC IN EACH DIRECTION ON MAIN STREET UTILIZING LANE CLOSURES (MT-95.31, MT-95.32, MT-95.60) AND FLAGGERS AS NECESSARY. COMPLETE REMAINDER OF CEDAR STREET AND MAIN STREET SANITARY SEWER DURING NORMAL WORKING HOURS. ON MAIN STREET, THE CONTRACTOR MAY CLOSE THE TWO-WAY LEFT TURN LANE AND ONE WESTBOUND THRU LANE WITH DRUMS WHILE ACTIVELY WORKING. BACKFILL TRENCH AND REMOVE DRUMS AT THE END OF EACH WORK DAY. A SHORT SECTION AT THE END OF THE TRENCH MAY BE COVERED WITH A STEEL PLATE AT THE APPROVAL OF THE ENGINEER. REMOVE CEDAR STREET DETOUR UPON COMPLETION OF SANITARY SEWER WORK.

PHASE 1A: CLOSE WESTBOUND CURB LANE EAST OF CEDAR STREET WITH DRUMS. SHIFT WESTBOUND INSIDE LANE ONTO THE TWO-WAY LEFT-TURN LANE USING DRUMS. CONSTRUCT STORM SEWER FROM STA 490+25 (+/-) TO STA 497+00 (+/-). CLOSE ONLY THE LENGTH OF LANE NEEDED TO COMPLETE THE WORK EACH DAY. ADJUST THE LIMITS OF THE LANE CLOSURES AS NECESSARY IN ACCORDANCE WITH THE STANDARD DRAWINGS. REMOVE DRUMS AT THE END OF EACH WORKDAY.

PHASE 1B: CLOSE WESTBOUND INSIDE LANE BEGINNING AT STA 496+25 WITH DRUMS. CLOSE TWO-WAY LEFT-TURN LANE FROM TAMPLIN DRIVE TO MADISON STREET WITH DRUMS. CONSTRUCT STORM SEWER FROM STA 481+50 (+/-) TO STA 490+25 (+/-). CLOSE ONLY THE LENGTH OF LANE NEEDED TO COMPLETE THE WORK EACH DAY. ADJUST THE LIMITS OF THE LANE CLOSURES AS NECESSARY IN ACCORDANCE WITH THE STANDARD DRAWINGS. REMOVE DRUMS AT THE END OF EACH WORKDAY.

PHASE 2: MILL ASPHALT WITHIN THE PAVEMENT PLANING LIMITS. PLACE TEMPORARY PAVEMENT MARKINGS AND SIGNAGE PER PHASE 2 MOT PLANS. COVER OR REMOVE ALL CONFLICTING PAVEMENT MARKINGS AND/OR SIGNAGE. PROVIDE ONE WESTBOUND LANE, TWO EASTBOUND LANES AND ONE TWO-WAY-LEFT-TURN LANE. ADJUST SIGNAL HEADS AS NEEDED TO ACCOMMODATE REVISED LANE LOCATIONS. WHERE ALTERNATE DRIVEWAY ACCESS IS SPECIFIED (I.E. PROVIDED VIA A SIDE STREET), INSTALL BUSINESS ENTRANCE SIGNAGE IN ADVANCE OF TEMPORARY DRIVEWAY CLOSURES. MAINTAIN DRIVEWAY ACCESS WHERE SHOWN USING EXISTING PAVEMENT AND TRAFFIC COMPACTED SURFACE. PROVIDE PEDESTRIAN DETOURS PER SCD MT-110.10. SIDEWALK WORK SHALL BE STAGED SO THAT ONLY ONE BLOCK IS UNDER CONSTRUCTION AT ANY GIVEN TIME. CONSTRUCT BASE WIDENING, CURB, DRAINAGE STRUCTURES, DRIVEWAYS, SIDEWALK, AND CONCRETE PAVEMENT BASE ON THE NORTH SIDE OF THE ROAD. RESTORE FULL DRIVEWAY ACCESS ON THE NORTH SIDE OF MAIN STREET, REMOVE PCB/BARRELS AND REMOVE BUSINESS ENTRANCE SIGNAGE.

PHASE 3: PLACE TEMPORARY PAVEMENT MARKINGS AND SIGNAGE PER PHASE 3 MOT PLANS. COVER OR REMOVE ALL CONFLICTING PAVEMENT MARKINGS AND/OR SIGNAGE. PROVIDE ONE WESTBOUND LANE, TWO EASTBOUND LANES AND ONE TWO-WAY-LEFT-TURN LANE. ADJUST SIGNAL HEADS AS NEEDED TO ACCOMMODATE REVISED LANE LOCATIONS. WHERE ALTERNATE DRIVEWAY ACCESS IS SPECIFIED (I.E. PROVIDED VIA A SIDE STREET), INSTALL BUSINESS ENTRANCE SIGNAGE IN ADVANCE OF TEMPORARY DRIVEWAY CLOSURES. MAINTAIN DRIVEWAY ACCESS WHERE SHOWN USING EXISTING PAVEMENT AND TRAFFIC COMPACTED SURFACE. PROVIDE PEDESTRIAN DETOURS PER SCD MT-110.10. SIDEWALK WORK SHALL BE STAGED SO THAT ONLY ONE BLOCK IS UNDER CONSTRUCTION AT ANY GIVEN TIME. CONSTRUCT BASE WIDENING, CURB, DRAINAGE STRUCTURES, DRIVEWAYS, SIDEWALK AND CONCRETE PAVEMENT BASE ON THE SOUTH SIDE OF THE ROAD. RESTORE FULL DRIVEWAY ACCESS ON THE SOUTH SIDE OF MAIN STREET, REMOVE PCB/BARRELS AND REMOVE BUSINESS ENTRANCE SIGNAGE.

PHASE 4: CONSTRUCTION OF THIS PHASE MAY BEGIN UPON REMOVAL OF THE EXISTING TRANSMISSION UTILITY POLE AT THE NORTHWEST CORNER OF MAIN STREET AND RIDGE AVENUE (BY AES). CLOSE SOUTHBOUND RIGHT TURN LANE ON RIDGE AVENUE WITH DRUMS. PLACE TEMPORARY PAVEMENT MARKINGS PER THE MAINTENANCE OF TRAFFIC PLANS. PLACE TEMPORARY MARKINGS FROM MADISON STREET TO MONROE STREET PER THE TRAFFIC CONTROL PLANS. CONSTRUCT IMPROVEMENTS AT THE NORTHWEST CORNER OF MAIN STREET AND RIDGE AVENUE. CONTRACTOR TO STAGE CONSTRUCTION FROM THE SIDE STREET TO LIMIT DISRUPTION TO WEST MAIN STREET TRAFFIC. PHASE 4A AND/OR PHASE 4B MAY BE PERFORMED CONCURRENTLY WITH PHASE 4.

PHASE 4A: PLACE TEMPORARY PAVEMENT MARKINGS WEST OF MONROE STREET AND EAST OF CHERRY STREET PER THE TRAFFIC CONTROL PLANS. PLACE TEMPORARY MARKINGS BETWEEN MONROE STREET AND CHERRY STREET PER THE MAINTENANCE OF TRAFFIC PLANS. SHIFT EASTBOUND TRAFFIC USING DRUMS AS NEEDED TO CONSTRUCT THE CURB BUMP OUTS AT OXFORD STREET, SHORT STREET AND PLUM STREET. CONTRACTOR TO STAGE CONSTRUCTION FROM THE SIDE STREETS TO LIMIT DISRUPTION TO WEST MAIN STREET TRAFFIC. POST DETOUR SIGNAGE FOR SIDE STREETS AS NEEDED PER OMUTCD TYPICAL APPLICATION 19 & 20. ONLY ONE INTERSECTION MAY BE CLOSED/RESTRICTED AT A TIME. CLOSE ONLY THE LENGTH OF LANE NEEDED TO COMPLETE THE WORK EACH DAY. ADJUST THE LIMITS OF THE LANE CLOSURES AS NECESSARY IN ACCORDANCE WITH THE STANDARD DRAWINGS. POST BUSINESS ENTRANCE SIGNAGE TO DIRECT MOTORISTS / PEDESTRIANS TO BUSINESSES AFFECTED BY THE WORK.

PHASE 4B: ALL MARKINGS PLACED IN PHASE 4A TO REMAIN FOR PHASE 4B. SHIFT WESTBOUND TRAFFIC USING DRUMS AS NEEDED TO CONSTRUCT THE CURB BUMP OUTS AT MONROE STREET, SHORT STREET AND PLUM STREET. CLOSE ONLY THE LENGTH OF LANE NEEDED TO COMPLETE THE WORK EACH DAY. ADJUST THE LIMITS OF THE LANE CLOSURES AS NECESSARY IN ACCORDANCE WITH THE STANDARD DRAWINGS.

PHASE 5 (NOT SHOWN): CONSTRUCT CONCRETE MEDIAN. PLACE ASPHALT INTERMEDIATE COURSE, ASPHALT SURFACE COURSE AND PERMANENT PAVEMENT MARKINGS. MAINTAIN TRAFFIC PER SCDS MT-95.31, MT-95.32, MT-99.20 AND/OR FLAGGERS. INSTALL PERMANENT SIGNAGE. ACTIVATE NEW SIGNALS PER MT-120.00. REMOVE ALL TEMPORARY SIGNAL POLES, MOT SIGNAGE AND UNCOVER ALL SIGNS TO REMAIN.

CALCULATED LDW
CHECKED JWB

MAINTENANCE OF TRAFFIC NOTES

MIA-41-09.49

L:\TroyOH\19060901-00_WestMainCorridorImprov\108662\Roadway\Sheets\108662MN001.dgn 1/31/2022 1:55:49 PM jbarbour

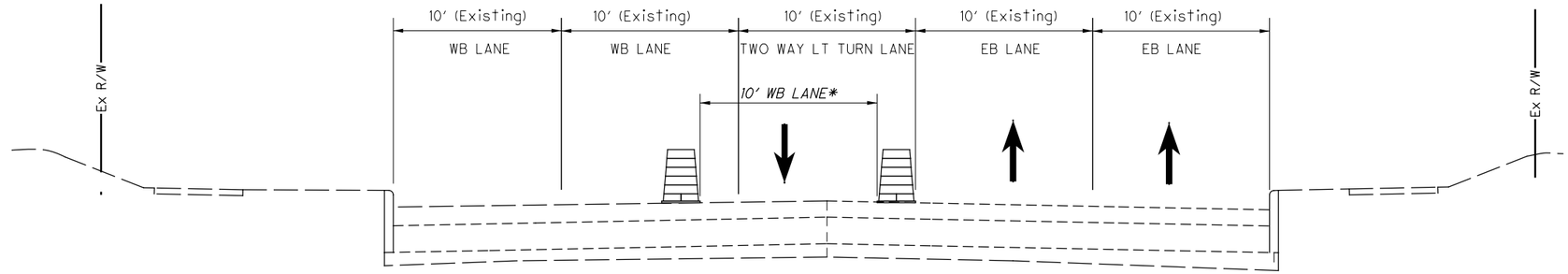

CONSTRUCT STORM SEWER
PHASE 1A

*DURING WORKING HOURS, CONVERT TWO WAY LEFT TURN LANE TO WESTBOUND THROUGH LANE USING DRUMS. RETURN TO NORMAL OPERATION DURING NON-WORKING HOURS.

MAINTAINENCE OF TRAFFIC TYPICAL SECTION PHASE 1A

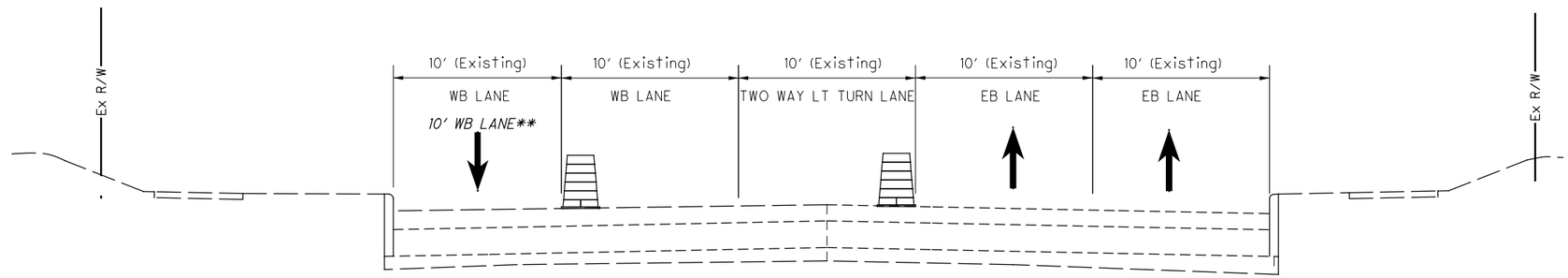

CONSTRUCT STORM SEWER
PHASE 1B

**DURING WORKING HOURS, CLOSE TWO WAY LEFT TURN LANE AND INSIDE WESTBOUND THROUGH LANE USING DRUMS. MAINTAIN WESTBOUND TRAFFIC IN OUTSIDE LANE. RETURN TO NORMAL OPERATION DURING NON-WORKING HOURS.

MAINTAINENCE OF TRAFFIC TYPICAL SECTION PHASE 1B

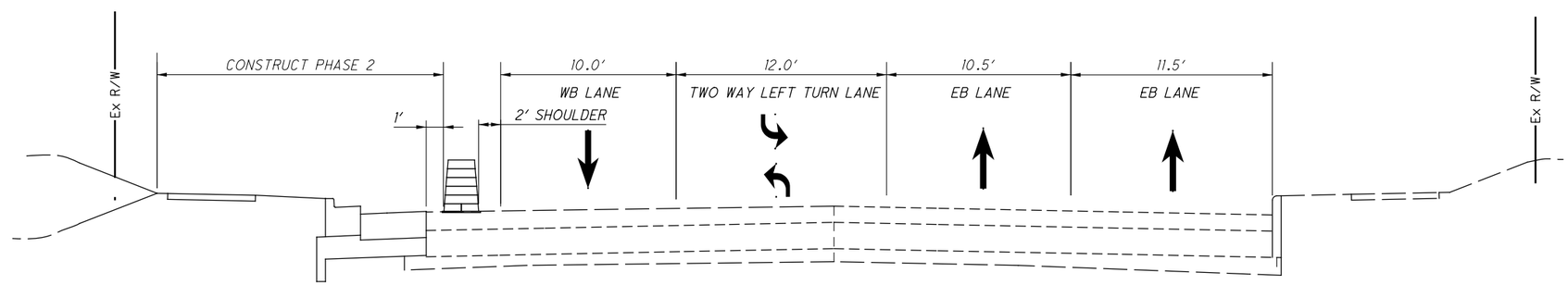

MAINTAINENCE OF TRAFFIC TYPICAL SECTION PHASE 2

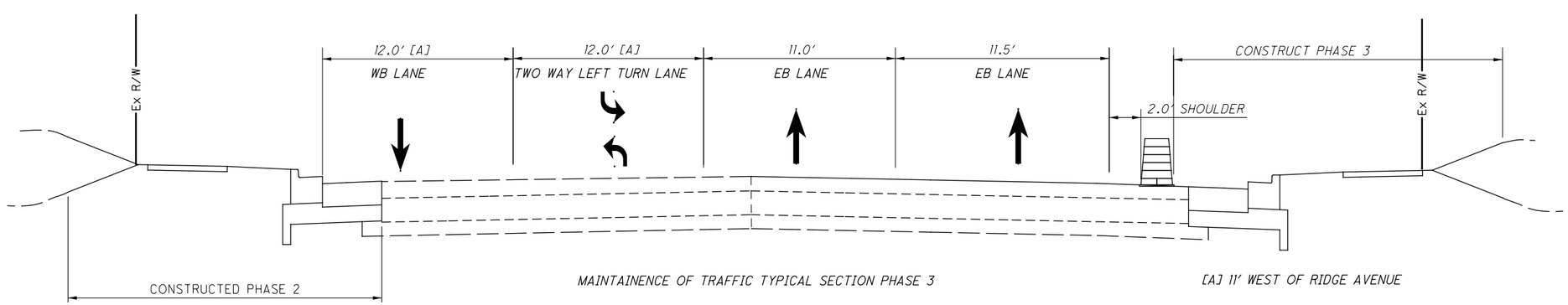

MAINTAINENCE OF TRAFFIC TYPICAL SECTION PHASE 3

[A] 11' WEST OF RIDGE AVENUE

CALCULATED LDW
CHECKED JWB

MAINTENANCE OF TRAFFIC TYPICAL SECTIONS

MIA-41-09.49

L:\TroyOH\19060901-00_WestMainCorridorImprov\108662\Roadway\Sheets\108662MY001.dgn 1/26/2022 4:58:51 PM ghansel

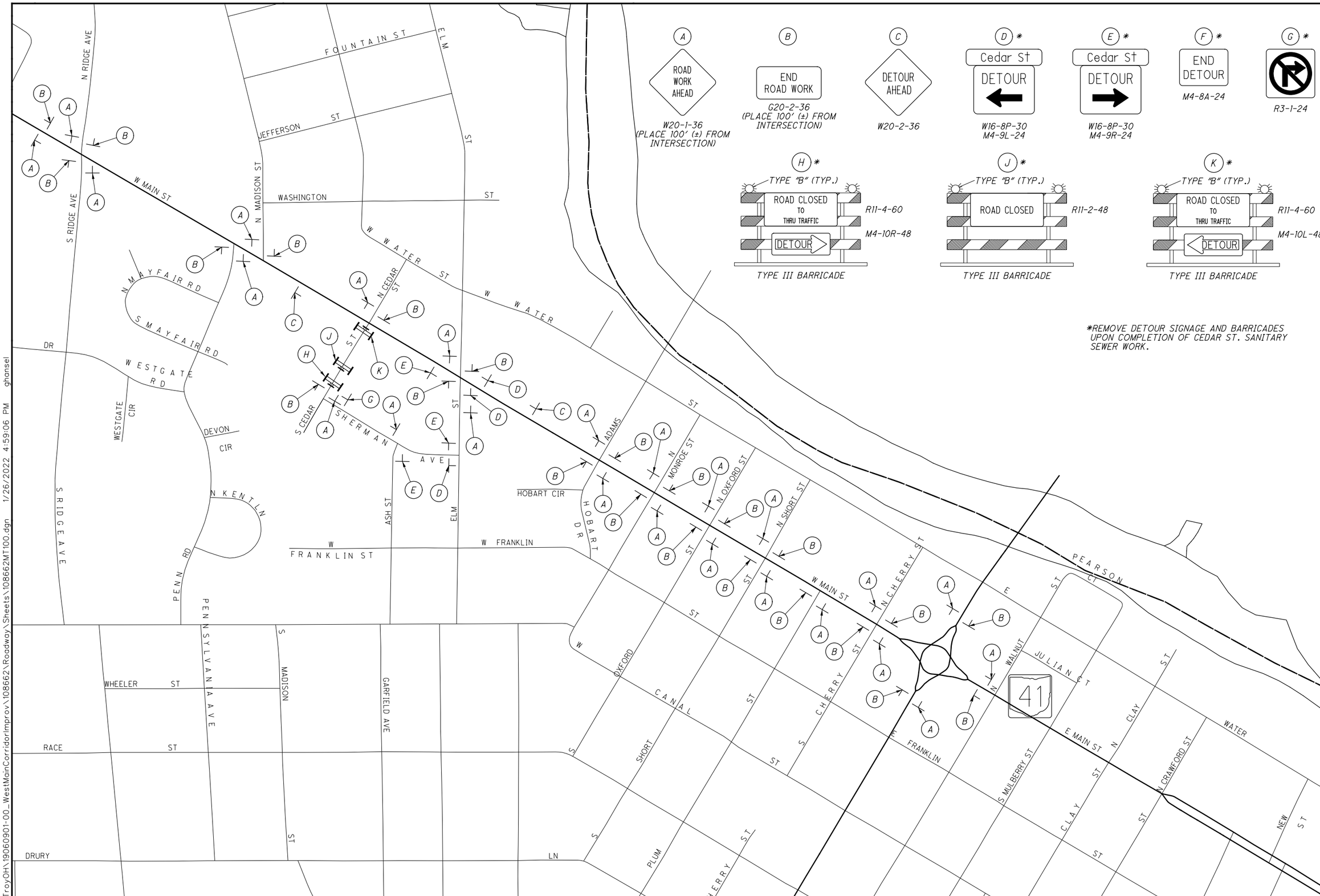

NTS

HORIZONTAL SCALE IN FEET

CALCULATED LDW

CHECKED JWB

MAINTENANCE OF TRAFFIC SIGN SCHEMATIC

MIA-41-09.49

L:\TroyOH\19060901-00_WestMainCorridorImprov\108662\Roadway\Sheets\108662MT100.dgn 1/26/2022 4:59:06 PM ghansel

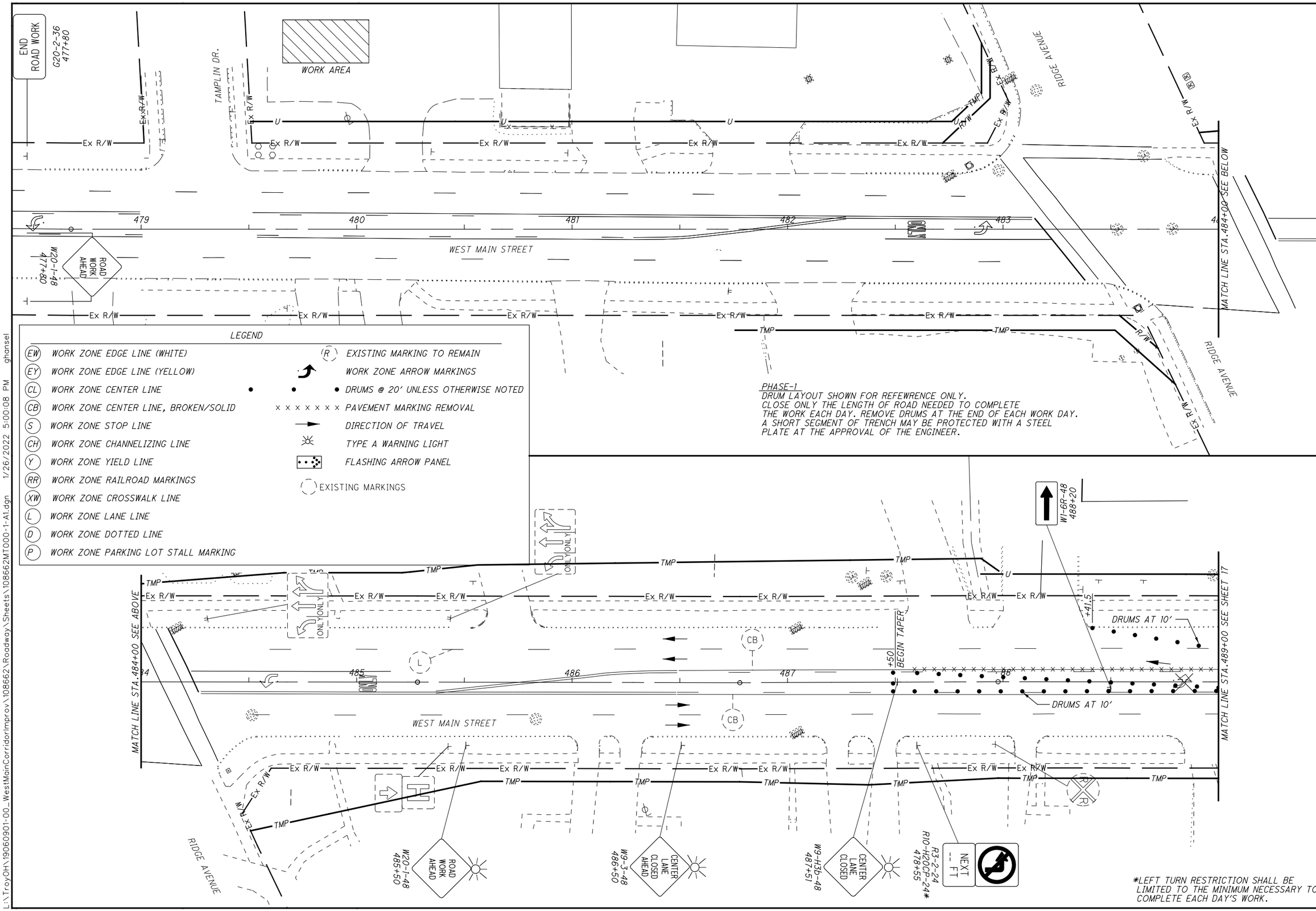

HORIZONTAL SCALE IN FEET 0 10 20 40

CALCULATED LDW
CHECKED JWB

MAINTENANCE OF TRAFFIC PHASE 1A

MIA-41-09.49

L:\Troy\OH\19060901-00_WestMainCorridorImprov\108662\Roadway\Sheets\108662MT000-1-A1.dgn 1/26/2022 5:00:08 PM ghansel

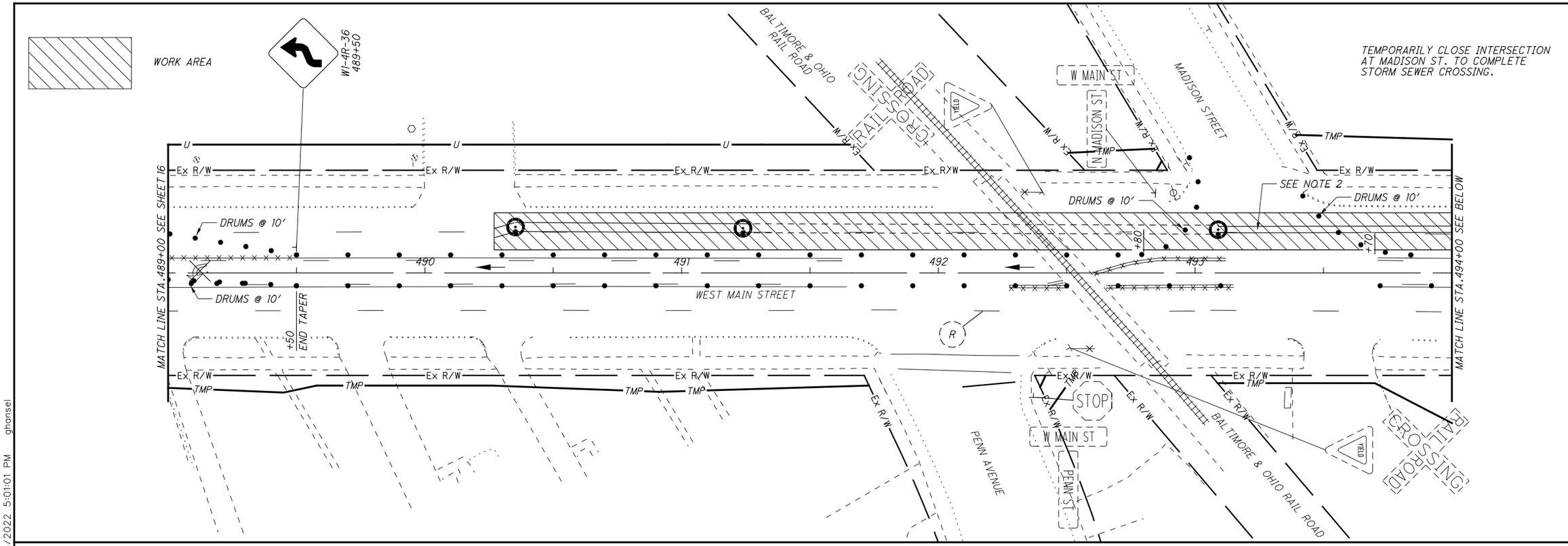

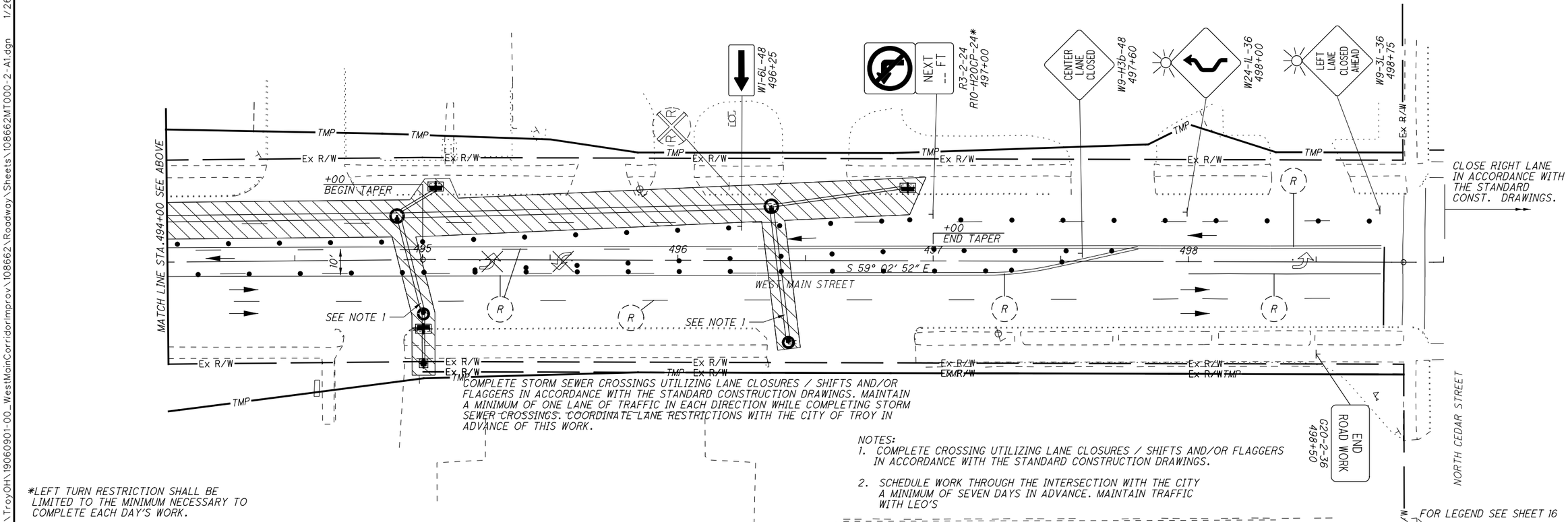

COMPLETE STORM SEWER CROSSINGS UTILIZING LANE CLOSURES / SHIFTS AND/OR FLAGGERS IN ACCORDANCE WITH THE STANDARD CONSTRUCTION DRAWINGS. MAINTAIN A MINIMUM OF ONE LANE OF TRAFFIC IN EACH DIRECTION WHILE COMPLETING STORM SEWER CROSSINGS. COORDINATE LANE RESTRICTIONS WITH THE CITY OF TROY IN ADVANCE OF THIS WORK.

NOTES:
1. COMPLETE CROSSING UTILIZING LANE CLOSURES / SHIFTS AND/OR FLAGGERS IN ACCORDANCE WITH THE STANDARD CONSTRUCTION DRAWINGS.
2. SCHEDULE WORK THROUGH THE INTERSECTION WITH THE CITY A MINIMUM OF SEVEN DAYS IN ADVANCE. MAINTAIN TRAFFIC WITH LEO'S

*LEFT TURN RESTRICTION SHALL BE LIMITED TO THE MINIMUM NECESSARY TO COMPLETE EACH DAY'S WORK.

HORIZONTAL SCALE IN FEET 0 10 20 40

CALCULATED LDW
CHECKED JWB

MAINTENANCE OF TRAFFIC PHASE 1A

MIA-41-09.49

L:\TroyOH\19060901-00_WestMainCorridorImprov\108662\Roadway\Sheets\108662MT000-2-A1.dgn 1/26/2022 5:01:01 PM ghansel

PHASE 1B
DRUM LAYOUT SHOWN FOR REFERENCE. CLOSE ONLY THE LENGH OF ROAD NEEDED TO COMPLETE THE WORK EACH DAY. REMOVE DRUMS AT THE END OF EACH WORK DAY. BACKFILL TRENCHES AT THE END OF EACH DAY. A SHORT SEGMENT OF TRENCH MAY BE PROTECTED WITH A STEEL PLATE AT THE APPROVAL OF THE ENGINER.

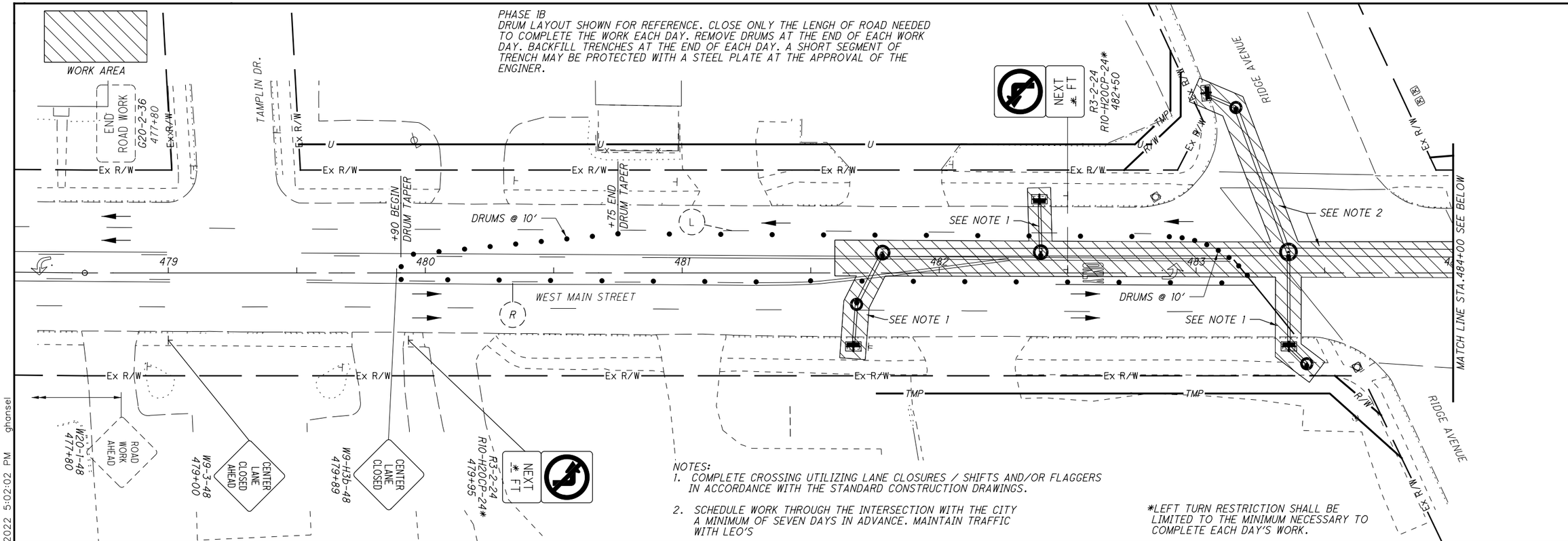

NOTES:
1. COMPLETE CROSSING UTILIZING LANE CLOSURES / SHIFTS AND/OR FLAGGERS IN ACCORDANCE WITH THE STANDARD CONSTRUCTION DRAWINGS.
2. SCHEDULE WORK THROUGH THE INTERSECTION WITH THE CITY A MINIMUM OF SEVEN DAYS IN ADVANCE. MAINTAIN TRAFFIC WITH LEO'S

*LEFT TURN RESTRICTION SHALL BE LIMITED TO THE MINIMUM NECESSARY TO COMPLETE EACH DAY'S WORK.

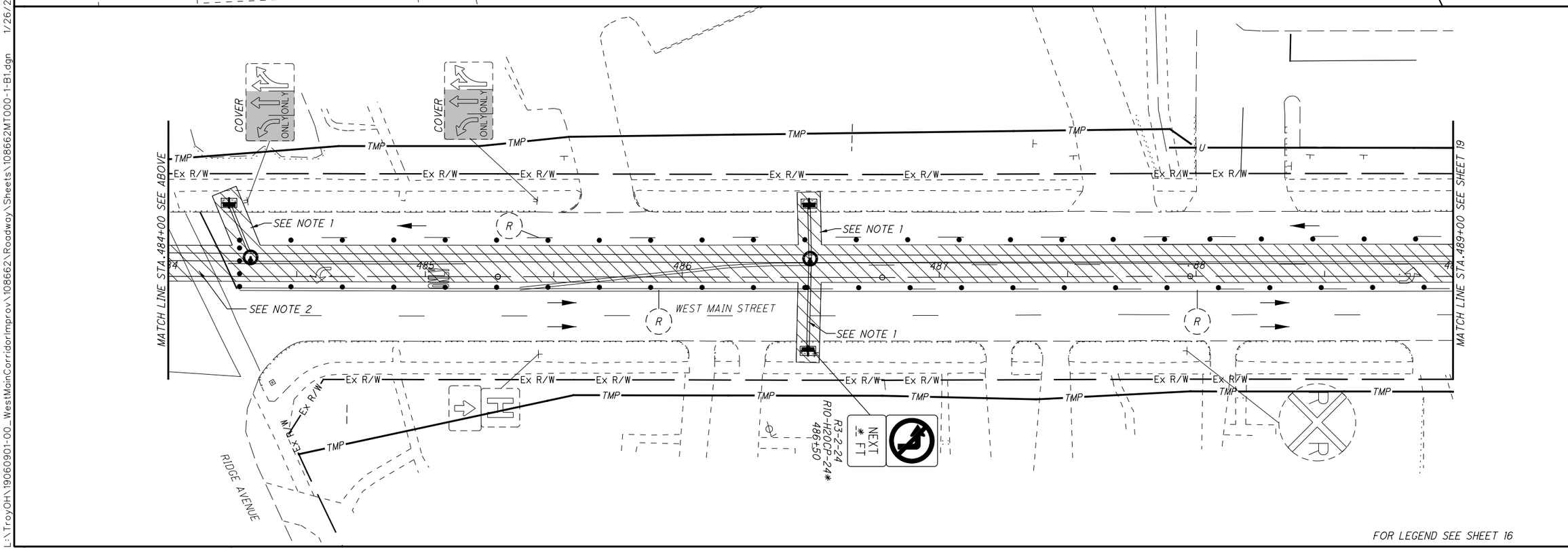

FOR LEGEND SEE SHEET 16

N

HORIZONTAL SCALE IN FEET 0 10 20 40

CALCULATED LDW
CHECKED JWB

MAINTENANCE OF TRAFFIC PHASE 1B

MIA-41-09.49

L:\TroyOH\19060901-00_WestMainCorridorImprov\108662\Roadway\Sheets\108662MT000-1-B1.dgn 1/26/2022 5:02:02 PM ghansel

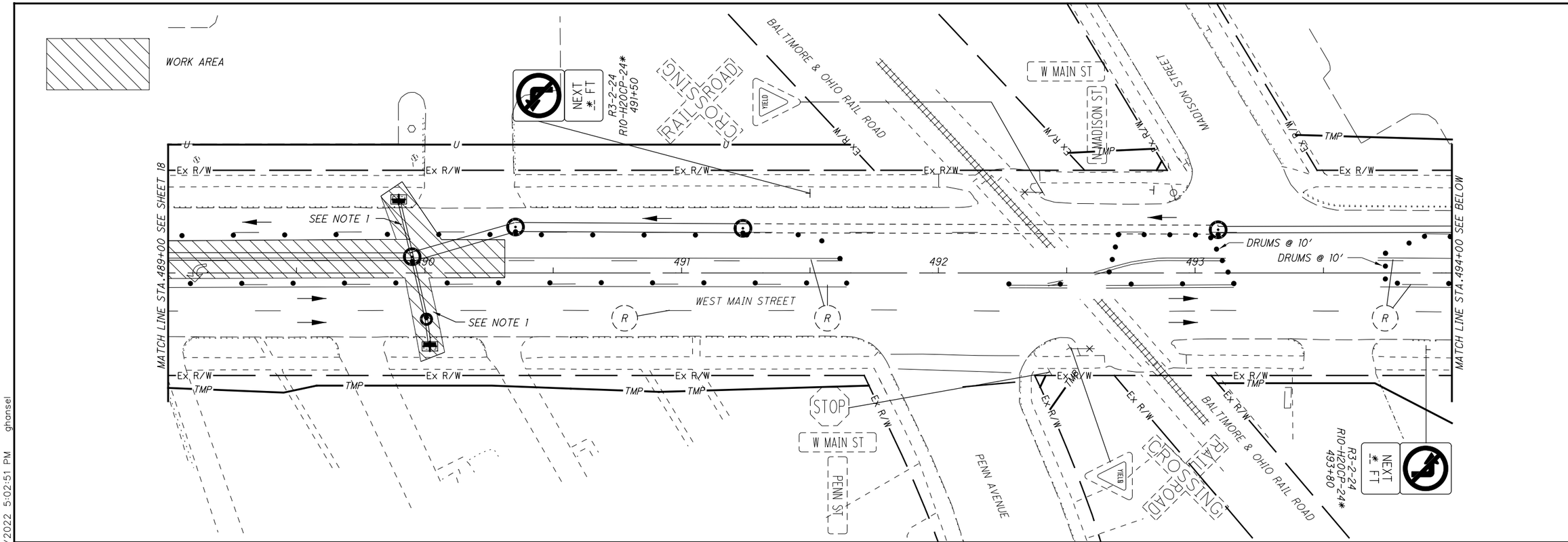

NOTES:
1. COMPLETE CROSSING UTILIZING LANE CLOSURES / SHIFTS AND/OR FLAGGERS IN ACCORDANCE WITH THE STANDARD CONSTRUCTION DRAWINGS.

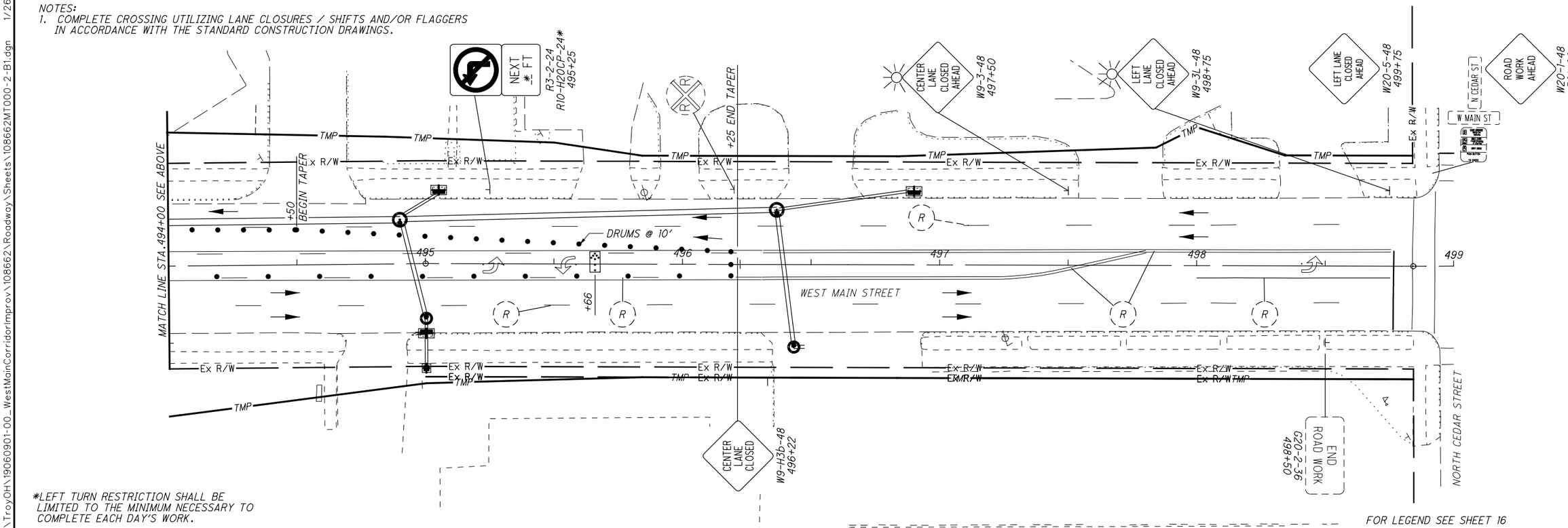

*LEFT TURN RESTRICTION SHALL BE LIMITED TO THE MINIMUM NECESSARY TO COMPLETE EACH DAY'S WORK.

FOR LEGEND SEE SHEET 16

HORIZONTAL SCALE IN FEET 0 10 20 40

CALCULATED LDW
CHECKED JWB

MAINTENANCE OF TRAFFIC PHASE 1B

MIA-41-09.49

L:\TroyOH\19060901-00_WestMainCorridorImprov\108662\Roadway\Sheets\108662MT000-2-B1.dgn 1/26/2022 5:02:51 PM ghansel

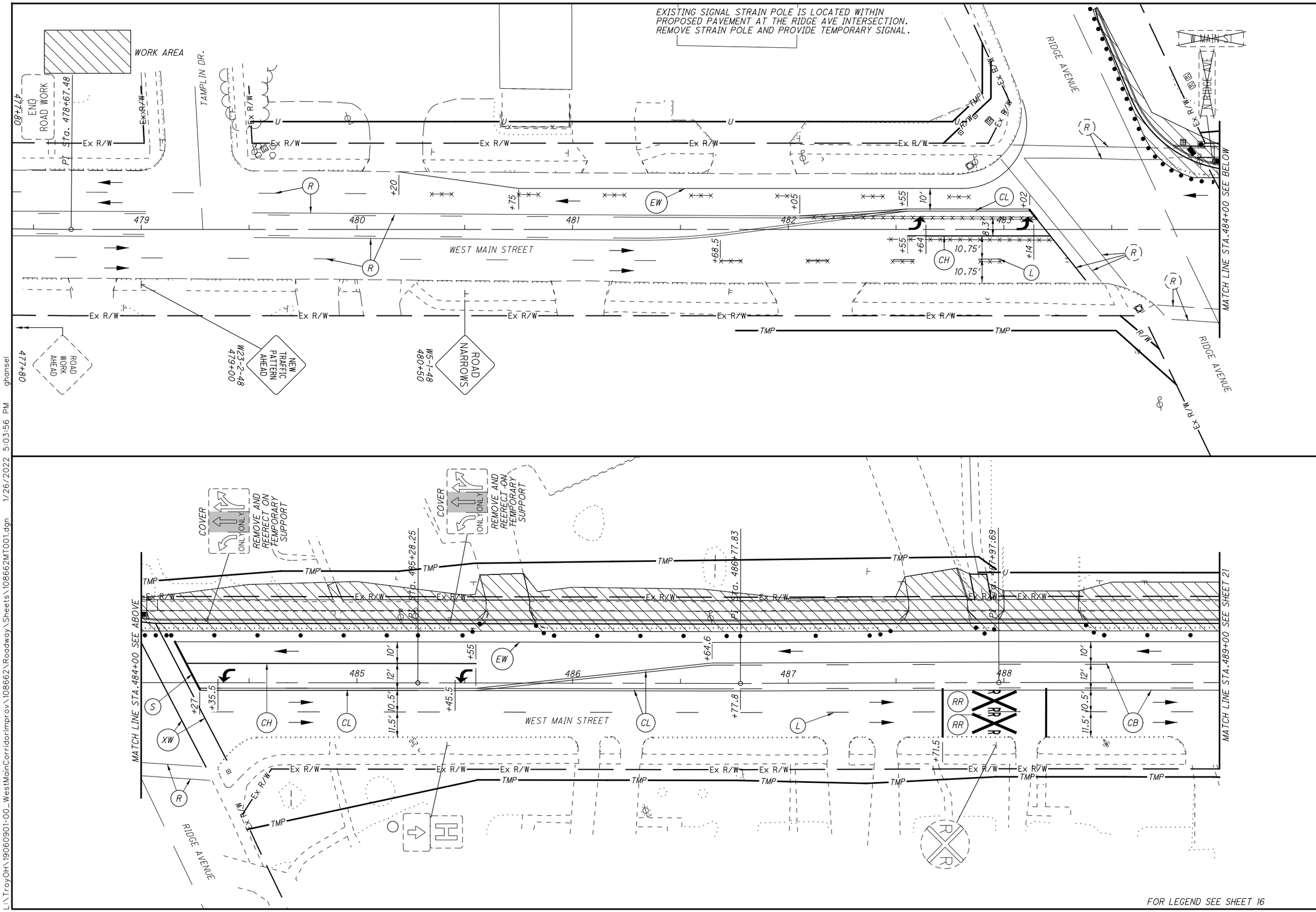

N

0 10 20 40
HORIZONTAL SCALE IN FEET

CALCULATED LDW
CHECKED JWB

MAINTENANCE OF TRAFFIC PHASE 2

MIA-41-09.49

L:\TroyOH\19060901-00_WestMainCorridorImprov\108662\Roadway\Sheets\108662MT001.dgn 1/26/2022 5:03:56 PM ghansel

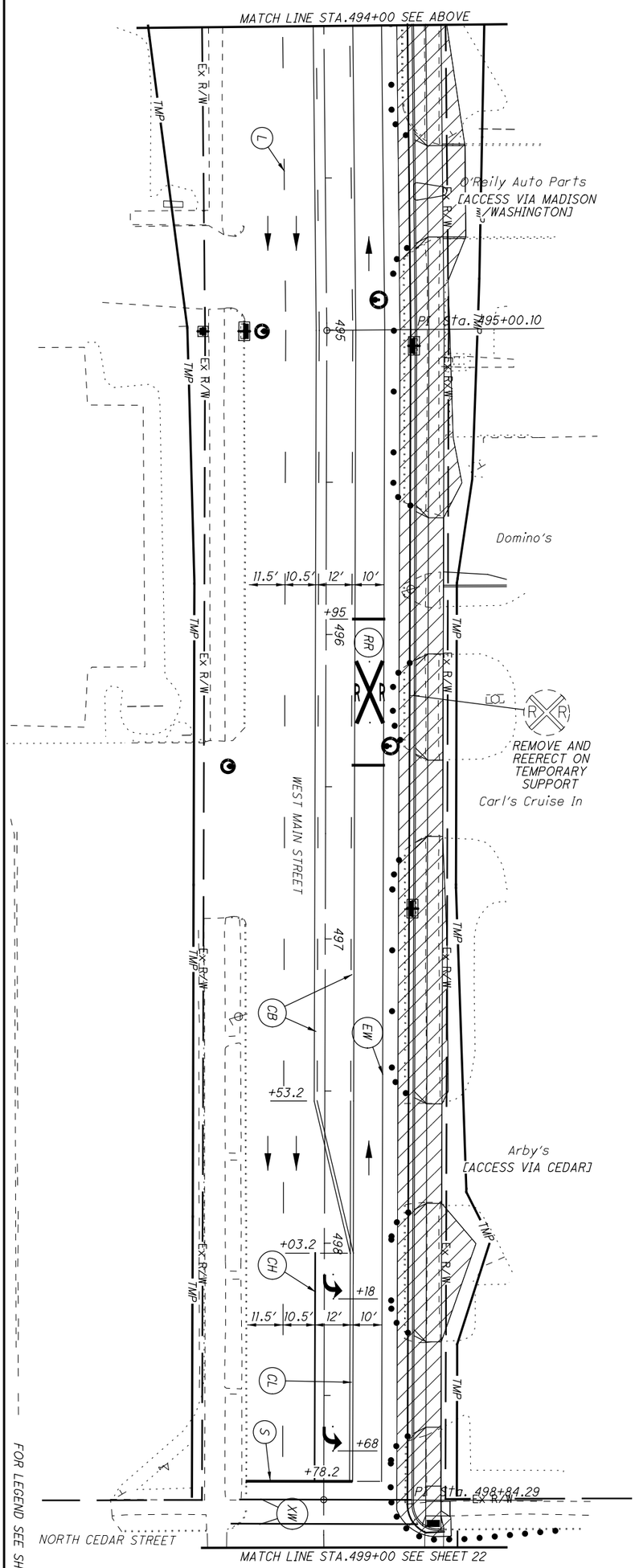

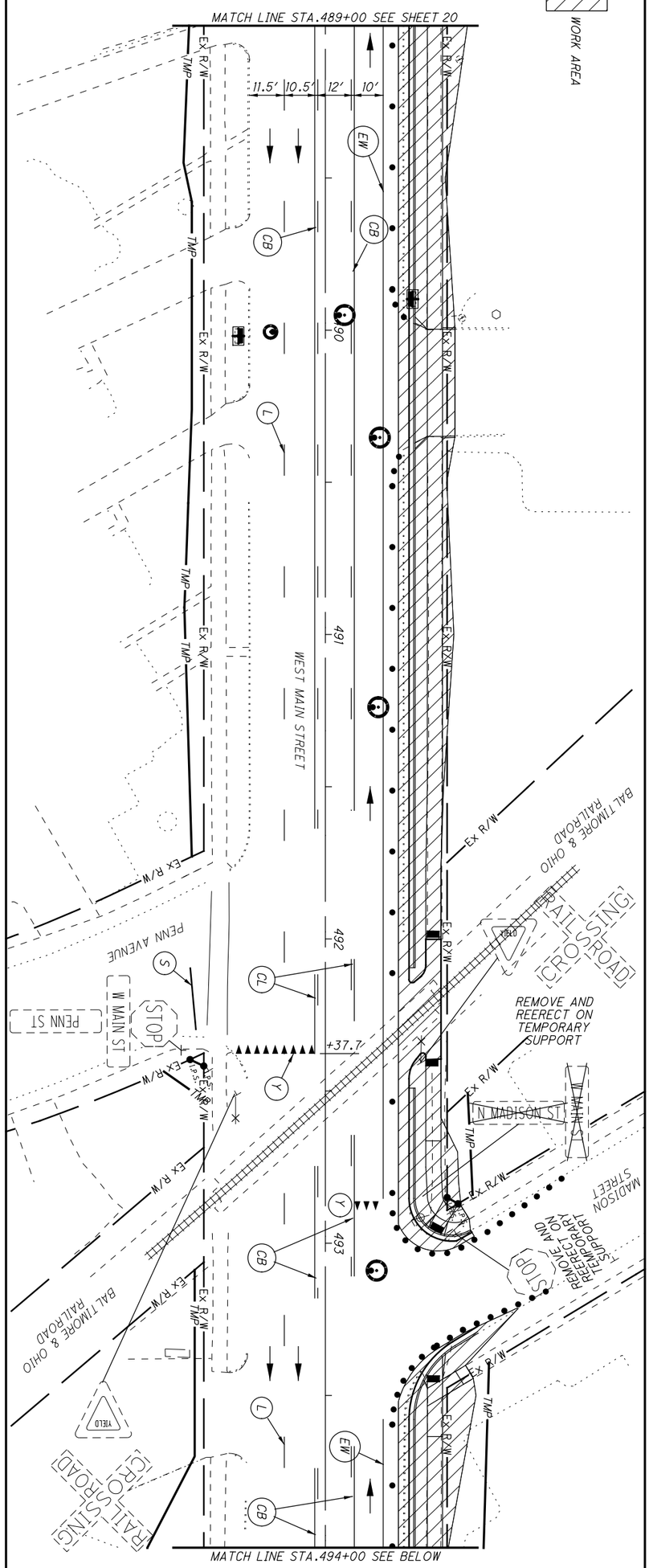

21/222	MIA-41-09.49	MAINTENANCE OF TRAFFIC PHASE 2	CALCULATED LDW CHECKED JWB	0 10 20 40 HORIZONTAL SCALE IN FEET

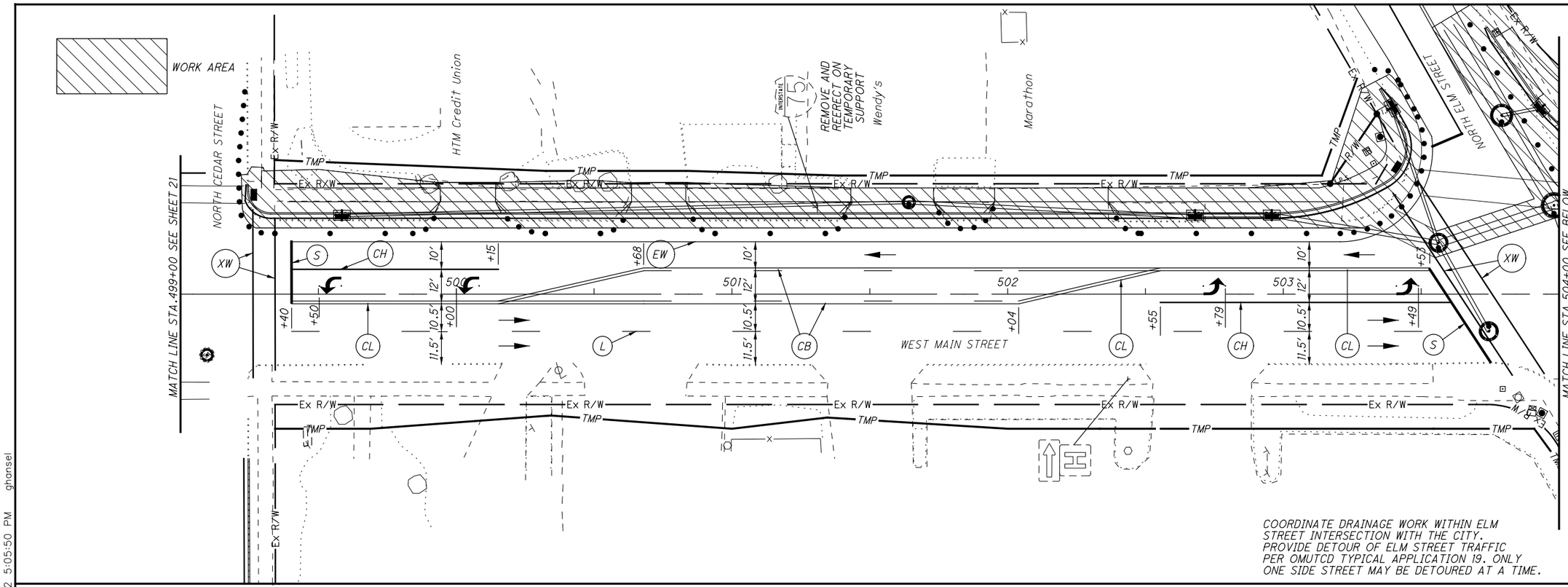

COORDINATE DRAINAGE WORK WITHIN ELM STREET INTERSECTION WITH THE CITY. PROVIDE DETOUR OF ELM STREET TRAFFIC PER OMUTCD TYPICAL APPLICATION 19. ONLY ONE SIDE STREET MAY BE DETOURED AT A TIME.

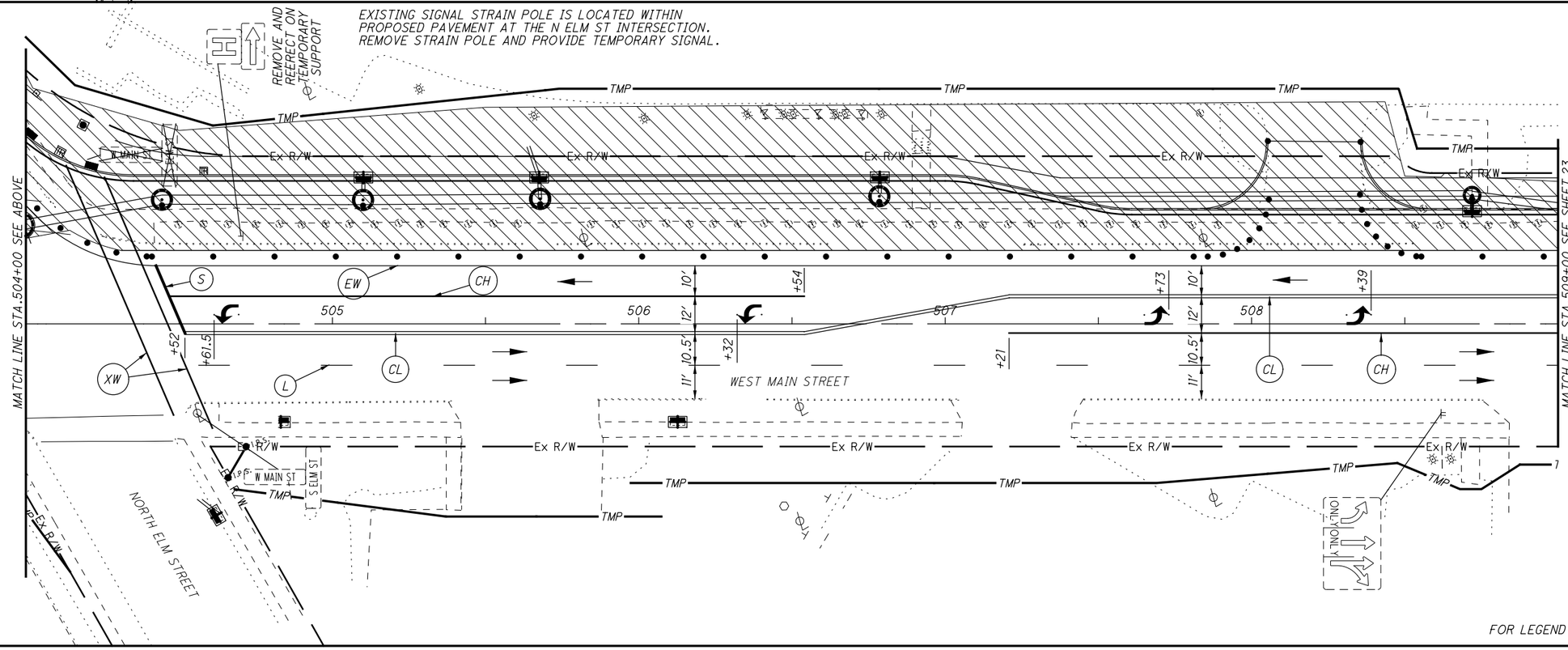

EXISTING SIGNAL STRAIN POLE IS LOCATED WITHIN PROPOSED PAVEMENT AT THE N ELM ST INTERSECTION. REMOVE STRAIN POLE AND PROVIDE TEMPORARY SIGNAL.

FOR LEGEND SEE SHEET 16

HORIZONTAL SCALE IN FEET 0 10 20 40

CALCULATED LDW
CHECKED JWB

MAINTENANCE OF TRAFFIC PHASE 2

MIA-41-09.49

L:\TroyOH\19060901-00_WestMainCorridorImprov\108662\Roadway\Sheets\108662MT003.dgn 1/26/2022 5:05:50 PM ghansel

WORK AREA

EXISTING SIGNAL STRAIN POLE IS LOCATED WITHIN PROPOSED PAVEMENT AT THE ADAMS ST INTERSECTION. REMOVE STRAIN POLE AND PROVIDE TEMPORARY SIGNAL.

MATCH LINE STA.509+00 SEE SHEET 22

MATCH LINE STA.514+00 SEE BELOW

WEST MAIN STREET

ADAMS STREET

PARTIALLY REMOVE PARKING PAVEMENT MARKING TO PROVIDE 11' THRU LANE (TYP.)

COORDINATE DRAINAGE WORK WITHIN ADAMS STREET, MONROE STREET AND OXFORD STREET INTERSECTIONS WITH THE CITY. PROVIDE DETOURS OF SIDE STREET TRAFFIC PER OMUTCD TYPICAL APPLICATION 19. ONLY ONE SIDE STREET MAY BE DETOURED AT A TIME.

REMOVE AND REERECT ON TEMPORARY SUPPORT

MATCH LINE STA.514+00 SEE ABOVE

MATCH LINE STA.519+00 SEE SHEET 24

WEST MAIN STREET

SOUTH MONROE STREET

SOUTH OXFORD STREET

W MAIN ST

S MONROE ST

PARTIALLY REMOVE PARKING PAVEMENT MARKING TO PROVIDE 11' THRU LANE (TYP.)

FOR LEGEND SEE SHEET 16

HORIZONTAL SCALE IN FEET 0 10 20 40

CALCULATED LDW

CHECKED JWB

MAINTENANCE OF TRAFFIC PHASE 2

MIA-41-09.49

L:\TroyOH\19069901-00_WestMainCorridorImprov\108662\Roadway\Sheets\108662MT004.dgn 1/26/2022 5:06:46 PM ghansel

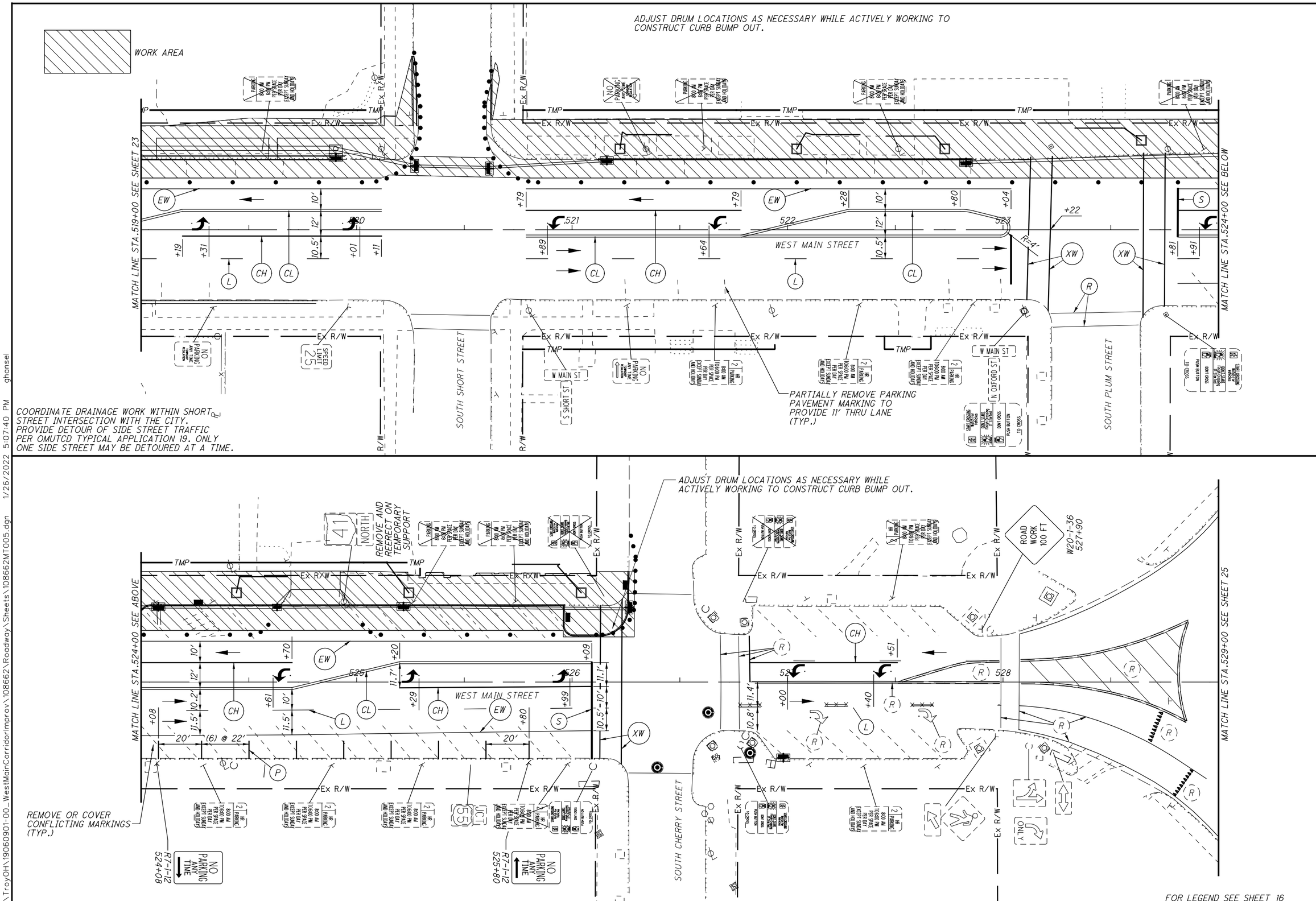

HORIZONTAL SCALE IN FEET 0 10 20 40

CALCULATED LDW
CHECKED JWB

MAINTENANCE OF TRAFFIC PHASE 2

MIA-41-09.49

L:\Troy OH\19060901-00_WestMainCorridorImprov\108662\Roadway\Sheets\108662MT005.dgn 1/26/2022 5:07:40 PM ghansel

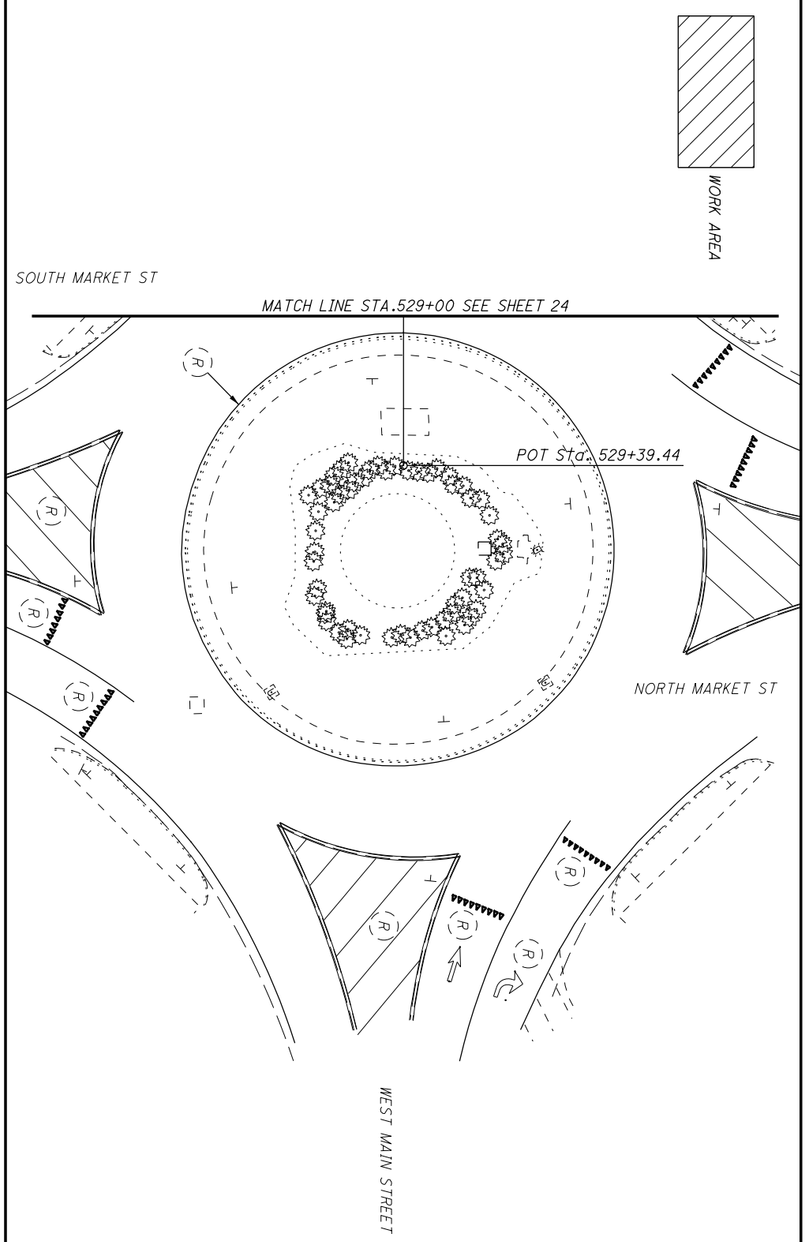

FOR LEGEND SEE SHEET 16

MIA-41-09.49

MAINTENANCE OF TRAFFIC
PHASE 2

CALCULATED LDW
CHECKED JWB

0 10 20 40
HORIZONTAL SCALE IN FEET

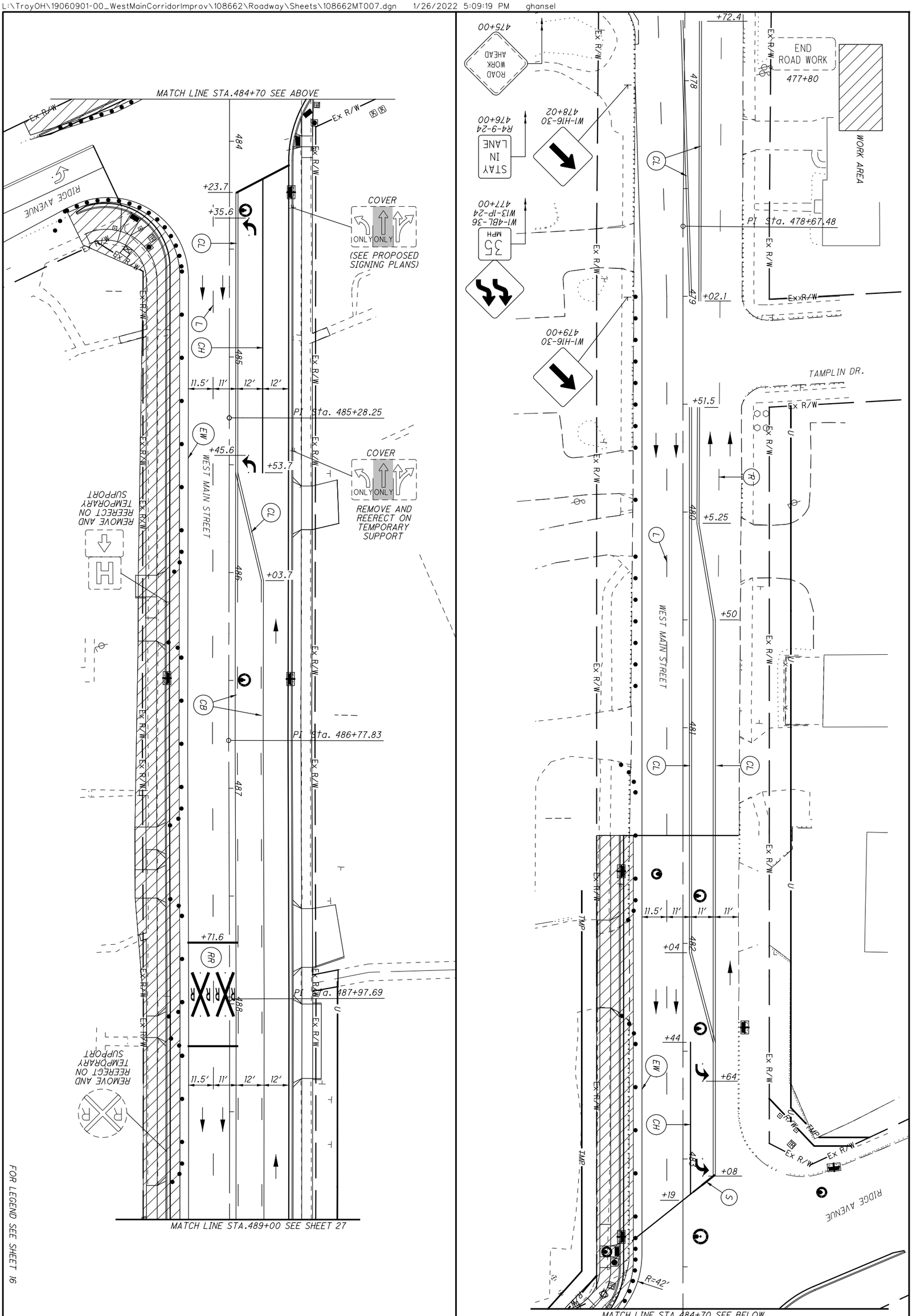

26 / 222	MIA-41-09.49	MAINTENANCE OF TRAFFIC PHASE 3	CALCULATED LDW CHECKED JWB HORIZONTAL SCALE IN FEET 0 10 20 40

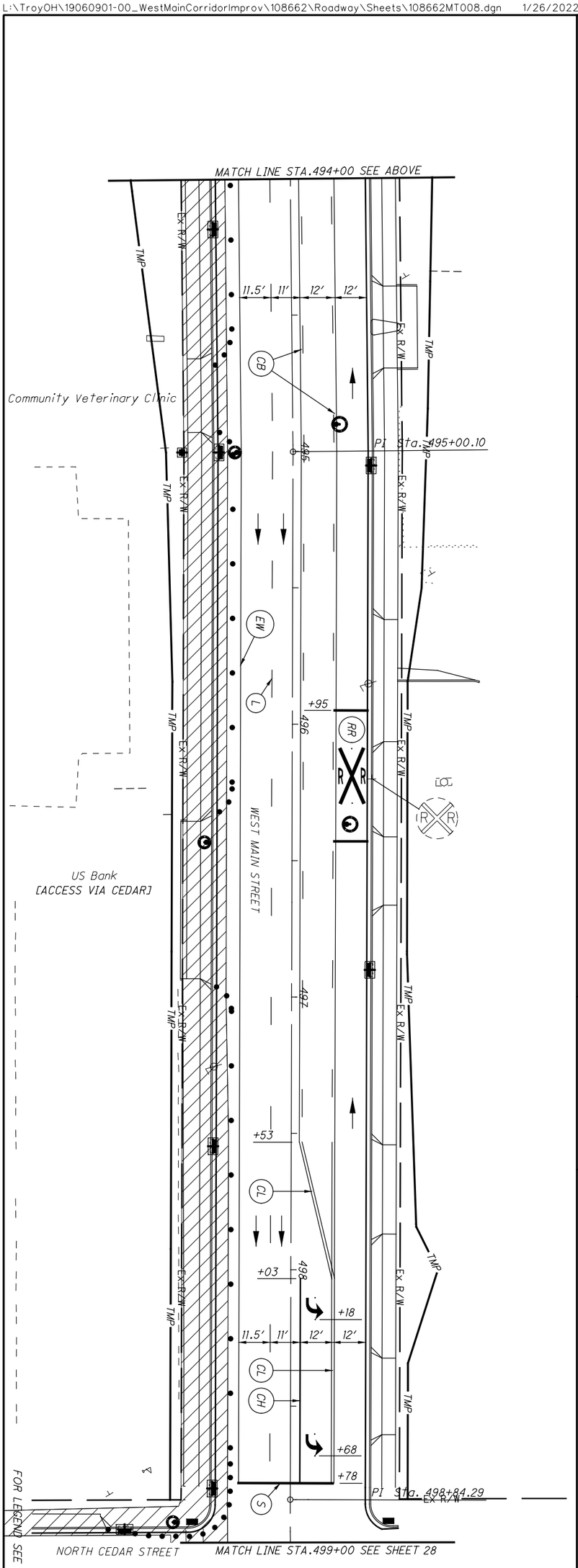

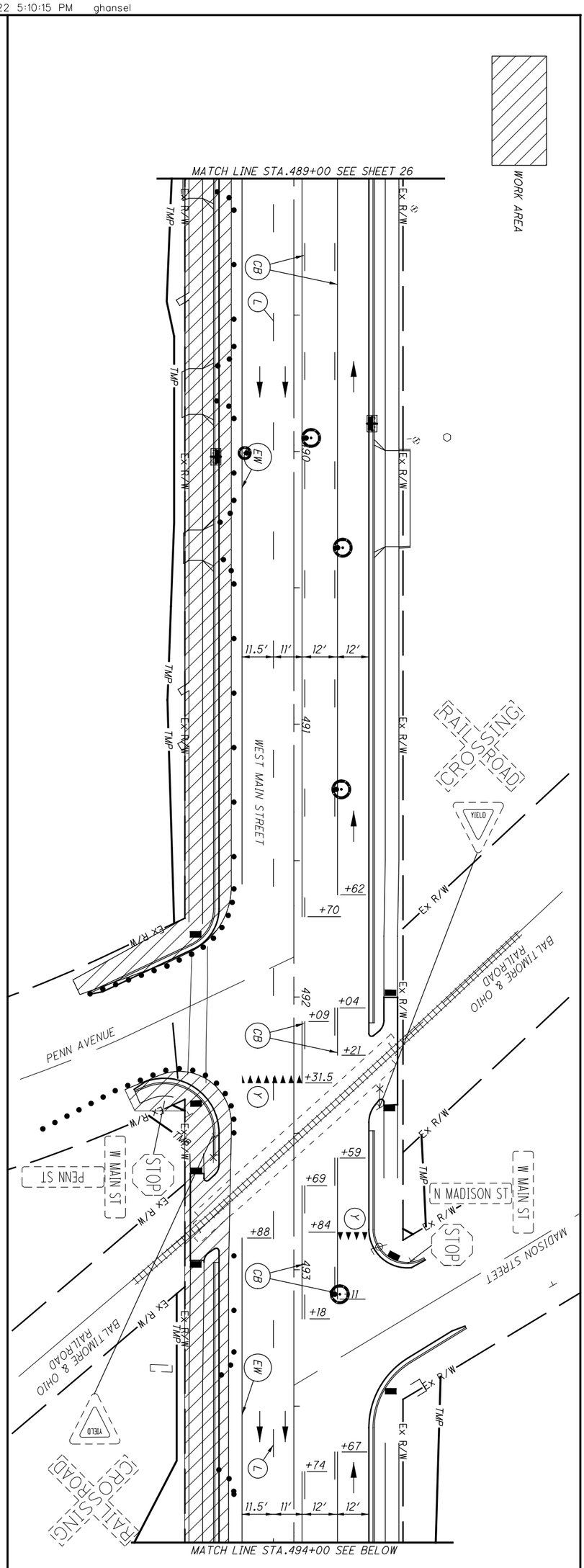

27 / 222	MIA-41-09.49	MAINTENANCE OF TRAFFIC PHASE 3	CALCULATED LDW CHECKED JWB	0 10 20 40 HORIZONTAL SCALE IN FEET

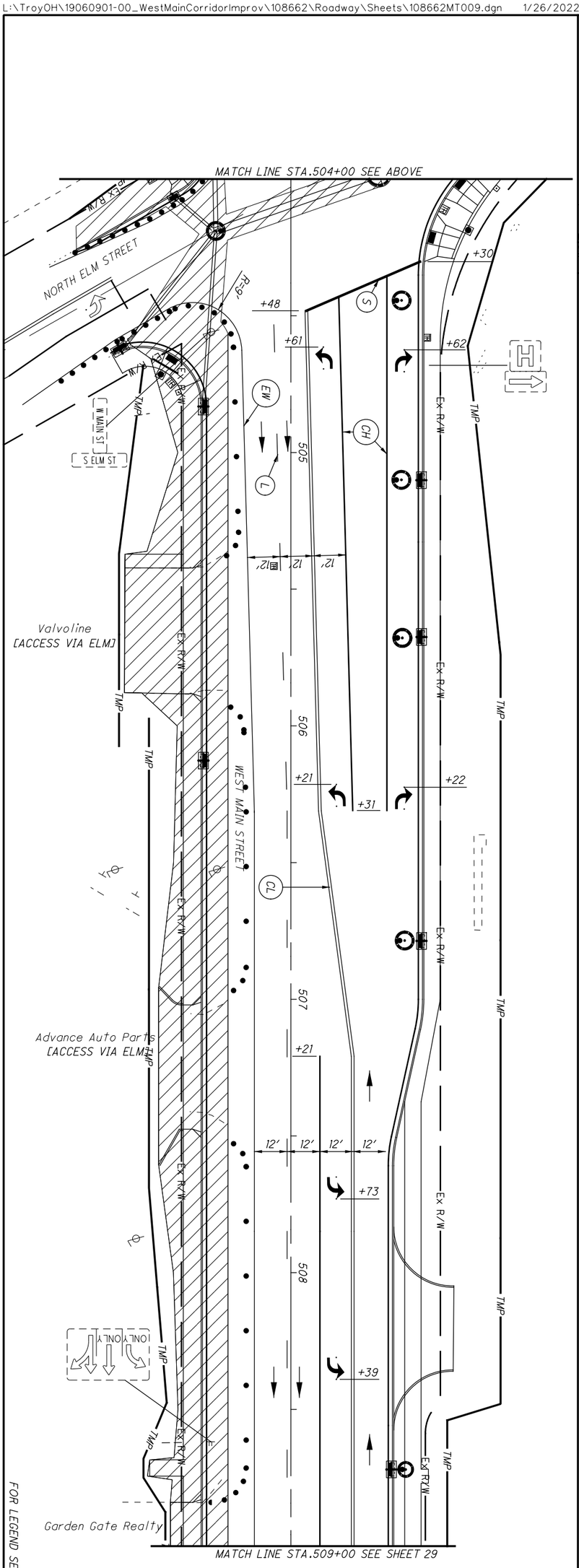

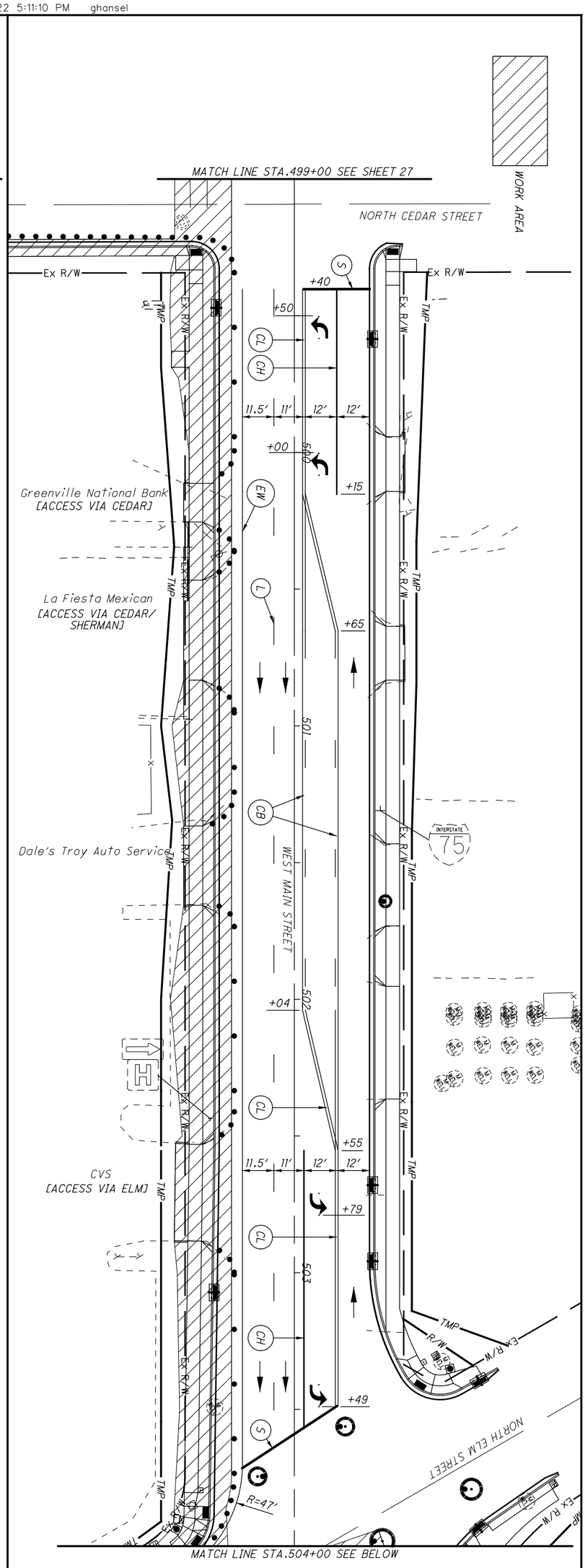

FOR LEGEND SEE SHEET 16

28 / 222	MIA-41-09.49	MAINTENANCE OF TRAFFIC PHASE 3	CALCULATED LDW CHECKED JWB	0 10 20 40 HORIZONTAL SCALE IN FEET

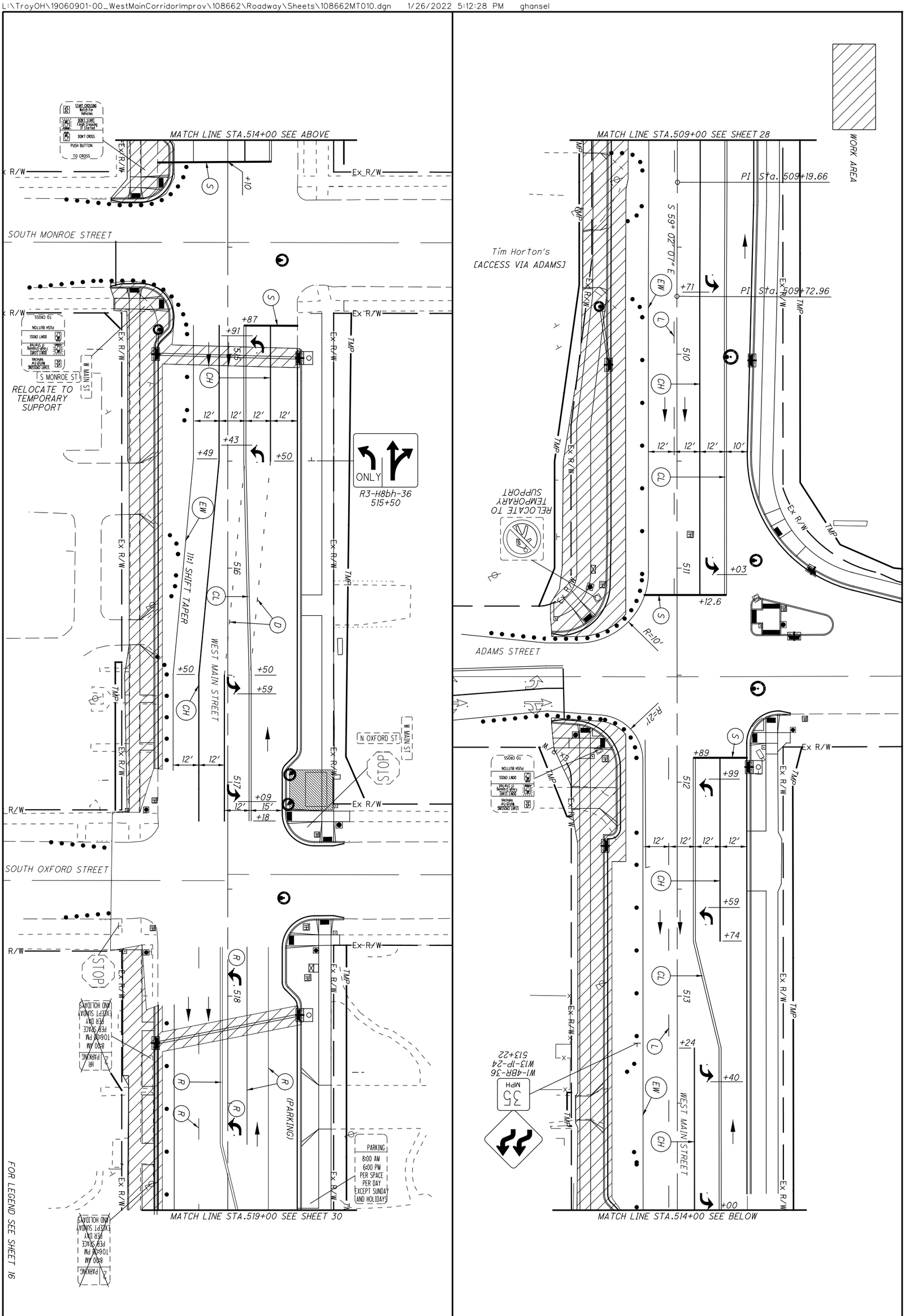

FOR LEGEND SEE SHEET 16

29 / 222	MIA-41-09.49	MAINTENANCE OF TRAFFIC PHASE 3	CALCULATED LDW CHECKED JWB	0 10 20 40 HORIZONTAL SCALE IN FEET

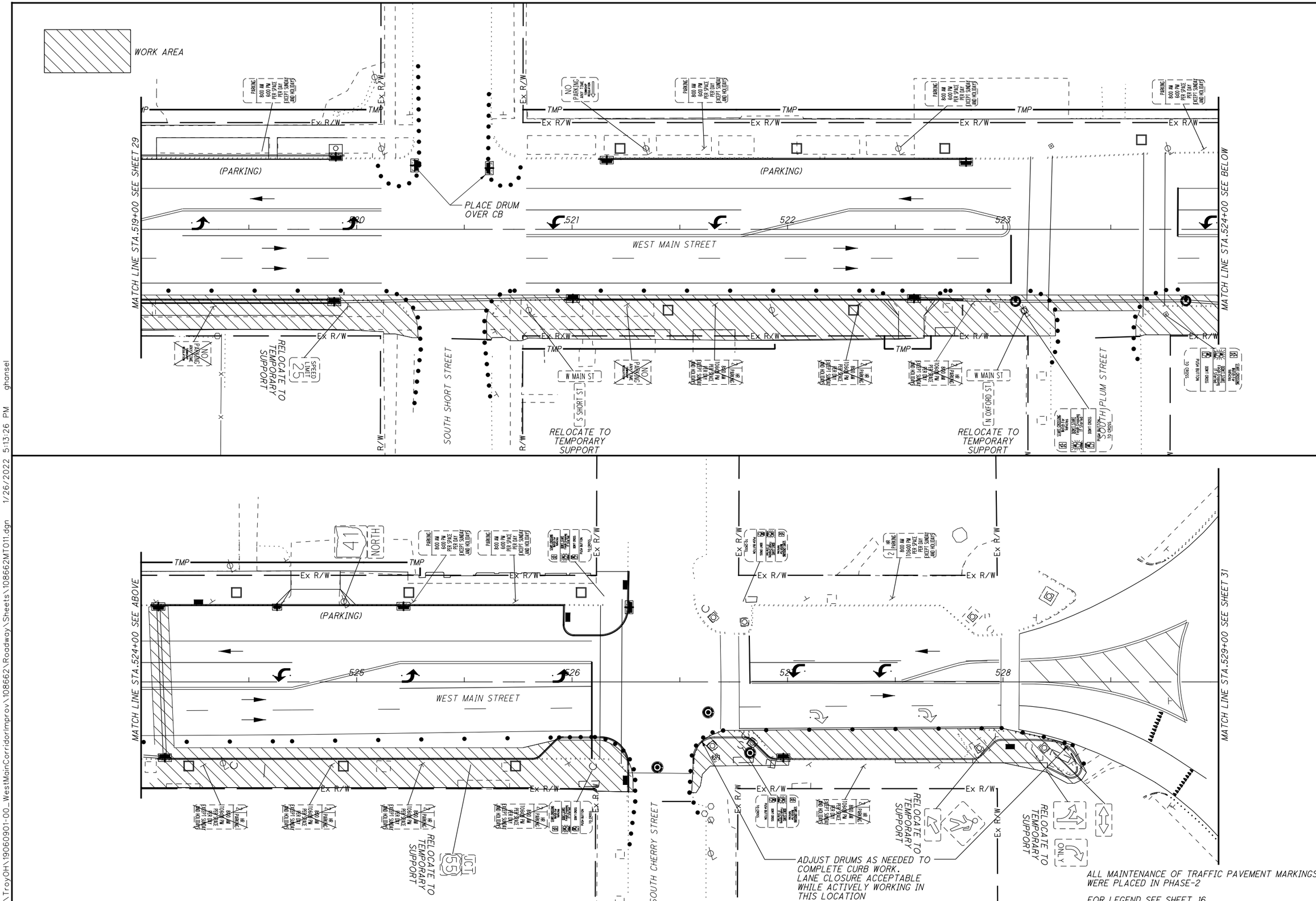

MAINTENANCE OF TRAFFIC PHASE 3

MIA-41-09.49

L:\TroyOH\19060901-00_WestMainCorridorImprov\108662\Roadway\Sheets\108662MT011.dgn 1/26/2022 5:13:26 PM ghansel

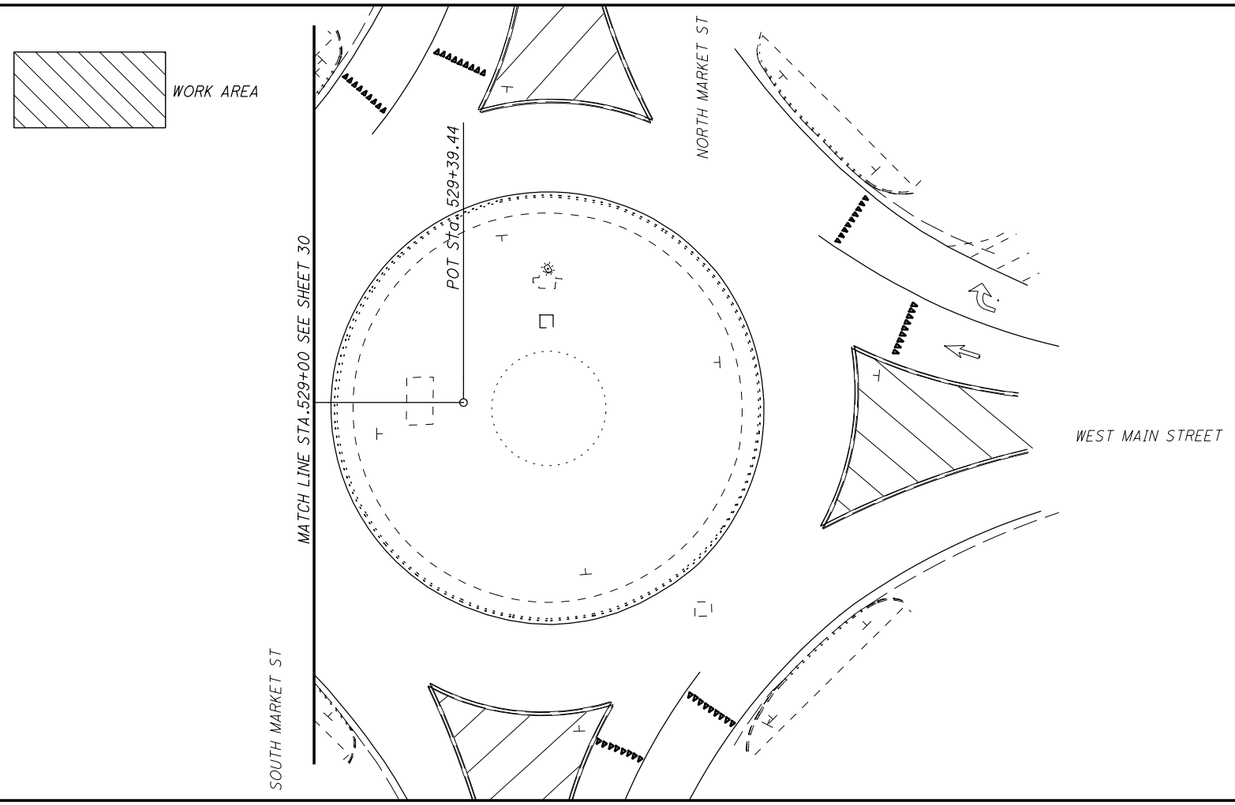

ALL MAINTENANCE OF TRAFFIC PAVEMENT MARKINGS WERE PLACED IN PHASE-2

FOR LEGEND SEE SHEET 16

HORIZONTAL SCALE IN FEET
0 10 20 40

CALCULATED LDW
CHECKED JWB

MAINTENANCE OF TRAFFIC PHASE 3

MIA-41-09.49

L:\TroyOH\19060901-00_WestMainCorridorImprov\108662\Roadway\Sheets\108662MT012.dgn 1/26/2022 5:14:01 PM ghansel

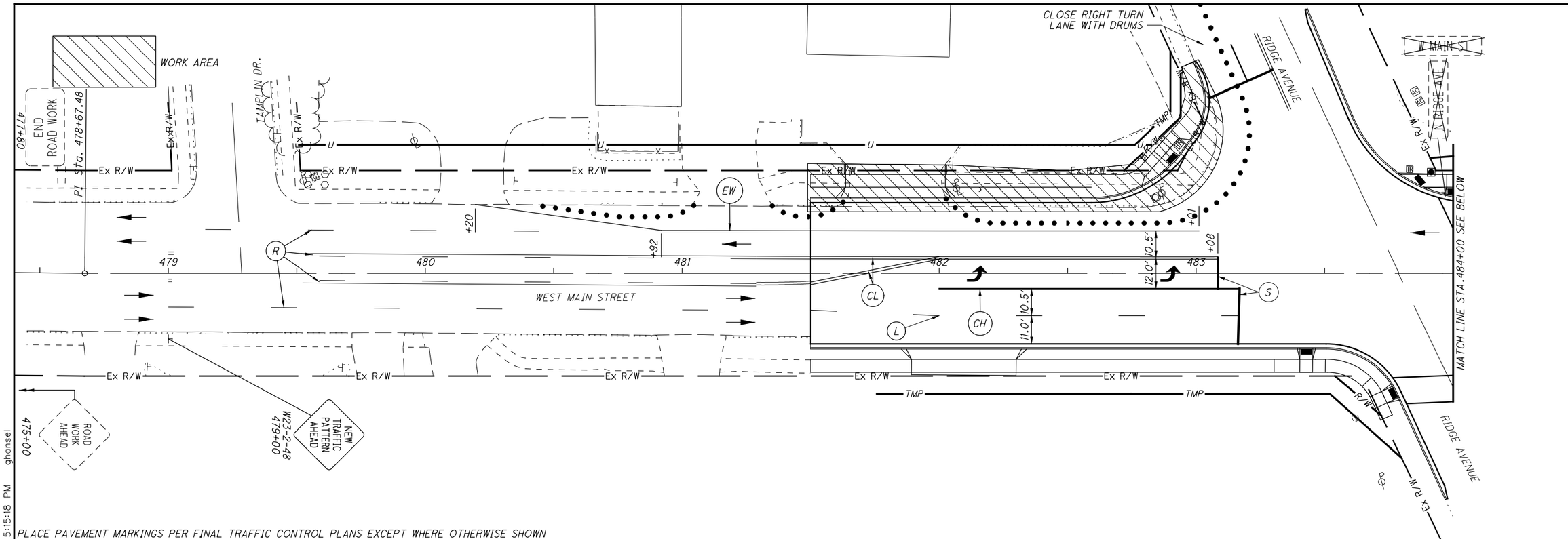

PLACE PAVEMENT MARKINGS PER FINAL TRAFFIC CONTROL PLANS EXCEPT WHERE OTHERWISE SHOWN

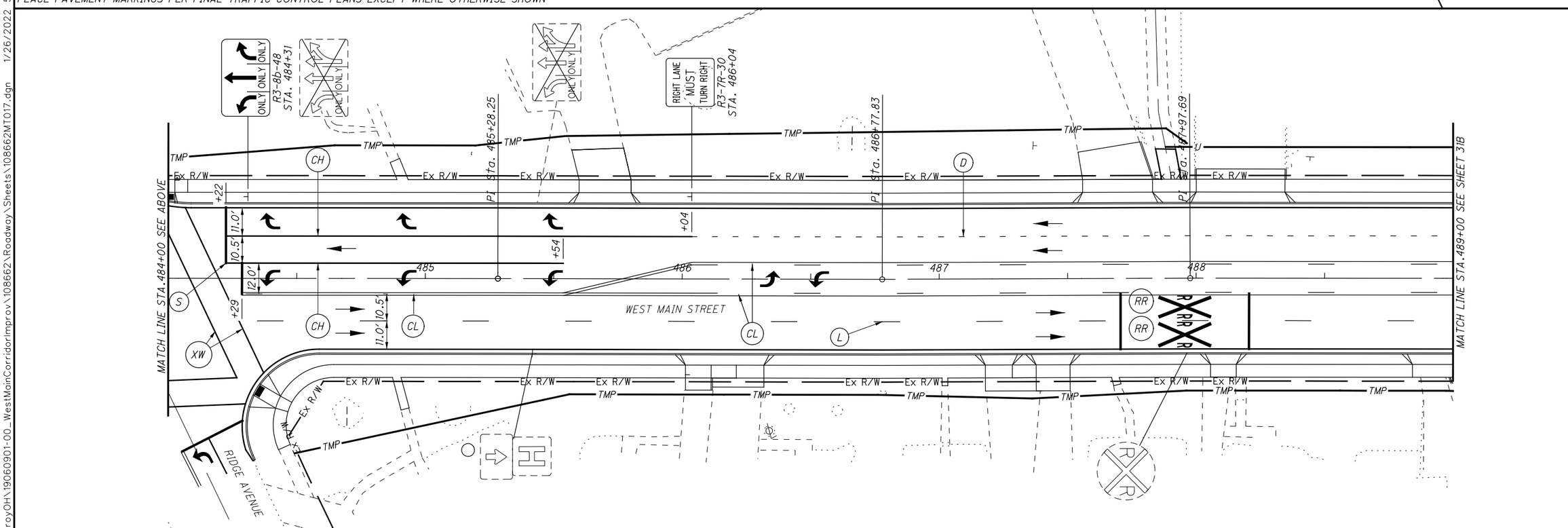

PLACE PAVEMENT MARKINGS PER FINAL TRAFFIC CONTROL PLANS EXCEPT WHERE OTHERWISE SHOWN

FOR LEGEND SEE SHEET 16

HORIZONTAL SCALE IN FEET 0 10 20 40

CALCULATED LDW
CHECKED JWB

MAINTENANCE OF TRAFFIC PHASE 4

MIA-41-09.49

L:\TroyOH\19060901-00_WestMainCorridorImprov\108662\Roadway\Sheets\108662MT017.dgn 1/26/2022 5:15:18 PM ghansel

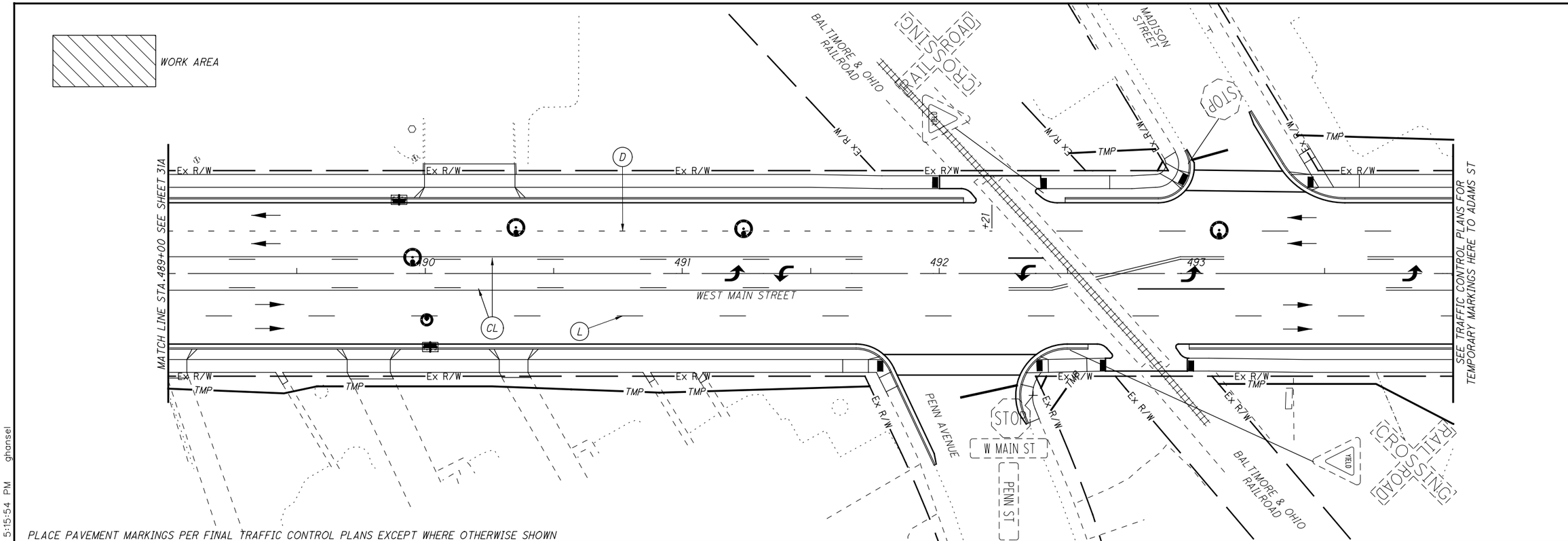

PLACE PAVEMENT MARKINGS PER FINAL TRAFFIC CONTROL PLANS EXCEPT WHERE OTHERWISE SHOWN

HORIZONTAL SCALE IN FEET 0 10 20 40

CALCULATED LDW
CHECKED JWB

MAINTENANCE OF TRAFFIC PHASE 4

MIA-41-09.49

31B
222

L:\TroyOH\19060901-00_WestMainCorridorImprov\108662\Roadway\Sheets\108662MT018.dgn 1/26/2022 5:15:54 PM ghansel

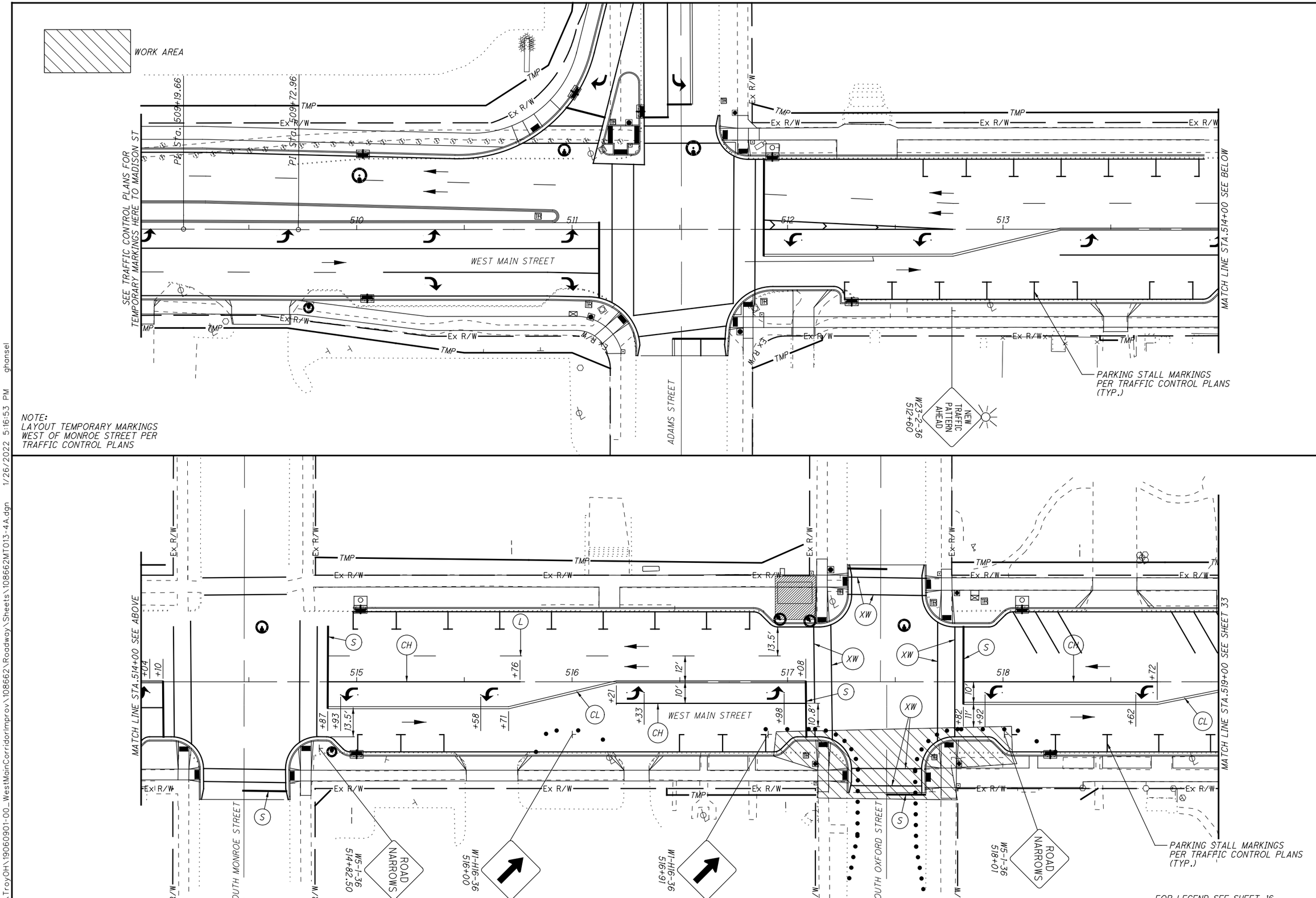

HORIZONTAL SCALE IN FEET
0 10 20 40

CALCULATED LDW
CHECKED JWB

MAINTENANCE OF TRAFFIC PHASE 4A

MIA-41-09.49

L:\TroyOH\19060901-00_WestMainCorridorImprov\108662\Roadway\Sheets\108662MT013-4A.dgn 1/26/2022 5:16:53 PM ghansel

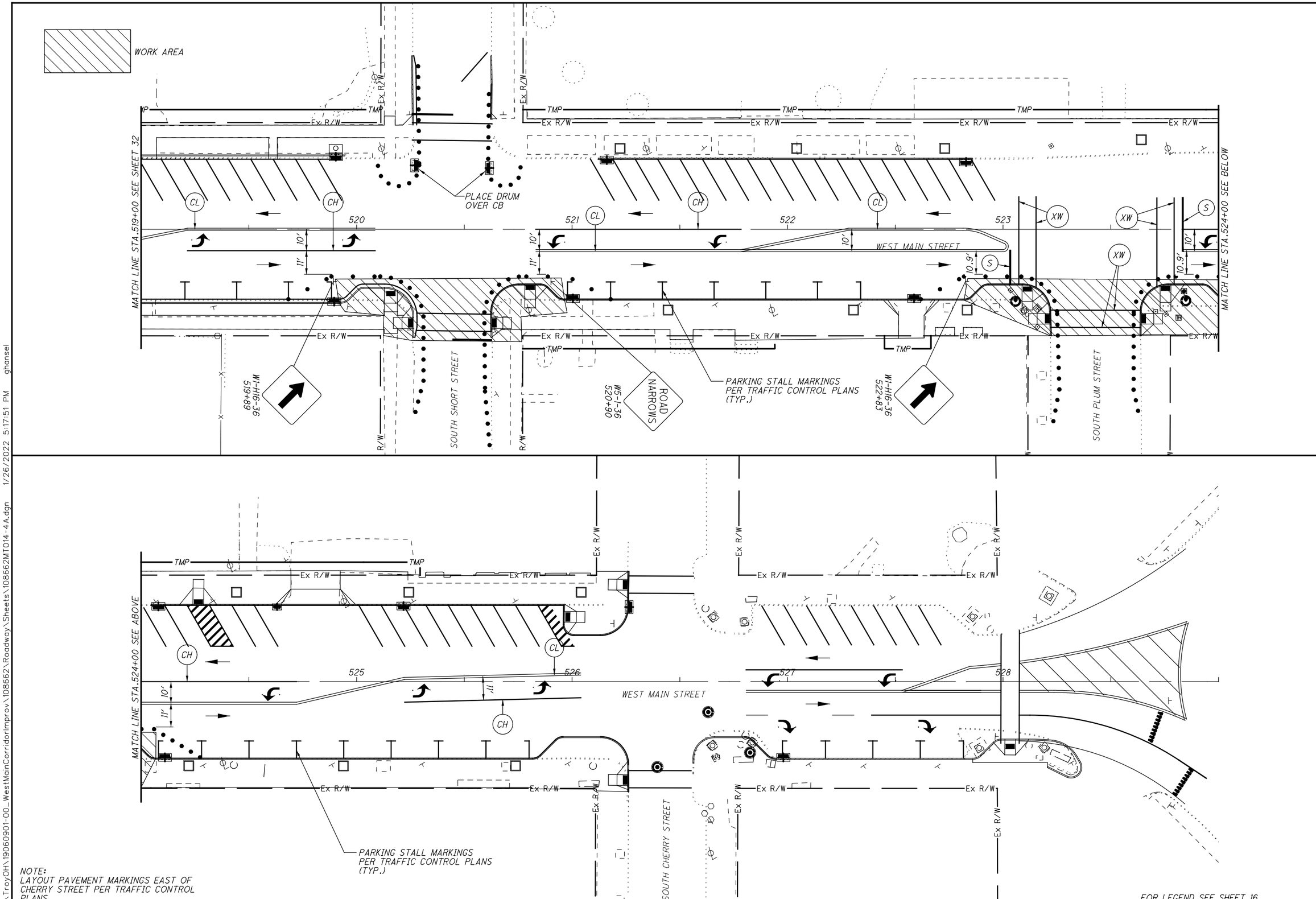

NOTE:
LAYOUT PAVEMENT MARKINGS EAST OF CHERRY STREET PER TRAFFIC CONTROL PLANS

FOR LEGEND SEE SHEET 16

HORIZONTAL SCALE IN FEET 0 10 20 40

CALCULATED LDW
CHECKED JWB

MAINTENANCE OF TRAFFIC PHASE 4A

MIA-41-09.49

L:\TroyOH\19060901-00_WestMainCorridorImprov\108662\Roadway\Sheets\108662MT014-4A.dgn 1/26/2022 5:17:51 PM ghansel

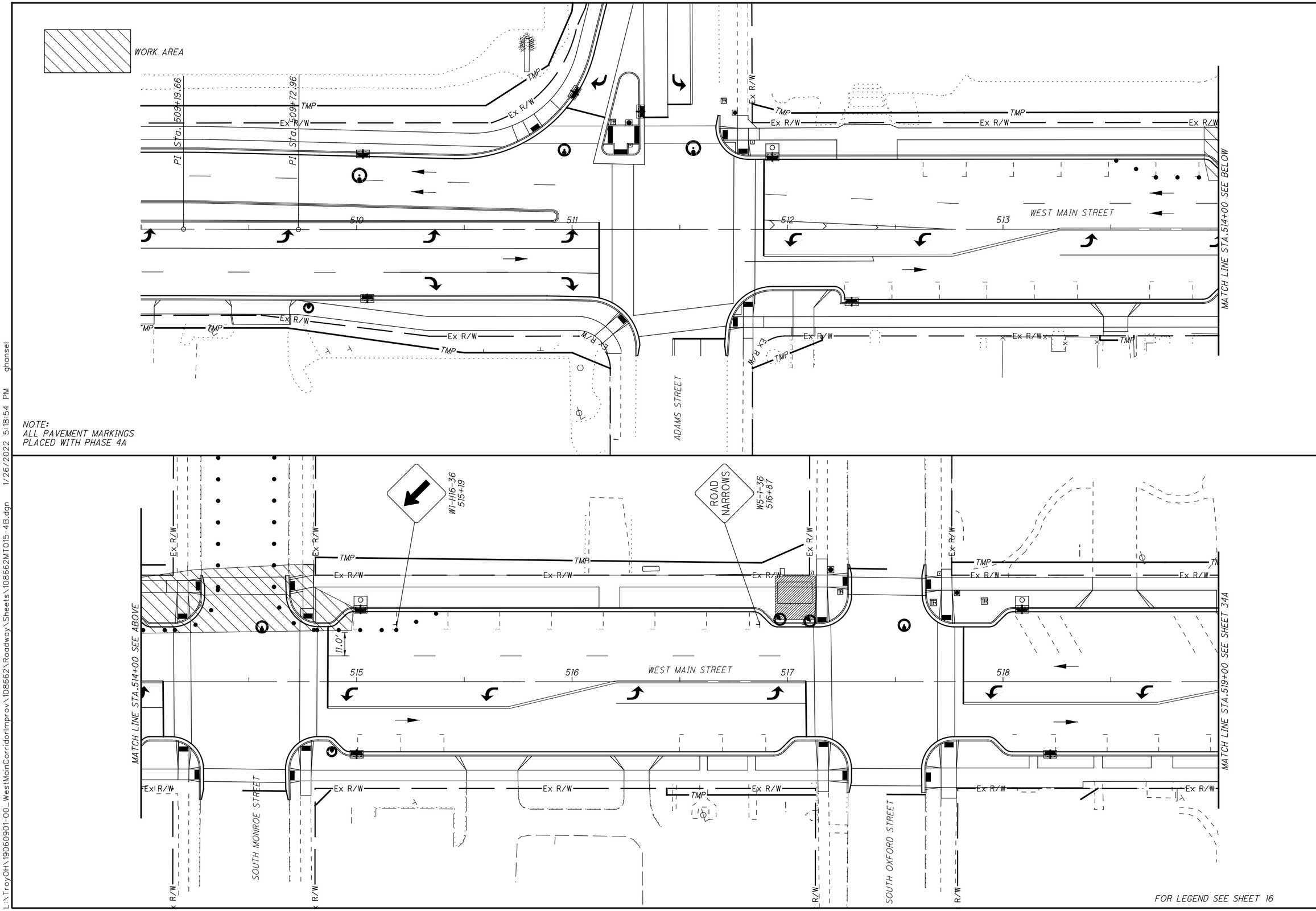

HORIZONTAL SCALE IN FEET
0 10 20 40

CALCULATED LDW
CHECKED JWB

MAINTENANCE OF TRAFFIC PHASE 4B

MIA-41-09.49

L:\TroyOH\19060901-00_WestMainCorridorImprov\108662\Roadway\Sheets\108662MT015-4B.dgn 1/26/2022 5:18:54 PM ghansel

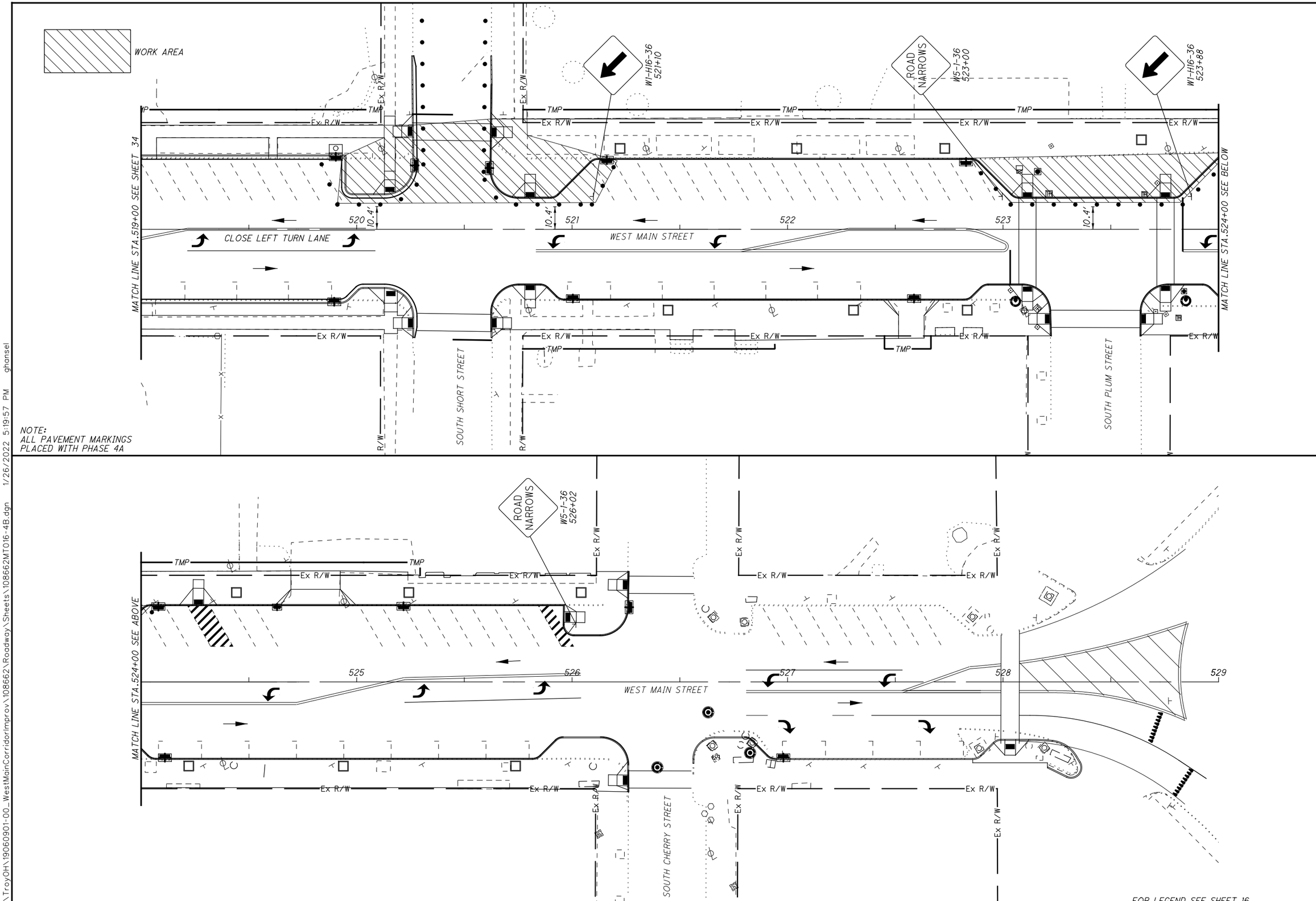

MAINTENANCE OF TRAFFIC PHASE 4B

MIA-41-09.49

L:\TroyOH\19060901-00_WestMainCorridorImprov\108662\Roadway\Sheets\108662MT016-4B.dgn 1/26/2022 5:19:57 PM ghansel

SHEET NUM. 3	8	9	43	44	45	46	103	116	117	129	134A	135	191	192	PART. 01/SAF/OT	02/S>2/PV	ITEM	ITEM EXT	GRAND TOTAL	UNIT	DESCRIPTION	SEE SHEET NO.
																					ROADWAY	
																	201	11000	LS		CLEARING AND GRUBBING	8
			5	2	13										20		201	21800	20	EACH	TREE REMOVED, 18"	
			1		1										2		201	23000	2	EACH	TREE REMOVED, 30"	
			851	1,307	1,506	56		2,211	11						5,942		202	23000	5,942	SY	PAVEMENT REMOVED	
			16,514	9,373	25,187	597									51,671		202	30000	51,671	SF	WALK REMOVED	
			4,057	2,177	2,916	305		190							9,645		202	32000	9,645	FT	CURB REMOVED	
			80	80	186					737					1,083		202	35100	1,083	FT	PIPE REMOVED, 24" AND UNDER	
				345	237										582		202	35200	582	FT	PIPE REMOVED, OVER 24"	
			2												2		SPECIAL	20253010	2	EACH	PARKING BLOCK REMOVED AND RESET	9
			15	13	10	3				2					43		202	58001	43	EACH	MANHOLE REMOVED, AS PER PLAN	10
			11	16	14	4									45		202	58100	45	EACH	CATCH BASIN REMOVED	
				56		45									101		SPECIAL	20270000	101	FT	FILL AND PLUG EXISTING CONDUIT: 8"	10
			96												96		SPECIAL	20270000	96	FT	FILL AND PLUG EXISTING CONDUIT: 10"	10
			316	269	507	177									1,269		SPECIAL	20270000	1,269	FT	FILL AND PLUG EXISTING CONDUIT: 12"	10
			444	30	465	185									1,124		SPECIAL	20270000	1,124	FT	FILL AND PLUG EXISTING CONDUIT: 15"	10
			471	132	292	50									945		SPECIAL	20270000	945	FT	FILL AND PLUG EXISTING CONDUIT: 18"	10
			407			122									529		SPECIAL	20270000	529	FT	FILL AND PLUG EXISTING CONDUIT: 24"	10
											1				1		202	75611	1	EACH	VALVE BOX REMOVED, AS PER PLAN	134A
																	202	98000	LS		REMOVAL MISC.: SPRINKLER SYSTEM REMOVED	10
																	202	98000	LS		REMOVAL MISC.: REMOVE AND RESET STREETSCAPE ITEMS	9
						3									3		202	98100	3	EACH	REMOVAL MISC.: CONCRETE PLANTER BOX REMOVED	9
					5										5		202	98100	5	EACH	REMOVAL MISC.: TREE WELL REMOVED	9
			2												2		202	98100	2	EACH	REMOVAL MISC.: REMOVE AND RESET LANDSCAPING ROCK	9
											10				10		202	98100	10	EACH	REMOVAL MISC.: SERVICE BOX REMOVED	134A
					90	300									390		202	98400	390	SF	REMOVAL MISC.: PAVER WALKWAY REMOVED	9
							3,898								3,898		203	10000	3,898	CY	EXCAVATION	
							839								839		203	20000	839	CY	EMBANKMENT	
8,676								1,734	10						10,420		204	10000	10,420	SY	SUBGRADE COMPACTION	
	2,824														2,824		204	13000	2,824	CY	EXCAVATION OF SUBGRADE	
	2,824														2,824		204	30010	2,824	CY	GRANULAR MATERIAL, TYPE B	
	20														20		204	45000	20	HOUR	PROOF ROLLING	
	8,472														8,472		204	50000	8,472	SY	GEOTEXTILE FABRIC	
			15,003	9,005	20,063	724									44,795		608	12000	44,795	SF	5" CONCRETE WALK	
				14											14		608	41000	14	FT	CONCRETE STEPS, TYPE B	
			1,289	944	2,307										4,540		608	52000	4,540	SF	CURB RAMP	
			163	503											666		608	52001	666	SF	CURB RAMP, AS PER PLAN: 9" CONCRETE	9
					576	66									642		608	52001	642	SF	CURB RAMP, AS PER PLAN: PAVER CURB RAMP	9
			32	44											76		608	53020	76	SF	DETECTABLE WARNING	
					6,840	343									7,183		608	98000	7,183	SF	WALKWAY, MISC.: PAVER SYSTEM	9
		50													50		608	98000	50	SF	WALKWAY, MISC.: PAVER RESTORATION	9
													5	2	7		623	38500	7	EACH	MONUMENT ASSEMBLY	
													7	4	11		623	40500	11	EACH	REFERENCE MONUMENT	
																	SPECIAL	69098400	LS		SUBSURFACE FILLING OF 107 W. MAIN STREET	9
																					EROSION CONTROL	
	2														2		659	00100	2	EACH	SOIL ANALYSIS TEST	
	652														652		659	00300	652	CY	TOPSOIL	
	5,869														5,869		659	10000	5,869	SY	SEEDING AND MULCHING	
	294														294		659	14000	294	SY	REPAIR SEEDING AND MULCHING	
	294														294		659	15000	294	SY	INTER-SEEDING	
	0.8														0.8		659	20000	0.8	TON	COMMERCIAL FERTILIZER	
	1.21														1.21		659	31000	1.21	ACRE	LIME	
	16														16		659	35000	16	MGAL	WATER	
	14														14		659	40000	14	MSF	MOWING	
																	832	15000	LS		STORM WATER POLLUTION PREVENTION PLAN	
																	832	15002	LS		STORM WATER POLLUTION PREVENTION INSPECTIONS	
																	832	15010	LS		STORM WATER POLLUTION PREVENTION INSPECTION SOFTWARE	
															125,000		832	30000	125,000	EACH	EROSION CONTROL	

CALCULATED ATW
CHECKED JDH

GENERAL SUMMARY

MIA-41-09.49

S:\CIN\4300--4399\4354\004\Drawings\CAD\108662\roadway\sheets\08662GG001.dgn Sheet 2/2/2022 11:35:07 AM Allisonw

SHEET NUM. 3	9	10	10A	116	117	119	120	134A	135	PART. 01/SAF/OT	02/S>2/PV	ALT (X)	ITEM	ITEM EXT	GRAND TOTAL	UNIT	DESCRIPTION	SEE SHEET NO.
																	ENVIRONMENTAL / REMEDIATION	
			5							5			202	67000	5	EACH	REGULATED UNDERGROUND STORAGE TANK REMOVED	10A
			50							50			SPECIAL	69065016	50	TON	WORK INVOLVING PETROLEUM CONTAMINATED SOIL	10A
			1,000							1,000			SPECIAL	69065024	1,000	GAL	WORK INVOLVING REGULATED WATER	10A
			3							3			SPECIAL	69065300	3	EACH	GROUND WATER MONITORING WELL ABANDONMENT	10A
																	DRAINAGE	
	100									100			602	97000	100	SF	MASONRY, MISC.: BLOCK WALL, 8" MIN.	9
							10,564			10,564			605	14000	10,564	FT	6" BASE PIPE UNDERDRAINS	
							530			530			611	04401	530	FT	12" CONDUIT, TYPE B, AS PER PLAN	10
						48				48			611	98151	48	EACH	CATCH BASIN, NO. 3, AS PER PLAN	10
						4				4			611	98151	4	EACH	CATCH BASIN, NO. 3, AS PER PLAN (CB-3 MODIFIED)	10
						5				5			611	98370	5	EACH	CATCH BASIN, NO. 6	
									1	1			611	98630	1	EACH	CATCH BASIN ADJUSTED TO GRADE	
						40				40			611	99574	40	EACH	MANHOLE, NO. 3	
									33	33			611	99654	33	EACH	MANHOLE ADJUSTED TO GRADE	
									2	2			611	99660	2	EACH	MANHOLE RECONSTRUCTED TO GRADE	
	71									71			613	41200	71	CY	LOW STRENGTH MORTAR BACKFILL	
						1				1			895	10040	1	EACH	MANUFACTURED WATER QUALITY STRUCTURE, TYPE 4, AS PER PLAN	10
																	DRAINAGE ALTERNATES	
							1,547			1,547		X	611	04400	1,547	FT	12" CONDUIT, TYPE B (ALTERNATE 1)	
							1,547			1,547		X	611	97400	1,547	FT	CONDUIT, MISC.: 12" CONDUIT, TYPE B (ALTERNATE 2)	10
							718			718		X	611	05900	718	FT	15" CONDUIT, TYPE B (ALTERNATE 1)	
							718			718		X	611	97400	718	FT	CONDUIT, MISC.: 15" CONDUIT, TYPE B (ALTERNATE 2)	10
							514			514		X	611	07400	514	FT	18" CONDUIT, TYPE B (ALTERNATE 1)	
							514			514		X	611	97400	514	FT	CONDUIT, MISC.: 18" CONDUIT, TYPE B (ALTERNATE 2)	10
							679			679		X	611	10400	679	FT	24" CONDUIT, TYPE B (ALTERNATE 1)	
							679			679		X	611	97400	679	FT	CONDUIT, MISC.: 24" CONDUIT, TYPE B (ALTERNATE 2)	10
							873			873		X	611	13400	873	FT	30" CONDUIT, TYPE B (ALTERNATE 1)	
							873			873		X	611	97400	873	FT	CONDUIT, MISC.: 30" CONDUIT, TYPE B (ALTERNATE 2)	10
							1,356			1,356		X	611	16400	1,356	FT	36" CONDUIT, TYPE B (ALTERNATE 1)	
							1,356			1,356		X	611	97400	1,356	FT	CONDUIT, MISC.: 36" CONDUIT, TYPE B (ALTERNATE 2)	10
							131			131		X	611	19400	131	FT	42" CONDUIT, TYPE B (ALTERNATE 1)	
							131			131		X	611	97400	131	FT	CONDUIT, MISC.: 42" CONDUIT, TYPE B (ALTERNATE 2)	10
							38			38		X	611	20900	38	FT	48" CONDUIT, TYPE B (ALTERNATE 1)	
							38			38		X	611	97400	38	FT	CONDUIT, MISC.: 48" CONDUIT, TYPE B (ALTERNATE 2)	10
																	PAVEMENT	
11,795										11,795			252	01500	11,795	FT	FULL DEPTH PAVEMENT SAWING	
31,545											31,545		254	01000	31,545	SY	PAVEMENT PLANING, ASPHALT CONCRETE, 0.25" TO 6"	
1,250		1,540		61	1					2,852			301	46000	2,852	CY	ASPHALT CONCRETE BASE, PG64-22	
1,889				304	2					2,195			304	20000	2,195	CY	AGGREGATE BASE	
4,608				464	1					5,073			407	10000	5,073	GAL	TACK COAT	
7,712										7,712			422	11000	7,712	SY	AGGREGATE, SINGLE CHIP SEAL, TYPE A	
1,264											1,264		441	50000	1,264	CY	ASPHALT CONCRETE SURFACE COURSE, TYPE 1, (448), PG64-22	
1,768											1,768		441	50300	1,768	CY	ASPHALT CONCRETE INTERMEDIATE COURSE, TYPE 2, (448)	
				15	1					16			441	50400	16	CY	ASPHALT CONCRETE SURFACE COURSE, TYPE 1, (448), (DRIVEWAYS)	
				20						20			441	50600	20	CY	ASPHALT CONCRETE INTERMEDIATE COURSE, TYPE 2, (448), (DRIVEWAYS)	
37										37			452	09010	37	SY	4" NON-REINFORCED CONCRETE PAVEMENT, CLASS QC 1P	
				100						100			452	10010	100	SY	6" NON-REINFORCED CONCRETE PAVEMENT, CLASS QC 1P	
				43						43			452	10050	43	SY	6" NON-REINFORCED CONCRETE PAVEMENT, CLASS QC MS	10
				806						806			452	12010	806	SY	8" NON-REINFORCED CONCRETE PAVEMENT, CLASS QC 1P	
				346						346			452	12050	346	SY	8" NON-REINFORCED CONCRETE PAVEMENT, CLASS QC MS	
84										84			452	13010	84	SY	9" NON-REINFORCED CONCRETE PAVEMENT, CLASS QC 1P	
8,292										8,292			609	12001	8,292	FT	COMBINATION CURB AND GUTTER, TYPE 2, AS PER PLAN	8
196										196			609	18001	196	FT	COMBINATION CURB AND GUTTER, TYPE 3, AS PER PLAN	8
2,525				242						2,767			609	26001	2,767	FT	CURB, TYPE 6, AS PER PLAN	8
218										218			609	98000	218	FT	CURB, MISC.: STREETSCAPE CURB	8

CALCULATED ATW
CHECKED JDH

GENERAL SUMMARY

MIA-41-09.49

S:\CIN\4300--4399\4354\004\Drawings\CAD\108662\roadway\sheets\08662GG002.dgn Sheet 2/2/2022 11:35:07 AM Allisonw

SHEET NUM.										PART.		ALT	ITEM	ITEM	GRAND	UNIT	DESCRIPTION	SEE SHEET NO.
10	10A	11	12	43	44	129	134A	135	187	01/SAF/OT	02/S>2/PV	(X)		EXT	TOTAL			
																	WATER WORK	
							185			185			638	00601	185	FT	6" WATER MAIN DUCTILE IRON PIPE ANSI CLASS 52, PUSH-ON JOINTS AND FITTINGS, AS PER PLAN	134A
							38			38			638	02401	38	FT	12" WATERMAIN DUCTILE IRON PIPE ANSI CLASS 52, PUSH-ON JOINTS AND FITTINGS, AS PER PLAN	134A
							2			2			638	07801	2	EACH	6" GATE VALVE AND VALVE BOX, AS PER PLAN	134A
							6			6			638	10300	6	EACH	FIRE HYDRANT EXTENDED AND ADJUSTED TO GRADE	
							3			3			638	10480	3	EACH	FIRE HYDRANT REMOVED	
								14		14			638	10800	14	EACH	VALVE BOX ADJUSTED TO GRADE	
							15			15			638	11101	15	EACH	METER AND CHAMBER REMOVED AND RESET, AS PER PLAN	
							1			1			638	11201	1	EACH	METER, SETTING, STOP AND CHAMBER, AS PER PLAN	134A
							3			3			SPECIAL	63820750	3	EACH	6" FIRE HYDRANT, CITY OF TROY STANDARDS	134A
							6			6			SPECIAL	63820904	6	EACH	SERVICE BOX, CITY OF TROY STANDARDS	134A
							6			6			638	98000	6	EACH	WATER WORK, MISC.: CORPORATION STOP	134A
								11		11			638	98000	11	EACH	WATER WORK, MISC.: WATER MANHOLE ADJUSTED TO GRADE	10
							526			526			638	98600	526	FT	WATER WORK, MISC.: COPPER WATER SERVICE LINE	134A
																	SANITARY SEWER	
50						50				100			611	00901	100	FT	6" CONDUIT, TYPE B, AS PER PLAN	129
						230				230			611	03101	230	FT	10" CONDUIT, TYPE B, AS PER PLAN	129
						303				303			611	04401	303	FT	12" CONDUIT, TYPE B, AS PER PLAN	129
						204				204			611	05901	204	FT	15" CONDUIT, TYPE B, AS PER PLAN	129
													611	97300	LS		CONDUIT, MISC.: VIDEO INSPECTION OF SANITARY LATERALS	10
						1				1			611	99575	1	EACH	MANHOLE, NO. 3, AS PER PLAN	129
						5				5			611	99690	5	EACH	MANHOLE, MISC.:CONNECT TO EXISTING SANITARY	129
																	LIGHTING	
									61	61			625	00450	61	EACH	CONNECTION, FUSED PULL APART	
									7	7			625	00460	7	EACH	CONNECTION, UNFUSED PULL APART	
									7	7			625	10481	7	EACH	LIGHT POLE, DECORATIVE, AS PER PLAN	187
									16	16			625	10490	16	EACH	LIGHT POLE, CONVENTIONAL	
									16	16			625	14501	16	EACH	LIGHT POLE FOUNDATION, AS PER PLAN	187
									21	21			625	18000	21	EACH	BRACKET ARM, 10'	
									2,295	2,295			625	23100	2,295	FT	NO. 2 AWG 600 VOLT DISTRIBUTION CABLE	
									5,520	5,520			625	23304	5,520	FT	NO. 8 AWG 600 VOLT DISTRIBUTION CABLE	
									17,385	17,385			625	23306	17,385	FT	NO. 10 AWG 600 VOLT DISTRIBUTION CABLE	
									2,856	2,856			625	23400	2,856	FT	NO. 10 AWG POLE AND BRACKET CABLE	
									9,575	9,575			625	25408	9,575	FT	CONDUIT, 2", 725.051	
									750	750			625	25900	750	FT	CONDUIT, JACKED OR DRILLED, 2"	
									20	20			625	26252	20	EACH	LUMINAIRE, CONVENTIONAL, SOLID STATE (LED), 194W, TYPE III, 240V	
									9	9			625	27551	9	EACH	LUMINAIRE, DECORATIVE, AS PER PLAN	187
									9,575	9,575			625	29002	9,575	FT	TRENCH, 24" DEEP	
									25	25			625	30500	25	EACH	PULL BOX, 725.06, SIZE 1.5	
									21	21			625	32000	21	EACH	GROUND ROD	
									2	2			625	34000	2	EACH	POWER SERVICE	
								24	30	54			625	75401	54	EACH	LIGHT POLE REMOVED, AS PER PLAN	187
									30	30			625	75501	30	EACH	LIGHT POLE FOUNDATION REMOVED, AS PER PLAN	187
									30	30			625	75507	30	EACH	LUMINAIRE REMOVED, AS PER PLAN	187
									5,360	5,360			625	75550	5,360	FT	DISTRIBUTION CABLE REMOVED	
									6	6			625	75800	6	EACH	DISCONNECT CIRCUIT	
									13	13			625	98000	13	EACH	LIGHTING, MISC.: DUPLEX 20A NEMA 5-20R SELF TEST GFCI TYPE WITH IN-USE COVER	187
									5	5			632	89300	5	EACH	WOOD POLE	
																	OTHER UTILITIES	
								7		7			611	99690	7	EACH	MANHOLE, MISC.: TELE MANHOLE ADJUSTED TO GRADE	10
								4		4			611	99690	4	EACH	MANHOLE, MISC.: PULLBOX ADJUSTED TO GRADE	10
								1		1			611	99690	1	EACH	MANHOLE, MISC.: SPRINKLER CONTROL ADJUSTED TO GRADE	10
								39		39			SPECIAL	61199700	39	EACH	GAS VALVE BOX ADJUSTED TO GRADE	10
										887			630	03100	887	FT	GROUND MOUNTED SUPPORT, NO. 3 POST	
										40			630	08302	40	FT	GROUND MOUNTED WOODEN BOX BEAM SUPPORT, TYPE M BEAM	
										2			630	08600	2	EACH	SIGN POST REFLECTOR	
										2			630	79500	2	EACH	SIGN SUPPORT ASSEMBLY, POLE MOUNTED	

CALCULATED ATW
CHECKED JDH

GENERAL SUMMARY

MIA-41-09.49

S:\CIN\4300--4399\4354\004\Drawings\CAD\108662\roadway\sheets\08662GG003.dgn Sheet 2/2/2022 11:35:07 AM Allisonw

SHEET NUM.											PART.		ITEM	ITEM EXT	GRAND TOTAL	UNIT	DESCRIPTION	SEE SHEET NO.
136	137	138	139	140	141	160	165	170	175	180	01/SAF/OT	02/S>2/PV						
				260	121						381		630	80100	381	SF	SIGN, FLAT SHEET	
			55								55		630	84900	55	EACH	REMOVAL OF GROUND MOUNTED SIGN AND DISPOSAL	
			3	4							7		630	85100	7	EACH	REMOVAL OF GROUND MOUNTED SIGN AND REERECTION	
			48								48		630	86002	48	EACH	REMOVAL OF GROUND MOUNTED POST SUPPORT AND DISPOSAL	
			2								2		630	87400	2	EACH	REMOVAL OF OVERHEAD MOUNTED SIGN AND DISPOSAL	
			20								20		630	87500	20	EACH	REMOVAL OF POLE MOUNTED SIGN AND DISPOSAL	
			1	1							2		630	87520	2	EACH	REMOVAL OF POLE MOUNTED SIGN AND REERECTION	
0.26											0.26		644	00100	0.26	MILE	EDGE LINE, 4"	
0.99											0.99		644	00200	0.99	MILE	LANE LINE, 4"	
1.1											1.1		644	00300	1.1	MILE	CENTER LINE	
3,960											3,960		644	00400	3,960	FT	CHANNELIZING LINE, 8"	
476	136										612		644	00500	612	FT	STOP LINE	
	3,021										3,021		644	00600	3,021	FT	CROSSWALK LINE	
	213										213		644	00700	213	FT	TRANSVERSE/DIAGONAL LINE	
	72										72		644	00720	72	FT	CHEVRON MARKING	
	4										4		644	01000	4	EACH	RAILROAD SYMBOL MARKING	
	1,846										1,846		644	01200	1,846	FT	PARKING LOT STALL MARKING	
	45	24									69		644	01300	69	EACH	LANE ARROW	
		503									503		644	01500	503	FT	DOTTED LINE, 4"	
		3									3		644	01600	3	EACH	HANDICAP SYMBOL MARKING	
		31									31		644	20800	31	FT	YIELD LINE	
																	TRAFFIC SIGNALS	
						2	3	4	1	2	12		625	00450	12	EACH	CONNECTION, FUSED PULL APART	
						2	3	4	1	2	12		625	00460	12	EACH	CONNECTION, UNFUSED PULL APART	
							1	2			3		625	10490	3	EACH	LIGHT POLE, CONVENTIONAL	
							1	2			3		625	14000	3	EACH	LIGHT POLE FOUNDATION, 24" X 6' DEEP	
						2	4	6	1		13		625	18000	13	EACH	BRACKET ARM, 10'	
						1,000	2,600	3,210	200	570	7,580		625	23306	7,580	FT	NO. 10 AWG 600 VOLT DISTRIBUTION CABLE	
						300	200	650	50	65	1,265		625	23400	1,265	FT	NO. 10 AWG POLE AND BRACKET CABLE	
						121	193	415	111	587	1,427		625	25402	1,427	FT	CONDUIT, 2", 725.05	
								15			15		625	25403	15	FT	CONDUIT, 2", 725.05, AS PER PLAN	153
						56	66	64	82	126	394		625	25502	394	FT	CONDUIT, 3", 725.05	
						92		58			150		625	25902	150	FT	CONDUIT, JACKED OR DRILLED, 725.04, 3"	
						196	279	170	179	117	941		625	25902	941	FT	CONDUIT, JACKED OR DRILLED, 725.04, 4"	
						2	4	6	1		13		625	26252	13	EACH	LUMINAIRE, CONVENTIONAL, SOLID STATE (LED), 194W, TYPE III, 240V	
										2	2		625	27551	2	EACH	LUMINAIRE, DECORATIVE, AS PER PLAN	153
						163	245	474	181	694	1,757		625	29000	1,757	FT	TRENCH	
						1	4	3	3	2	13		625	30700	13	EACH	PULL BOX, 725.08, 18"	
						3	3	2	2	2	12		625	30706	12	EACH	PULL BOX, 725.08, 24"	
								1			1		625	31510	1	EACH	PULL BOX REMOVED	
						9	10	11	9	7	46		625	32000	46	EACH	GROUND ROD	
						163	245	474	181	694	1,757		625	36010	1,757	FT	UNDERGROUND WARNING/MARKING TAPE	
							1	2			3		625	98000	3	EACH	LIGHTING, MISC.:DUPLEX 20A NEMA 5-20R SELF TEST GFCI TYPE WITH IN-USE COVER	187
						8	12	11	6	4	41		630	79101	41	EACH	SIGN HANGER ASSEMBLY, MAST ARM, AS PER PLAN	153
						30	53	49	15	8	155		630	80100	155	SF	SIGN, FLAT SHEET	
							2				2		630	80501	2	EACH	SIGN, DOUBLE FACED, STREET NAME, AS PER PLAN	153
						4	4	4	4	3	19		630	80510	19	EACH	SIGN, STREET NAME	
						9	9	9	8	6	41		632	05007	41	EACH	VEHICULAR SIGNAL HEAD, (LED), 3-SECTION, 12" LENS, 1-WAY, POLYCARBONATE, AS PER PLAN,	154
																	BLACK, WITH BACKPLATE	
						1	1	3			5		632	05087	5	EACH	VEHICULAR SIGNAL HEAD, (LED), 5-SECTION, 12" LENS, 1-WAY, POLYCARBONATE, AS PER PLAN,	154
																	BLACK, WITH BACKPLATE	
						8	8	8	8	6	38		632	20731	38	EACH	PEDESTRIAN SIGNAL HEAD (LED), TYPE D2, COUNTDOWN, AS PER PLAN	154
						10	10	12	8	6	46		632	25000	46	EACH	COVERING OF VEHICULAR SIGNAL HEAD	
						8	8	8	8	6	38		632	25010	38	EACH	COVERING OF PEDESTRIAN SIGNAL HEAD	
						8	8	8	8	6	38		632	26000	38	EACH	PEDESTRIAN PUSHBUTTON	
						1,200	890	1,080	1,070		4,240		632	40300	4,240	FT	SIGNAL CABLE, 3 CONDUCTOR, NO. 14 AWG	
						1,000	1,020	800	750	460	4,030		632	40500	4,030	FT	SIGNAL CABLE, 5 CONDUCTOR, NO. 14 AWG	
						1,350	1,520	1,180	530	760	5,340		632	40700	5,340	FT	SIGNAL CABLE, 7 CONDUCTOR, NO. 14 AWG	
						4	4	4	4	2	18		632	64010	18	EACH	SIGNAL SUPPORT FOUNDATION	

CALCULATED ATW
CHECKED JDH

GENERAL SUMMARY

MIA-41-09.49

S:\CIN\4300--4399\4354\004\Drawings\CAD\108662\roadway\sheets\08662GG004.dgn Sheet 2/2/2022 11:35:08 AM Allisonw

SHEET NUM. 10	10A	11	12	155	160	165	170	175	180	189	PART. 01/SAF/OT	02/S>2/PV	ALT (X)	ITEM	ITEM EXT	GRAND TOTAL	UNIT	DESCRIPTION	SEE SHEET NO.
					5	4	4	4	4		21			632	64020	21	EACH	PEDESTAL FOUNDATION	
					70	50	60	80	70		330			632	68300	330	FT	POWER CABLE, 3 CONDUCTOR, NO. 6 AWG	
					80	320	520	210	450		1,580			632	69700	1,580	FT	SERVICE CABLE, 3 CONDUCTOR, NO. 8 AWG	
					1	1	1	1	1		5			632	70001	5	EACH	POWER SERVICE, AS PER PLAN	154
								1	1		2			632	70400	2	EACH	CONDUIT RISER, 2" DIAMETER	
								2			2			632	72101	2	EACH	SIGNAL SUPPORT, TYPE TC-81.22, DESIGN 2, AS PER PLAN	153
					1		1				2			632	72131	2	EACH	SIGNAL SUPPORT, TYPE TC-81.22, DESIGN 12, AS PER PLAN	153
						1	1	1			3			632	72141	3	EACH	SIGNAL SUPPORT, TYPE TC-81.22, DESIGN 13, AS PER PLAN	153
						1					1			632	72151	1	EACH	SIGNAL SUPPORT, TYPE TC-81.22, DESIGN 14, AS PER PLAN	153
					1						1			632	78349	1	EACH	COMBINATION SIGNAL SUPPORT, TYPE TC-12.31 DESIGN 10 POLE,	153
																		WITH MAST ARMS TC-81.22 DESIGN 12 AND DESIGN 12, AS PER PLAN	
							1	1			2			632	79101	2	EACH	COMBINATION SIGNAL SUPPORT, TYPE TC-81.22, DESIGN 2, AS PER PLAN	153
						1					1			632	79111	1	EACH	COMBINATION SIGNAL SUPPORT, TYPE TC-81.22, DESIGN 4, AS PER PLAN	153
					1	1	1				3			632	79131	3	EACH	COMBINATION SIGNAL SUPPORT, TYPE TC-81.22, DESIGN 12, AS PER PLAN	153
					2	9	3	4			18			632	89803	18	EACH	PEDESTAL, 5', TRANSFORMER BASE, AS PER PLAN	153
					3	1	1		4		9			632	89905	9	EACH	PEDESTAL, 10', TRANSFORMER BASE, AS PER PLAN	153
20											20			632	90020	20	EACH	REMOVAL OF MISCELLANEOUS TRAFFIC SIGNAL ITEM	154
1					1	1	1	1	1		6			632	90100	6	EACH	REMOVAL OF TRAFFIC SIGNAL INSTALLATION	
					1	1	1	1	1		5			633	67100	5	EACH	CABINET FOUNDATION	
					1	1		1	1		4			633	67200	4	EACH	CONTROLLER WORK PAD	
					1	1	1	1	1		5			633	75001	5	EACH	UNINTERRUPTIBLE POWER SUPPLY (UPS), 1000 WATT, AS PER PLAN	154
				1							1			633	99000	1	EACH	CONTROLLER ITEM, MISC.: TRAFFIC MANAGEMENT CENTER, AS PER PLAN	155
					1	1	1	1			4			633	99000	4	EACH	CONTROLLER ITEM, MISC.: CABINET, TYPE TS-1, AS PER PLAN	154
									1		1			633	99000	1	EACH	CONTROLLER ITEM, MISC.: CABINET, TYPE TS-1, AS PER PLAN (PLUM ST)	154
					1	1	1	1	1		5			633	99000	5	EACH	CONTROLLER ITEM, MISC.: 10/100/1000 ETHERNET SWITCH, AS PER PLAN	155
					1						1			809	69000	1	EACH	ADVANCE RADAR DETECTION	
					1	1	1	1	1		5			809	69123	5	EACH	ATC V6.24 CONTROLLER, AS PER PLAN	154
														824	00010	LS		SYSTEM ANALYSIS	180A
																		TRAFFIC SIGNALS ALTERNATES	
									1		1			632	78241	1	EACH	COMBINATION SIGNAL SUPPORT, TYPE TC-12.31 DESIGN 6 POLE, WITH MAST ARMS TC-81.22	154
																		DESIGN 12 AND DESIGN 2, AS PER PLAN (ALTERNATE BID A)	
									1		1			632	79101	1	EACH	COMBINATION SIGNAL SUPPORT, TYPE TC-81.22, DESIGN 2, AS PER PLAN (ALTERNATE BID A)	154
									1		1			632	78241	1	EACH	COMBINATION SIGNAL SUPPORT, TYPE TC-12.31 DESIGN 6 POLE, WITH MAST ARMS TC-81.22	154
																		DESIGN 12 AND DESIGN 2, AS PER PLAN (ALTERNATE BID B)	
									1		1			632	79101	1	EACH	COMBINATION SIGNAL SUPPORT, TYPE TC-81.22, DESIGN 2, AS PER PLAN (ALTERNATE BID B)	154
					1	1	1	1	1		5		X	816	30001	5	EACH	VIDEO DETECTION SYSTEM, AS PER PLAN (ALTERNATE BID A)	154
					1	1	1	1	1		5		X	816	30001	5	EACH	VIDEO DETECTION SYSTEM, AS PER PLAN (ALTERNATE BID B)	155
																		LANDSCAPING	
	18										18			661	00500	18	CY	MULCH	
										13	13			661	99900	13	EACH	PLANTING, MISC.: TREE WELL	189
	34										34			661	99900	34	EACH	PLANTING, MISC.: LANDSCAPING SHRUB	10A
										21	21			661	99900	21	EACH	PLANTING, MISC.: LANDSCAPING TREE	189
																		MAINTENANCE OF TRAFFIC	
			84								84			614	11110	84	HOUR	LAW ENFORCEMENT OFFICER WITH PATROL CAR FOR ASSISTANCE	
			50								50			614	13000	50	CY	ASPHALT CONCRETE FOR MAINTAINING TRAFFIC	
		2.85									2.85			614	20100	2.85	MILE	WORK ZONE LANE LINE, CLASS I, 4", 642 PAINT	
			1								1			614	20550	1	MILE	WORK ZONE LANE LINE, CLASS III, 4", 642 PAINT	
		3.45									3.45			614	21100	3.45	MILE	WORK ZONE CENTER LINE, CLASS I, 642 PAINT	
			1.1								1.1			614	21550	1.1	MILE	WORK ZONE CENTER LINE, CLASS III, 642 PAINT	
		2									2			614	22200	2	MILE	WORK ZONE EDGE LINE, CLASS I, 4", 740.06, TYPE I	
			0.3								0.3			614	22350	0.3	MILE	WORK ZONE EDGE LINE, CLASS III, 4", 642 PAINT	
		7,940									7,940			614	23200	7,940	FT	WORK ZONE CHANNELIZING LINE, CLASS I, 8", 642 PAINT	
			3,570								3,570			614	23680	3,570	FT	WORK ZONE CHANNELIZING LINE, CLASS III, 8", 642 PAINT	
		817									817			614	24200	817	FT	WORK ZONE DOTTED LINE, CLASS I, 4", 642 PAINT	
			575								575			614	24610	575	FT	WORK ZONE DOTTED LINE, CLASS III, 4", 642 PAINT	
		289									289			614	25200	289	FT	WORK ZONE TRANSVERSE/DIAGONAL LINE, CLASS I, 642 PAINT	
			225								225			614	25620	225	FT	WORK ZONE TRANSVERSE/DIAGONAL LINE, CLASS III, 642 PAINT	
		1,697									1,697			614	26200	1,697	FT	WORK ZONE STOP LINE, CLASS I, 642 PAINT	
		4,931									4,931			614	27200	4,931	FT	WORK ZONE CROSSWALK LINE, CLASS I, 642 PAINT	

CALCULATED ATW
CHECKED JDH

GENERAL SUMMARY

MIA-41-09.49

S:\CIN\4300--4399\4354\004\Drawings\CAD\108662\roadway\sheets\08662GG005.dgn Sheet 2/2/2022 5:06:51 PM Allisonw

SHEET NUM.								PART.		ALT	ITEM	ITEM	GRAND	UNIT	DESCRIPTION	SEE SHEET NO.
8	9	10	10A	11	12	191	192	01/SAF/OT	02/S>2/PV	(X)		EXT	TOTAL			
					3,025			3,025			614	27620	3,025	FT	WORK ZONE CROSSWALK LINE, CLASS III, 642 PAINT	
					675			675			614	26610	675	FT	WORK ZONE STOP LINE, CLASS III, 642 PAINT	
				130				130			614	30200	130	EACH	WORK ZONE ARROW, CLASS I, 642 PAINT	
					62			62			614	30650	62	EACH	WORK ZONE ARROW, CLASS III, 642 PAINT	
				3				3			614	32200	3	EACH	WORK ZONE RAILROAD SYMBOL MARKING, CLASS I, 642 PAINT	
					4			4			614	32210	4	EACH	WORK ZONE RAILROAD SYMBOL MARKING, CLASS III, 642 PAINT	
					5			5			614	40050	5	EACH	BUSINESS ENTRANCE SIGN	
					2,150			2,150			614	98100	2,150	FT	WORK ZONE PAVEMENT MARKING, MISC.: PARKING LOT STALL MARKING, CLASS I, 642 PAINT	12
					30			30			616	10000	30	MGAL	WATER	
															INCIDENTALS	
											614	11000	LS		MAINTAINING TRAFFIC	
								12			619	16020	12	MNTH	FIELD OFFICE, TYPE C	
											623	10000	LS		CONSTRUCTION LAYOUT STAKES AND SURVEYING	
											624	10000	LS		MOBILIZATION	

CALCULATED ATW
CHECKED JDH

GENERAL SUMMARY

MIA-41-09.49

S:\CIN\4300--4399\4354\004\Drawings\CAD\108662\roadway\sheets\08662GG006.dgn Sheet 2/2/2022 5:04:23 PM Allisonw

PROJECT DESCRIPTION
WIDENING OF SR 41 (W. MAIN ST.) TO INCLUDE AT LEAST ONE 12' THROUGH LANE IN EACH DIRECTION, RECONSTRUCTING THE SIDEWALK AND CURB LAWN ALONG THE CORRIDOR, UPSIZING A WATER MAIN ALONG A PORTION OF WEST MAIN STREET AND IMPROVING THE STORMWATER SYSTEM ALONG THE CORRIDOR FOR A LENGTH OF 0.88 MILES.

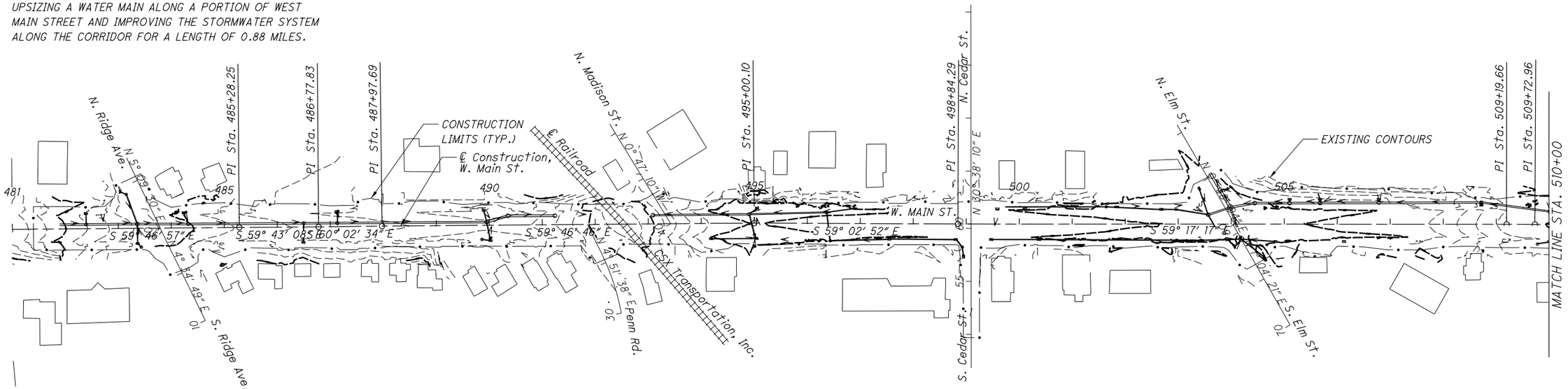

PROJECT DATA			
TOTAL AREA (RIGHT-OF-WAY)	9.6 AC	RUNOFF COEFFICIENT FOR PRE-CONSTRUCTION SITE	0.76
PROJECT EARTH DISTURBED AREA	4.4 AC	RUNOFF COEFFICIENT FOR POST-CONSTRUCTION SITE	0.79
ESTIMATED CONTRACTOR EARTH DISTURBED AREA	2.0 AC	POST CONSTRUCTION BMP:	TYPE 4 MANUFACTURED SYSTEM
NOTICE OF INTENT EARTH DISTURBED AREA	6.4 AC	IMMEDIATE RECEIVING WATERS	GREAT MIAMI RIVER
IMPERVIOUS (PAVED) AREA FOR PRE-CONSTRUCTION SITE	7.8 AC	SUBSEQUENT RECEIVING WATERS	GREAT MIAMI RIVER
IMPERVIOUS (PAVED) AREA FOR POST CONSTRUCTION SITE	8.4 AC		

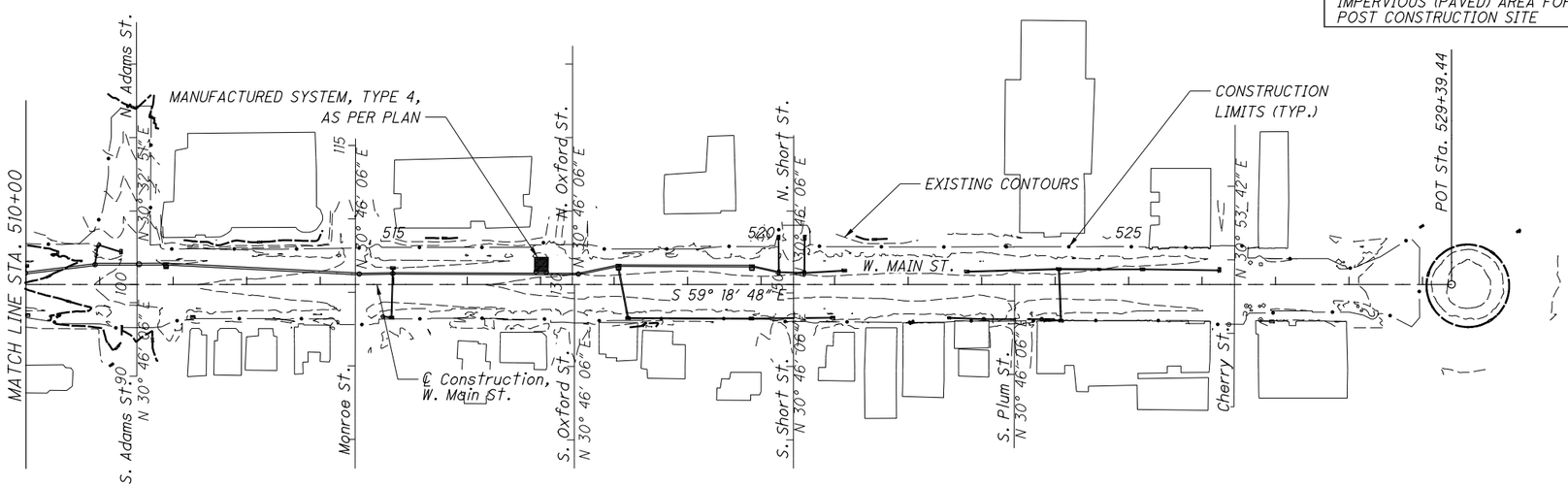

LEGEND

- PROPOSED CATCH BASIN
- PROPSED STORM MANHOLE
- PROPOSED MANUFACTURED SYSTEM TYPE 4, AS PER PLAN
- PROPOSED STORM SEWER

USGS MAP: TROY QUADRANGLE
TROY, OHIO

LATITUDE: 40°02'45"*

LONGITUDE: 84°13'03"*

*APPROXIMATE CENTER OF PROJECT

BMP TYPE	LATITUDE	LONGITUDE	EDA TREATMENT CREDIT (ACRES)	REQUIRED TREATMENT AREA (ACRES)
MANUFACTURED SYSTEM TYPE 4 (MS4)	40.041350	84.207305	0.98	0.88

HORIZONTAL SCALE IN FEET
0 50 100 200

PROJECT SITE PLAN

MIA-41-09.49

S:\CIN\4300--4399\4354\004\Drawings\CAD\108662\drainage\sheets\08662DE001.dgn Sheet 2/2/2022 11:35:10 AM Allisonw

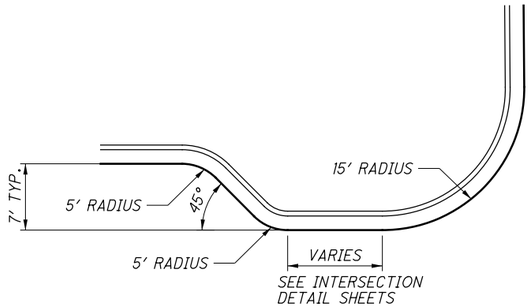

DETAIL A CURB BUMPOUT

COMBINED CURB AND GUTTER

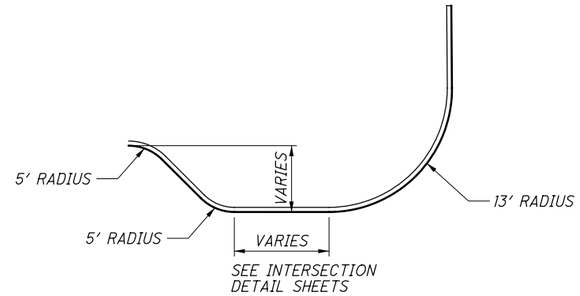

DETAIL B CURB BUMPOUT

TYPE 6 CURB

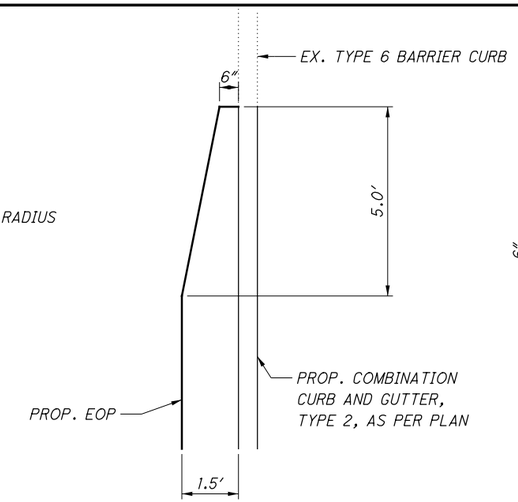

PLAN VIEW

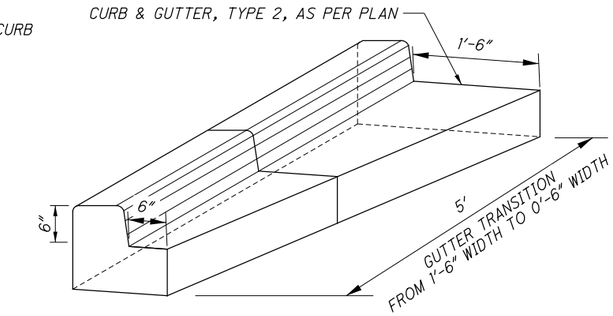

ISOMETRIC DRAWING

DETAIL C CURB TRANSITION

THE WORK SHOWN IN THIS DETAIL SHALL BE PAID FOR UNDER ITEM 609 - COMBINATION CURB AND GUTTER, TYPE 2, AS PER PLAN.

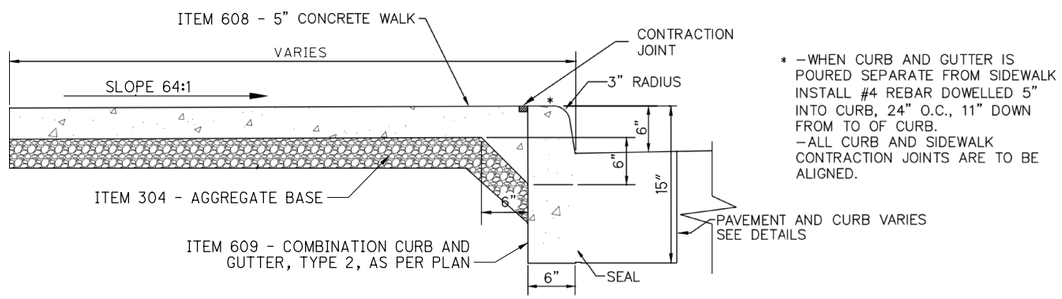

* -WHEN CURB AND GUTTER IS POURED SEPARATE FROM SIDEWALK INSTALL #4 REBAR DOWELLED 5" INTO CURB, 24" O.C., 11" DOWN FROM TO OF CURB.
-ALL CURB AND SIDEWALK CONTRACTION JOINTS ARE TO BE ALIGNED.

DETAIL D SIDEWALK WITH NO CURB LAWN JOINT DETAIL

CONTRACTION JOINT AND REBAR ARE INCIDENTAL TO ITEM 608 - 5" CONCRETE WALK

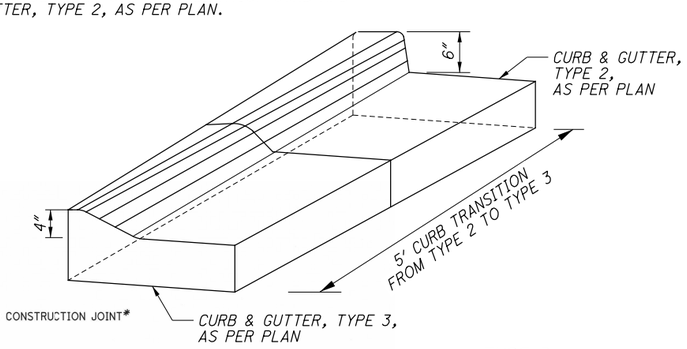

DETAIL G

TYPE 3 CURB TRANSITION

THE WORK SHOWN IN THIS DETAIL SHALL BE PAID FOR UNDER ITEM 609 - COMBINATION CURB AND GUTTER, TYPE 3, AS PER PLAN.

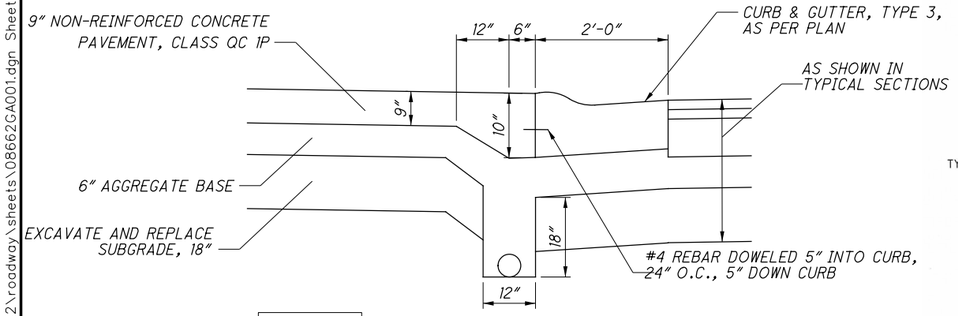

DETAIL E CONCRETE SHOULDER DETAIL

CONTRACTION JOINT AND REBAR ARE INCIDENTAL TO ITEM 608 - 9" NON-REINFORCED CONCRETE PAVEMENT

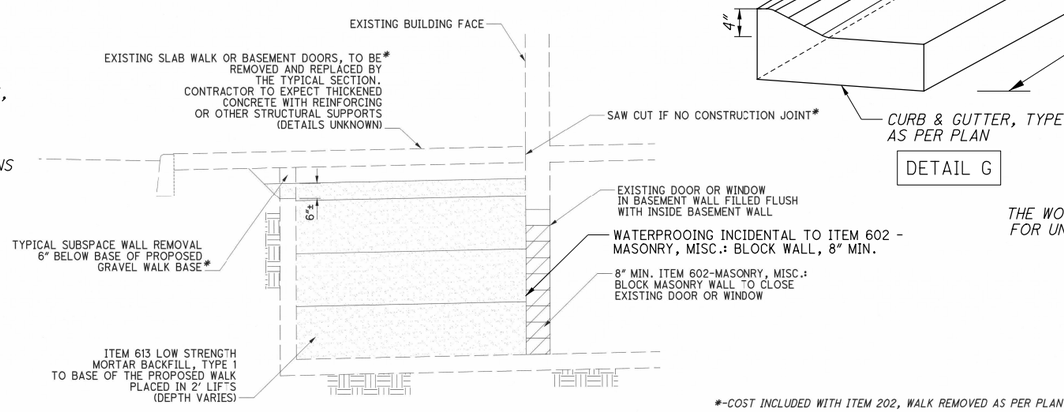

*-COST INCLUDED WITH ITEM 202, WALK REMOVED AS PER PLAN

DETAIL E-1 SECTION SHOWING TYPICAL SUBSPACE FILLING

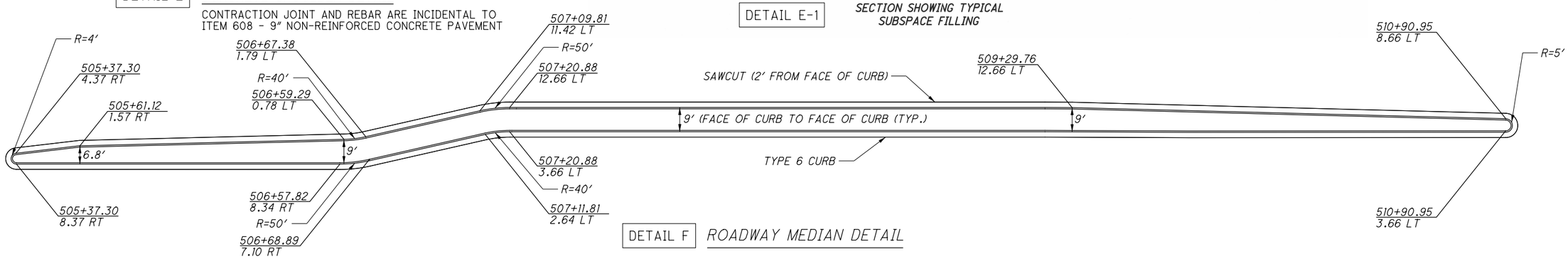

DETAIL F ROADWAY MEDIAN DETAIL

CALCULATED ATW
CHECKED JDH

PAVEMENT DETAILS

MIA-41-09.49

S:\CIN\4300-4399\4354\004\Drawings\CAD\108662\roadway\sheets\08662GA001.dgn Sheet 2/2/2022 11:35:11 AM Allisonw

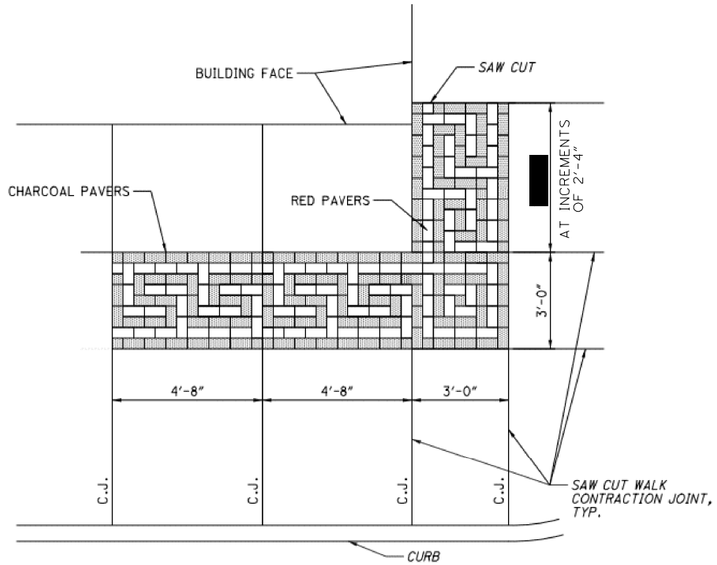

PAVER GREEK KEY PATTERN DETAIL

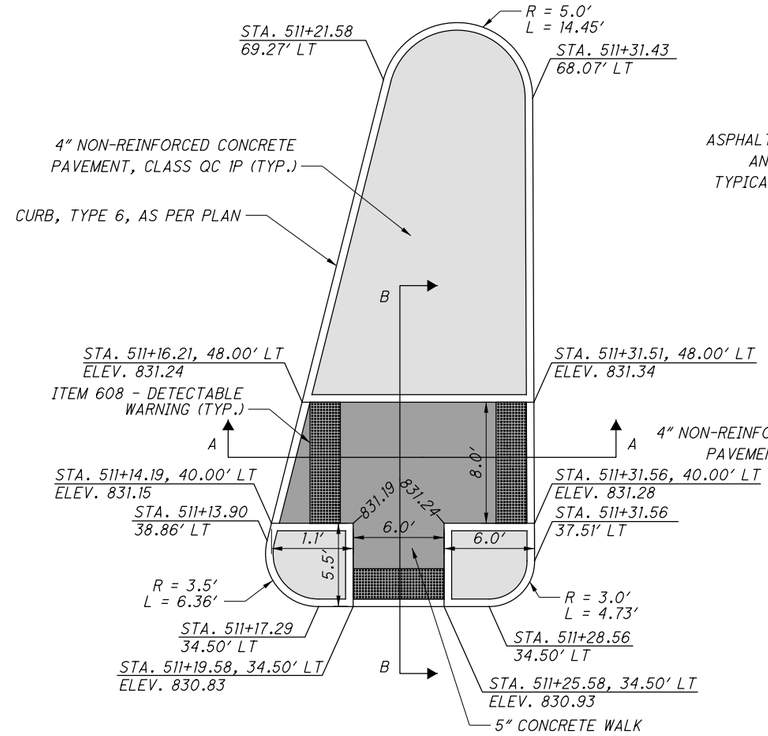

DETAIL J ADAMS STREET PEDESTRIAN REFUGE DETAIL

SEE INTERSECTION DETAIL SHEET FOR ELEVATIONS AND DIMENSIONS

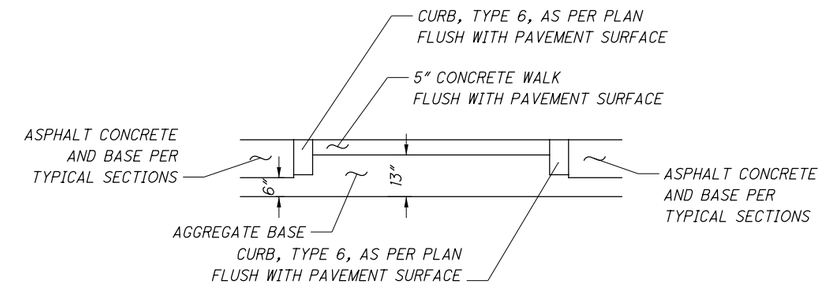

A-A PEDESTRIAN REFUGE AREA CROSS SECTION

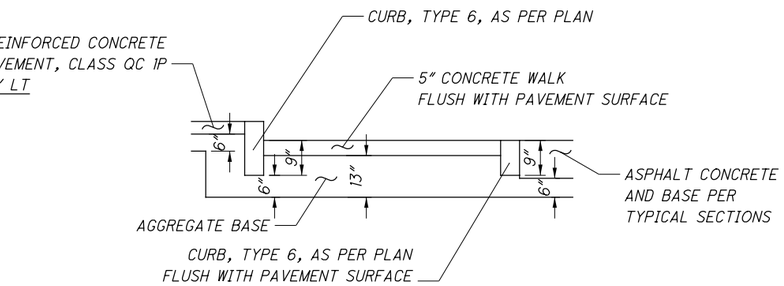

B-B PEDESTRIAN REFUGE AREA CROSS SECTION

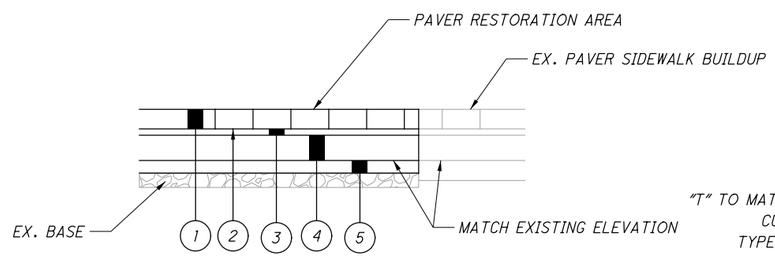

DETAIL H WALKWAY, MISC.: PAVER RESTORATION AND WALKWAY, MISC.: PAVER SYSTEM

1 - CONCRETE PAVERS (SEE SHEET 9)
2 - FILTER FABRIC
3 - 1" SAND BED
4 - 4" CONCRETE WALK
5 - AGGREGATE BASE (THICKNESS VARIES, 4" TO 8")

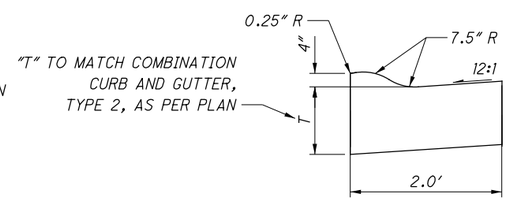

DETAIL K COMBINATION CURB AND GUTTER, TYPE 3, AS PER PLAN

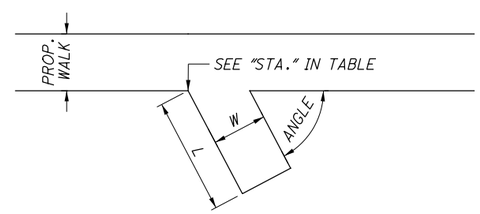

DETAIL 1 - FROM STREET

DETAIL 1 - TABLE

REFERENCE NUMBER	STA.	SIDE	LENGTH	WIDTH	ANGLE
			FT	FT	DEG
W1	487+01	RT	3.0	2.2	90
W2	487+67	RT	3.3	2.9	75
W3	489+42	RT	5.4	2.4	60
W4	490+85	RT	4.7	2.5	59
W5	491+05	RT	4.7	2.8	58
W6	505+37	RT	21.2	5.0	90
W7	508+68	RT	12.3	5.9	90
W8	508+72	LT	2.6	5.2	90

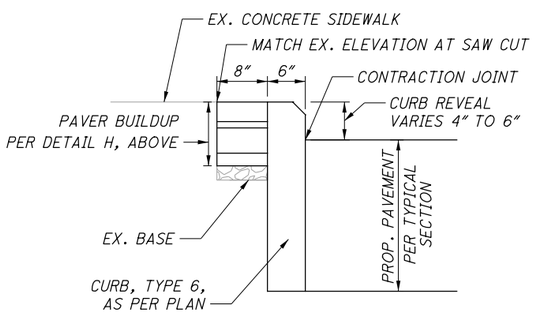

DETAIL I CURB, MISC.: STREETSCAPE CURB

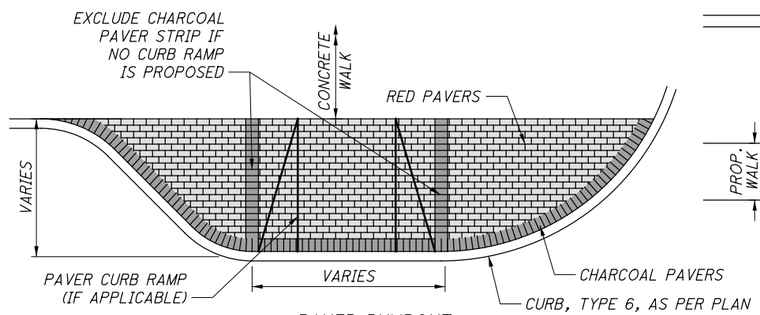

PAVER BUMPOUT PATTERN DETAIL

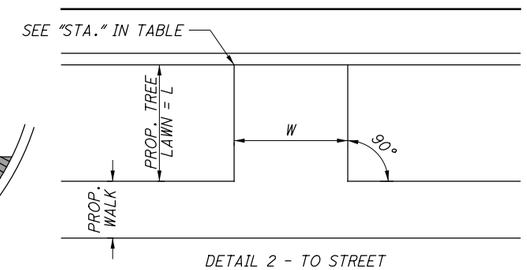

DETAIL 2 - TO STREET

DETAIL L SIDEWALK DETAILS

DETAIL 2 - TABLE

REFERENCE NUMBER	STA.	SIDE	LENGTH	WIDTH	ANGLE
			FT	FT	DEG
W9	516+13	LT	9.5	9.6	90
W10	516+59	RT	6.5	3.5	90
W11	516+82	RT	6.5	3.5	90

NOTE: ALL OTHER WALKWAY DETAILS ARE INCLUDED ON INTERSECTION DETAIL SHEETS. PAYMENT FOR WORK INCLUDED IN THESE SIDEWALK DETAILS WILL BE PAID FOR AS 608 - 5" CONCRETE WALK, AND ESTIMATED QUANTITIES ARE INCLUDED IN THE ROADWAY SUBSUMMARY.

CALCULATED ATW
CHECKED JDH

PAVEMENT DETAILS

MIA-41-09.49

S:\CIN\4300--4399\4354\004\Drawings\CAD\108662\roadway\sheets\08662GA002.dgn Sheet 2/2/2022 11:35:33 AM Allisonw

REF NO.	SHEET NO.	STATION TO STATION	201 TREE REMOVED, 18"	201 TREE REMOVED, 30"	202 PAVEMENT REMOVED	202 WALK REMOVED	202 CURB REMOVED	202 PIPE REMOVED, 24" AND UNDER	202 SPECIAL - FILL AND PLUG EXISTING CONDUIT: 10"	202 SPECIAL - FILL AND PLUG EXISTING CONDUIT: 12"	202 SPECIAL - FILL AND PLUG EXISTING CONDUIT: 15"	202 SPECIAL - FILL AND PLUG EXISTING CONDUIT: 18"	202 SPECIAL - FILL AND PLUG EXISTING CONDUIT: 24"	202 MANHOLE REMOVED, AS PER PLAN	202 CATCH BASIN REMOVED	202 REMOVAL MISC.: REMOVE AND RESET LANDSCAPING ROCK	202 SPECIAL - PARKING BLOCK REMOVED AND RESET	608 5" CONCRETE WALK	608 CURB RAMP	608 CURB RAMP, AS PER PLAN: 9" CONCRETE	608 DETECTABLE WARNING
			EACH	EACH	SY	SF	FT	FT	FT	FT	FT	FT	FT	EACH	EACH	EACH	EACH	SF	SF	SF	SF
	47	481+40 LT TO 487+00 LT			110.8	2236	640											1963.28	140.6	162.7	
	47	481+40 RT TO 483+97 RT	3		87.2	2684	596											2315.6	225.1		
R-1	47	481+68.38													1						
R-2	47	481+67.99												1							
R-3	47	482+73.90													1						
R-4		NOT USED																			
R-5	47	482+85.08												1							
R-6	47	482+98.15												1							
R-7	47	483+02.77													1						
R-8	47	483+15.59												1							
R-9	47	483+44.25													1						
R-10		NOT USED																			
R-11		NOT USED																			
R-12		NOT USED																			
R-13	47	484+15.10													1						
R-14		NOT USED																			
R-15	47	484+53.13												1							
R-16	47	485.84.75												1							
	47	481+50 TO 487+00						12	40	282	353	115									
	48	487+00 LT TO 492+00 LT			80.7	1931	500											2015	0		
	48	487+00 RT TO 491+98 RT		1	69.6	2017	504											2015.5	47.4		
R-17	48	487+05.62													1						
R-18	48	487+05.94													1						
R-19	48	489+83.65												1							
R-20	48	489+89.84													1						
R-21	48	489+97.97												1							
R-22	48	490+00.61												1							
R-23	48	490+01.46													1						
R-24	48	491+24.15												1							
R-25	48	491+30.44												1							
R-26	48	491+40.77												1							
	48	487+00 TO 492+00						50		27	64	307	226								
	49	492+00 LT TO 497+00 LT			153.1	1695	396											1466.5	348		16
	49	492+00 RT TO 497+00 RT			135.3	1743	310											1717.94	140		16
R-27	49	492+91.54	SEE LIGHTING SUBSUMMARY																		
R-28	49	493+09.28												1							
R-29	49	494+90.24												1							
R-30	49	495+00.00													1						
R-31	49	495+00.00													1						
R-32	49	495+00.00												1							
R-33	49	495+85.15	SEE LIGHTING SUBSUMMARY																		
	49	492+00 TO 497+00						18	56	7	27	49	181								
	50	497+00 LT TO 502+00 LT			88.3	1637	487									1		1557.8	175.6		
	50	497+00 RT TO 502+00 RT	2		125.8	2571	624									1	2	1950.9	211.9		
R-34	50	497+25.73	SEE LIGHTING SUBSUMMARY																		
R-35		NOT USED																			
R-36		NOT USED																			
R-37	50	499+09.26	SEE SANITARY ESTIMATED QUANTITIES TABLE ON SHEET 129																		
TOTALS CARRIED TO GENERAL SUMMARY			5	1	851	16514	4057	80	96	316	444	471	407	15	11	2	2	15003	1289	163	32

CALCULATED ATW
CHECKED JDH

ROADWAY SUBSUMMARY

MIA-41-09.49

S:\CIN\4300--4399\4354\004\Drawings\CAD\108662\roadway\sheets\08662GS002.dgn Sheet 2/2/2022 11:35:36 AM Allisonw

REF NO.	SHEET NO.	STATION TO STATION	201 TREE REMOVED, 18"	201 TREE REMOVED, 30"	202 PAVEMENT REMOVED	202 WALK REMOVED	202 CURB REMOVED	202 PIPE REMOVED, 24" AND UNDER	202 SPECIAL - FILL AND PLUG EXISTING CONDUIT: 8"	202 SPECIAL - FILL AND PLUG EXISTING CONDUIT: 12"	202 SPECIAL - FILL AND PLUG EXISTING CONDUIT: 15"	202 SPECIAL - FILL AND PLUG EXISTING CONDUIT: 18"	202 PIPE REMOVED, OVER 24"	202 MANHOLE REMOVED, AS PER PLAN	202 CATCH BASIN REMOVED	608 5" CONCRETE WALK	608 CURB RAMP	608 CURB RAMP, AS PER PLAN: 9" CONCRETE	608 CONCRETE STEPS, TYPE B	608 DETECTABLE WARNING
			EACH	EACH	SY	SF	FT	FT	FT	FT	FT	FT	FT	EACH	EACH	SF	SF	SF	FT	SF
R-38	50	499+09.55	SEE SANITARY ESTIMATED QUANTITIES TABLE ON SHEET 129																	
R-39		NOT USED																		
R-40	50	500+37.11	SEE LIGHTING SUBSUMMARY																	
R-41	50	501+31.55	SEE LIGHTING SUBSUMMARY																	
R-42	50	501+64.13												1						
	50	497+00 TO 502+00						48.3												
	51	502+00 LT TO 507+00 LT			171.7	2425	548.1									1883.6		502.9	14	
	51	502+00 CL TO 507+00 CL			217.8															
	51	502+00 RT TO 507+00 RT			91.1	2416	536.6									2030.2	349.4			
R-43	51	502+45.01	SEE LIGHTING SUBSUMMARY																	
R-44	51	502+58.17													1					
R-45	51	503+33.07													1					
R-46		NOT USED																		
R-47	51	503+41.14													1					
R-48	51	503+42.37													1					
R-49	51	503+56.27												1						
R-50	51	503+74.68												1						
R-51		NOT USED																		
R-52	51	504+04.46												1						
R-53	51	504+05.36													1					
R-54	51	504+07.35													1					
R-55		NOT USED																		
R-56	51	504+32.17													1					
R-57	51	504+50.10													1					
R-58	51	504+56.06	SEE LIGHTING SUBSUMMARY																	
R-59	51	504+58.22												1						
R-60	51	504+58.29												1						
R-61	51	504+59.88													1					
R-62	51	505+67.95												1						
R-63	51	505+82.13	SEE LIGHTING SUBSUMMARY																	
R-64	51	506+02.18													1					
R-65	51	506+18.85													1					
R-66	51	506+52.51	SEE LIGHTING SUBSUMMARY																	
	51	502+00 TO 507+00						32	56	269	30	132	345							
	52	507+00 LT TO 512+00 LT			101.1	2392	588.0									2698.3	306.8			44
	52	507+00 CL TO 512+00 CL			531.7															
	52	507+00 RT TO 512+00 RT	2		193.2	2140	504.2									2392.7	287.4			
R-67	52	507+29.76												1						
R-68	52	507+30.01													1					
R-69	52	507+84.31	SEE LIGHTING SUBSUMMARY																	
R-70	52	508+71.62												1						
R-71	52	509+18.48	SEE LIGHTING SUBSUMMARY																	
R-72	52	509+36.25												1						
R-73	52	509+42.91												1						
R-74	52	509+78.62													1					
R-75	52	510+04.10													1					
R-76	52	510+02.90												1						
R-77	52	510+04.60													1					
R-78	52	511+08.74	SEE LIGHTING SUBSUMMARY																	
R-79		NOT USED																		
R-80		NOT USED																		
R-81	52	511+33.28													1					
R-82	52	511+56.44												1						
R-83		NOT USED																		
TOTALS CARRIED TO GENERAL SUMMARY			2	0	1307	9373	2177	80	56	269	30	132	345	13	16	9005	944	503	14	44

CALCULATED ATW
CHECKED JDH

ROADWAY SUBSUMMARY

MIA-41-09.49

S:\CIN\4300-4399\4354\004\Drawings\CAD\108662\roadway\sheets\086620S003.dgn Sheet 2/2/2022 11:35:37 AM Allisonrw

REF NO.	SHEET NO.	STATION TO STATION	201 TREE REMOVED, 18"	201 TREE REMOVED, 30"	202 PAVEMENT REMOVED	202 WALK REMOVED	202 CURB REMOVED	202 PIPE REMOVED, 24" AND UNDER	202 SPECIAL - FILL AND PLUG EXISTING CONDUIT: 12"	202 SPECIAL - FILL AND PLUG EXISTING CONDUIT: 15"	202 SPECIAL - FILL AND PLUG EXISTING CONDUIT: 18"	202 PIPE REMOVED, OVER 24"	202 MANHOLE REMOVED, AS PER PLAN	202 CATCH BASIN REMOVED	202 REMOVAL MISC.: PAVER WALKWAY REMOVED	202 REMOVAL MISC.: TREE WELL REMOVED	608 5" CONCRETE WALK	608 WALKWAY, MISC.: PAVER SYSTEM	608 CURB RAMP	608 CURB RAMP, AS PER PLAN: PAVER CURB RAMP
			EACH	EACH	SY	SF	FT	FT	FT	FT	FT	FT	EACH	EACH	SF	EACH	SF	SF	SF	SF
R-84	52	511+93.46												1						
	52	507+00 TO 512+00							123	255		236.5								
	53	512+00 LT TO 517+00 LT	4		168.6	3815	488.7										2781		317.9	
	53	512+00 RT TO 517+00 RT	1		175.6	2234	480										1973.7		252.5	
R-85	53	512+33.62												1						
R-86	53	512+94.02										SEE LIGHTING SUBSUMMARY								
R-87	53	513+95.17											1							
R-88		NOT USED																		
R-89	53	514+24.95										SEE LIGHTING SUBSUMMARY								
R-90	53	514+56.49											1							
R-91		NOT USED																		
R-92		NOT USED																		
R-93	53	514+87.85												1						
R-94	53	514+88.76												1						
R-95	53	514+96.12											1							
R-96	53	516+17.37										SEE LIGHTING SUBSUMMARY								
	53	512+00 TO 517+00							262	70	241									
	54	517+00 LT TO 522+00 LT		1	355.1	3818	548.7										3612.3	950.6	623.9	91.2
	54	517+00 RT TO 522+00 RT	4		223.6	4052	483.1										3456.3	497.7	675.7	69.8
R-97	54	517+21.02										SEE LIGHTING SUBSUMMARY								
R-98	54	517+54.15											1							
R-99	54	517+84.77												1						
R-100	54	517+84.92												1						
R-101	54	518+87.93										SEE LIGHTING SUBSUMMARY								
R-102	54	520+04.72												1						
R-103	54	520+05.21												1						
R-104	54	520+11.45										SEE LIGHTING SUBSUMMARY								
R-105	54	520+28.51												1						
R-106	54	520+54.70											1							
R-107	54	520+58.63											1							
R-108	54	520+63.68												1						
R-109	54	520+80.07										SEE LIGHTING SUBSUMMARY								
R-110	54	520+86.11												1						
R-111	54	520+86.54												1						
R-112	54	521+34.38										SEE LIGHTING SUBSUMMARY								
R-113	54	521+92.74										SEE LIGHTING SUBSUMMARY								
	54	517+00 TO 522+00						186	122	140	51									
	55	522+00 LT TO 527+00 LT			366.5	6066	437										4520	3578.8	164.4	251.2
	55	522+00 RT TO 527+00 RT	4		216.4	5202	478								90	5	3719.56	1812.94	273	163.9
R-114	55	522+51.42										SEE LIGHTING SUBSUMMARY								
R-115	55	522+58.74											1							
R-116	55	522+67.24										SEE LIGHTING SUBSUMMARY								
R-117	55	522+99.61												1						
R-118	55	523+00.50												1						
R-119	55	523+04.19											1							
R-120	55	523+31.14											1							
R-121		NOT USED																		
R-122	55	523+58.99											1							
R-123	55	523+76.63										SEE LIGHTING SUBSUMMARY								
R-124	55	523+81.40										SEE LIGHTING SUBSUMMARY								
R-125		NOT USED																		
TOTALS CARRIED TO GENERAL SUMMARY			13	1	1506	25187	2916	186	507	465	292	237	10	14	90	5	20063	6840	2307	576

CALCULATED ATW
CHECKED JDH

ROADWAY SUBSUMMARY

MIA-41-09.49

S:\CIN\4300-4399\4354\004\Drawings\CAD\108662\roadway\sheets\08662GS004.dgn Sheet 2/2/2022 11:35:37 AM Allisonw

REF NO.	SHEET NO.	STATION TO STATION	201 TREE REMOVED, 18"	201 TREE REMOVED, 30"	202 PAVEMENT REMOVED	202 WALK REMOVED	202 CURB REMOVED	202 SPECIAL - FILL AND PLUG EXISTING CONDUIT: 8"	202 SPECIAL - FILL AND PLUG EXISTING CONDUIT: 12"	202 SPECIAL - FILL AND PLUG EXISTING CONDUIT: 15"	202 SPECIAL - FILL AND PLUG EXISTING CONDUIT: 18"	202 SPECIAL - FILL AND PLUG EXISTING CONDUIT: 24"	202 MANHOLE REMOVED, AS PER PLAN	202 CATCH BASIN REMOVED	202 REMOVAL MISC.: PAVER WALKWAY REMOVED	202 REMOVAL MISC.: CONCRETE PLANTER BOX REMOVED	608 5" CONCRETE WALK	608 WALKWAY, MISC.: PAVER SYSTEM	608 CURB RAMP, AS PER PLAN: PAVER CURB RAMP
			EACH	EACH	SY	SF	FT	FT	FT	FT	FT	FT	EACH	EACH	SF	EACH	SF	SF	SF
R-126	55	523+84.42												1					
R-127	55	523+84.67												1					
R-128	55	523+85.08											1						
R-129	55	523+95.35											1						
R-130	55	524+37.61										SEE LIGHTING SUBSUMMARY							
R-131	55	524+62.07												1					
R-132	55	524+63.56											1						
R-133	55	524+94.07										SEE LIGHTING SUBSUMMARY							
R-134	55	525+22.18												1					
R-135	55	525+52.74										SEE LIGHTING SUBSUMMARY							
R-136		NOT USED																	
R-137		NOT USED																	
R-138	55	526+64.52														1			
R-139	55	526+84.66														1			
	55	522+00 TO 527+00						45	177	185	50	122							
	56	527+00 RT TO 528+94.31 RT			39.6		176								300			342.9	66.4
R-140	56	527+88.20														1			
	56	101+00 LT TO 102+29.16 LT			16.2	597	129										723.6		
R-141	56	101+63.93 LT ADAMS ST										SEE LIGHTING SUBSUMMARY							
TOTALS CARRIED TO GENERAL SUMMARY					56	597	305	45	177	185	50	122	3	4	300	3	724	343	66

CALCULATED ATW
CHECKED JDH

ROADWAY SUBSUMMARY

MIA-41-09.49

S:\CIN\4300-4399\4354\004\Drawings\CAD\108662\roadway\sheets\08662GS005.dgn Sheet 2/2/2022 11:35:38 AM Allisonw

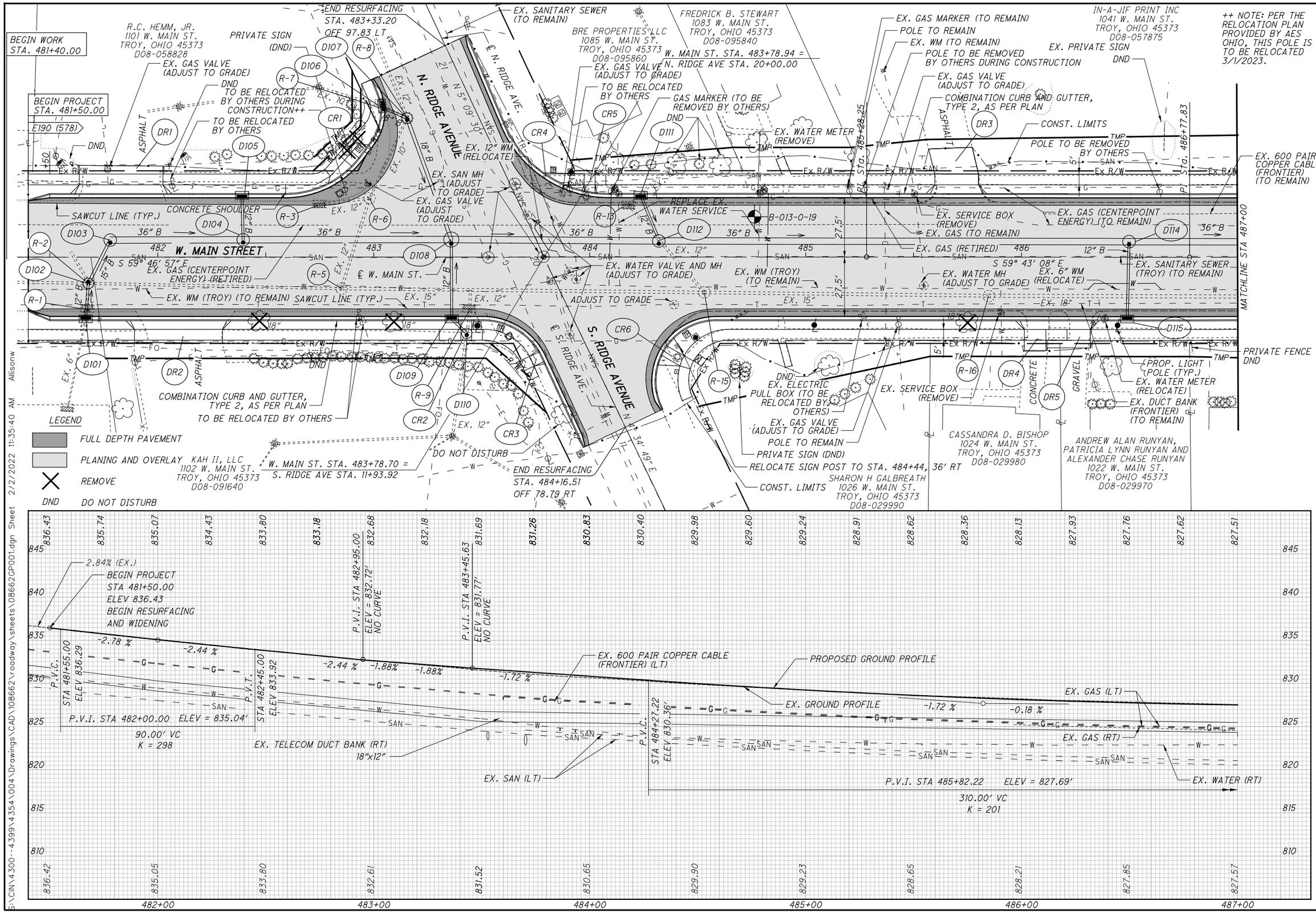

HORIZONTAL SCALE IN FEET 0 10 20 40

CALCULATED ATW CHECKED JDH

PLAN AND PROFILE-STA 481+40 TO STA 487+00 WEST MAIN STREET (SR 41)

MIA-41-09.49

S:\CIN\4300--4399\4354\004\Drawings\CAD\108662\roadway\sheets\08662GP001.dgn Sheet 2/2/2022 11:35:40 AM Allisonw

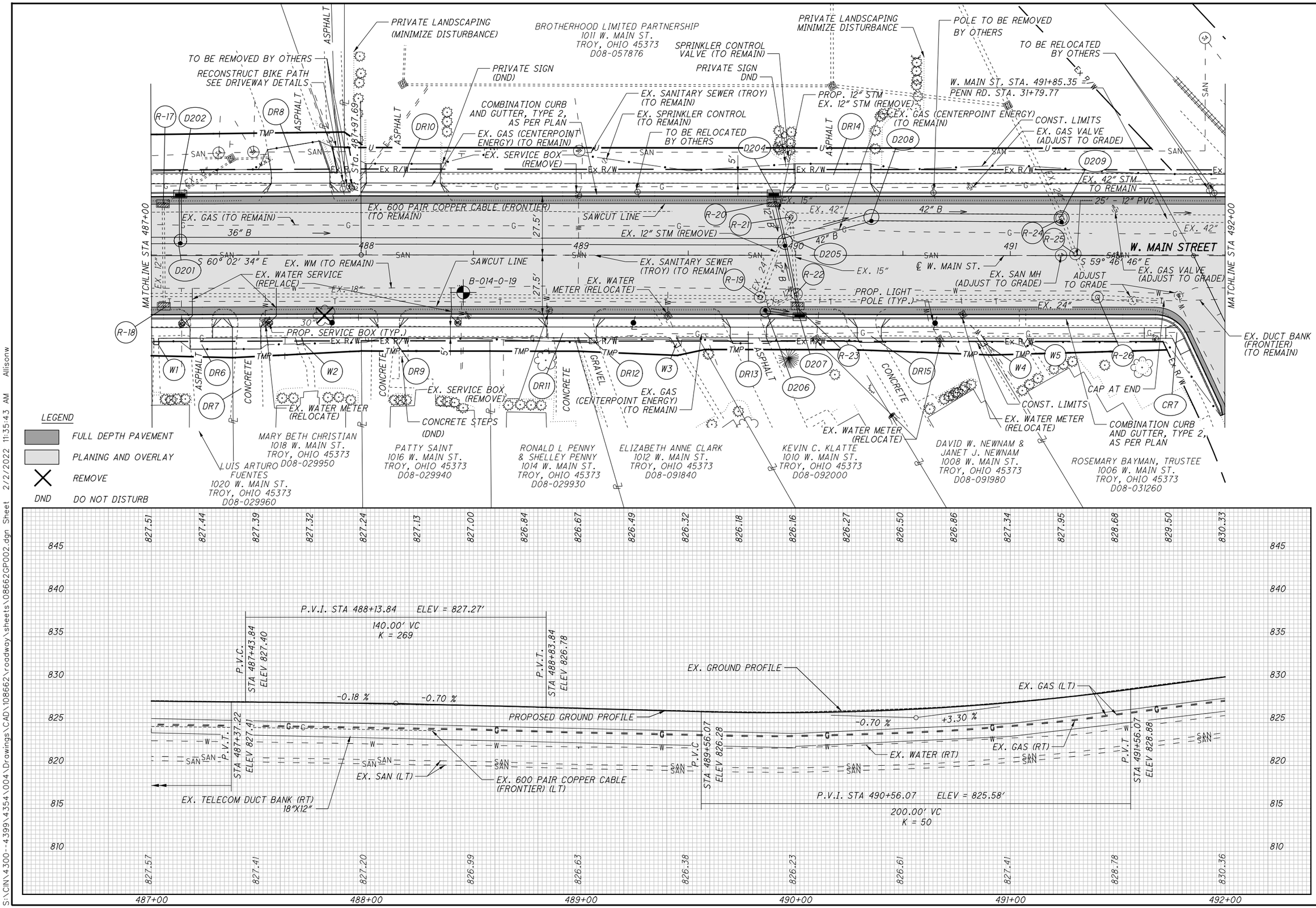

HORIZONTAL SCALE IN FEET 0 10 20 40

CALCULATED ATW
CHECKED JDH

PLAN AND PROFILE-STA 487+00 TO STA 492+00 WEST MAIN STREET (SR 41)

MIA-41-09.49

S:\CIN\4300--4399\4354\004\Drawings\CAD\108662\roadway\sheets\08662GP002.dgn Sheet 2/2/2022 11:35:43 AM Allisonw

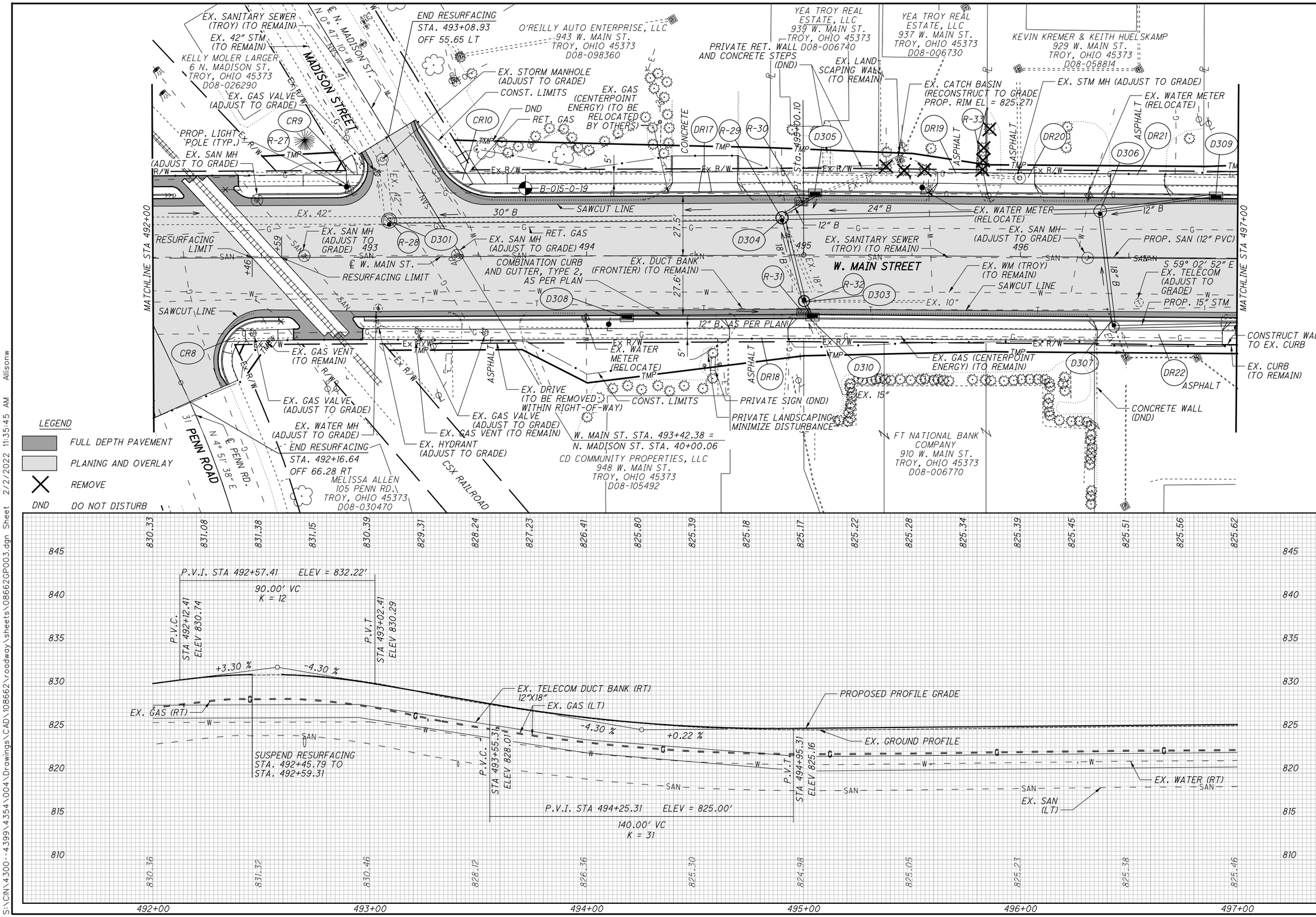

HORIZONTAL SCALE IN FEET 0 10 20 40

CALCULATED ATW
CHECKED JDH

PLAN AND PROFILE-STA 492+00 TO STA 497+00 WEST MAIN STREET (SR 41)

MIA-41-09.49

S:\CIN\4300--4399\4354\004\Drawings\CAD\108662\roadway\sheets\08662GP003.dgn Sheet 2/2/2022 11:35:45 AM Allisonw

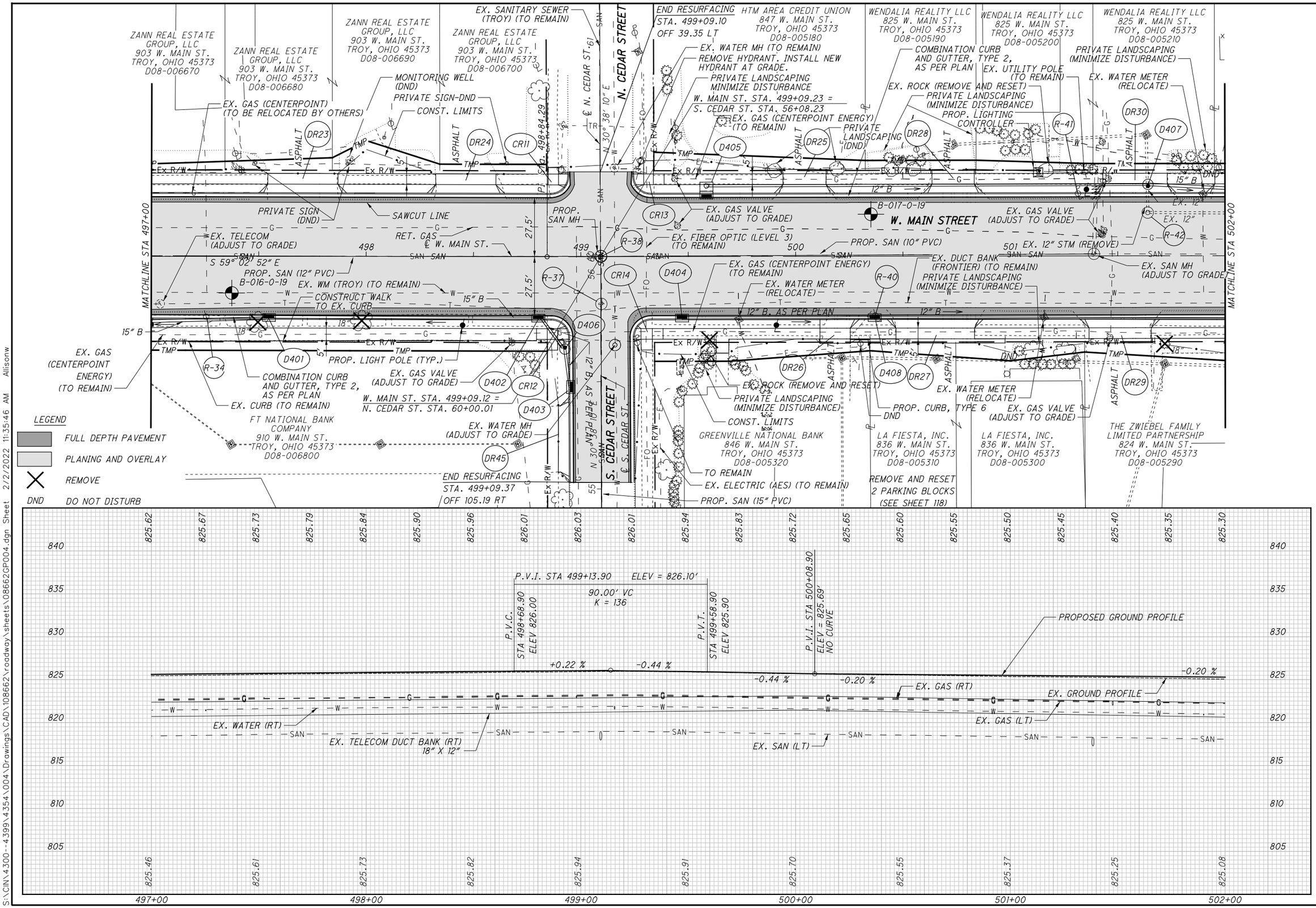

HORIZONTAL SCALE IN FEET 0 10 20 40

CALCULATED ATW
CHECKED JDH

PLAN AND PROFILE-STA 497+00 TO STA 502+00 WEST MAIN STREET (SR 41)

MIA-41-09.49

S:\CIN\4300--4399\4354\004\Drawings\CAD\108662\roadway\sheets\086620P004.dgn Sheet 2/2/2022 11:35:46 AM Allisonw

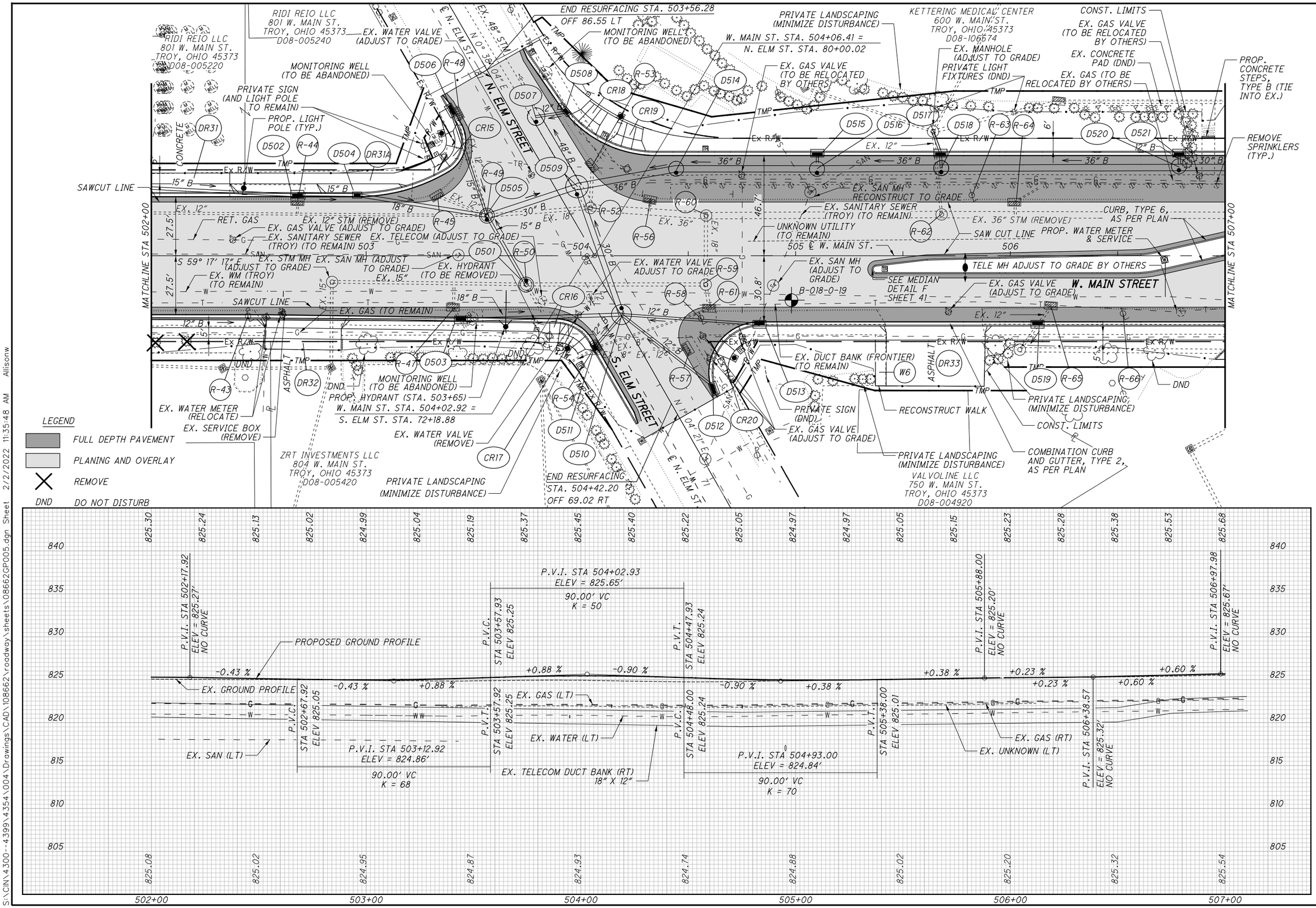

HORIZONTAL SCALE IN FEET 0 10 20 40

CALCULATED ATW
CHECKED JDH

PLAN AND PROFILE-STA 502+00 TO STA 507+00
WEST MAIN STREET (SR 41)

MIA-41-09.49

S:\CIN\4300-4399\4354\004\Drawings\CAD\108662\roadway\sheets\08662GP005.dgn Sheet 2/2/2022 11:35:48 AM Allisonw

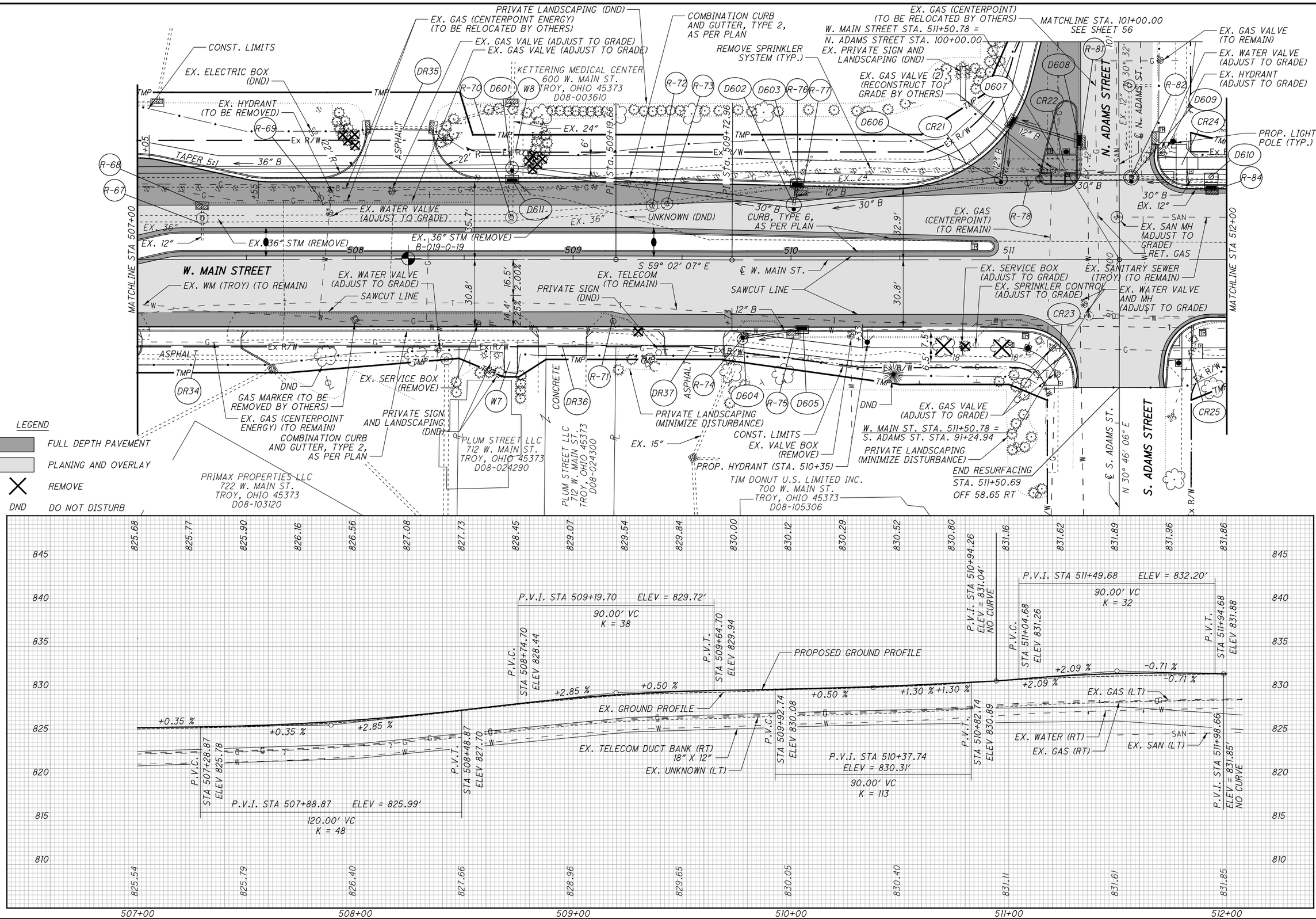

HORIZONTAL SCALE IN FEET 0 10 20 40

CALCULATED ATW
CHECKED JDH

PLAN AND PROFILE-STA 507+00 TO STA 512+00
WEST MAIN STREET (SR 41)

MIA-41-09.49

S:\CIN\4300--4399\4354\004\Drawings\CAD\108662\roadway\sheets\08662GP006.dgn Sheet 2/2/2022 11:35:52 AM Allisonw

NOTE: LIGHT POLES BEHIND WALK STA. 515+00 TO STA 516+50
DND

BOARD OF COMMISSIONERS OF MIAMI COUNTY, OHIO
510 W. MAIN ST.
D08-250037

PRIVATE LANDSCAPING (MINIMIZE DISTURBANCE)
CONCRETE STEPS (DND)
MATCH BACK OF EX. WALK
EX. LANDSCAPE RETAINING WALL (DND)
EX. SERVICE BOX (REMOVE)
COMBINATION CURB AND GUTTER, TYPE 2, AS PER PLAN
EX. SANITARY SEWER (TROY) (TO REMAIN)
SAWCUT LINE (TYP.)
COMBINATION CURB AND GUTTER, TYPE 2, AS PER PLAN
UNKNOWN (DND)
EX. SERVICE BOX (REMOVE)
EX. SAN MH (ADJUST TO GRADE)
B-020-0-19
MATCHLINE STA 512+00

END RESURFACING
STA. 514+47.88
OFF 49.23 LT
EX. SAN MH (ADJUST TO GRADE)
W. MAIN ST. STA. 514+47.81 =
MONROE ST. STA. 113+10.79
PROP. LIGHT POLE (TYP.)
EX. GAS (CENTERPOINT ENERGY) (TO REMAIN)
EX. SAN MH (ADJUST TO GRADE)
EX. TELE MANHOLE (ADJUST TO GRADE)
EX. WATER VALVE AND MH (ADJUST TO GRADE)
EX. WATER METER (ADJUST TO GRADE)
EX. WATER METER (RELOCATE)
EX. WATER VALVE (ADJUST TO GRADE)
EX. GAS VALVE (ADJUST TO GRADE)
END RESURFACING
STA. 514+47.73
OFF 54.58 RT
EX. AT&T DUCT BANK (TO REMAIN)
PRIVATE LANDSCAPING (MINIMIZE DISTURBANCE)
CONST. LIMITS
HAUBERT-HOWE PROPERTIES LTD
518 W. MAIN ST.
D08-003720
SANDY M. DUNAWAY & BRENDA L. LUDWIG
514 W. MAIN ST.
D08-003730
SANDY M. DUNAWAY & BRENDA L. LUDWIG
508 W. MAIN ST.
D08-003700
ROBERT P. LEWIS & MIRELLA A. LEWIS
502 W. MAIN ST.
D08-003690

N. MONROE ST.
℄ N. MONROE ST.
N 30° 46' 06" E 114
S. MONROE ST.
℄ S. MONROE ST.
112

BOARD OF TRUSTEES, TROY-MIAMI COUNTY PUBLIC LIBRARY
419 W. MAIN ST.
D08-250195
CONST. LIMITS
EX. ELECTRIC (AES) (TO REMAIN)
EX. SAN MH (ADJUST TO GRADE)
EX. LIGHT POLE (TO REMAIN)
EX. CONCRETE WATER VAULT AND SERVICE BOX (TO BE RELOCATED BY OTHERS)
W. MAIN STREET
℄ W. MAIN ST.
RET. GAS (CENTERPOINT -ENERGY) (TO REMAIN)
EX. GAS (CENTERPOINT ENERGY) (TO REMAIN)
EX. WM (TROY) (TO REMAIN)
PLANTING MISC.: LANDSCAPING TREE (TYP.)
EX. LIGHT POLE (DND)
EX. GAS VALVE (ADJUST TO GRADE)
EX. DUCT BANK (FRONTIER) (TO REMAIN)
EX. HYDRANT (ADJUST TO GRADE)
EX. SANITARY SEWER (TROY) (TO REMAIN)
VIKING PROPERTY HOLDINGS II LLLC
414 W. MAIN ST.
D08-003660
VIKING PROPERTY HOLDINGS II LLLC
414 W. MAIN ST.
D08-003650
404 WEST MAIN STREET LLC
404 W. MAIN ST.
D08-003640
MATCHLINE STA 517+00

LEGEND
FULL DEPTH PAVEMENT
PLANING AND OVERLAY
REMOVE
DND DO NOT DISTURB

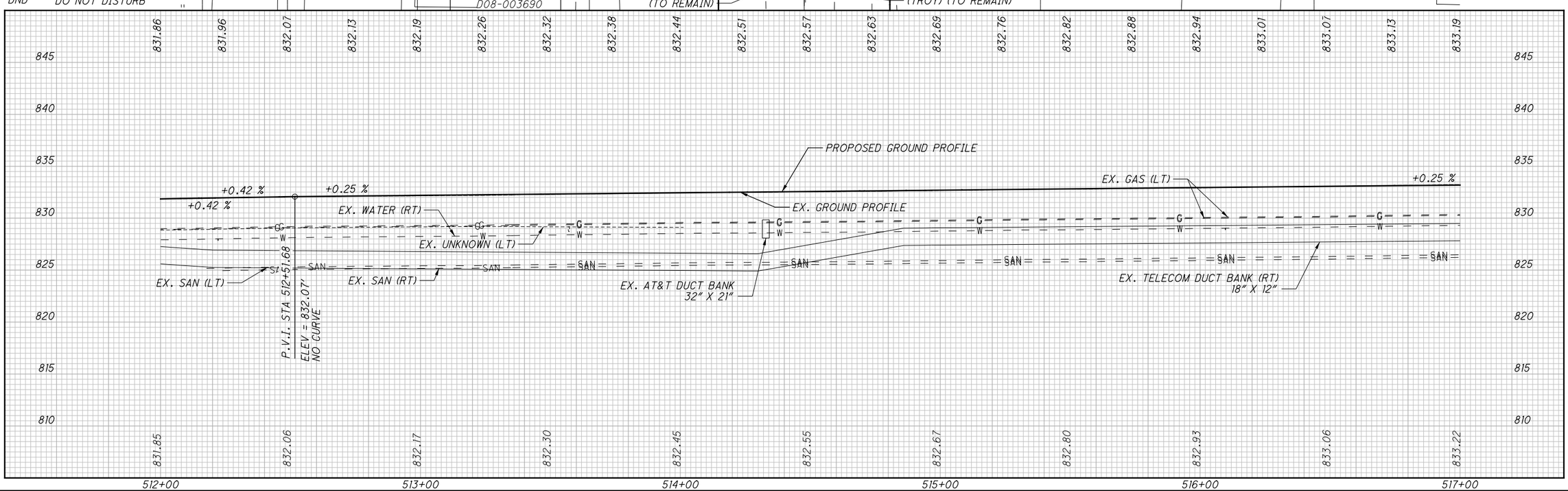

HORIZONTAL SCALE IN FEET 0 10 20 40

CALCULATED ATW
CHECKED JDH

PLAN AND PROFILE-STA 512+00 TO STA 517+00
WEST MAIN STREET (SR 41)

MIA-41-09.49

S:\CIN\4300--4399\4354\004\Drawings\CAD\108662\roadway\sheets\08662GP007.dgn Sheet 2/2/2022 11:35:54 AM Allisonw

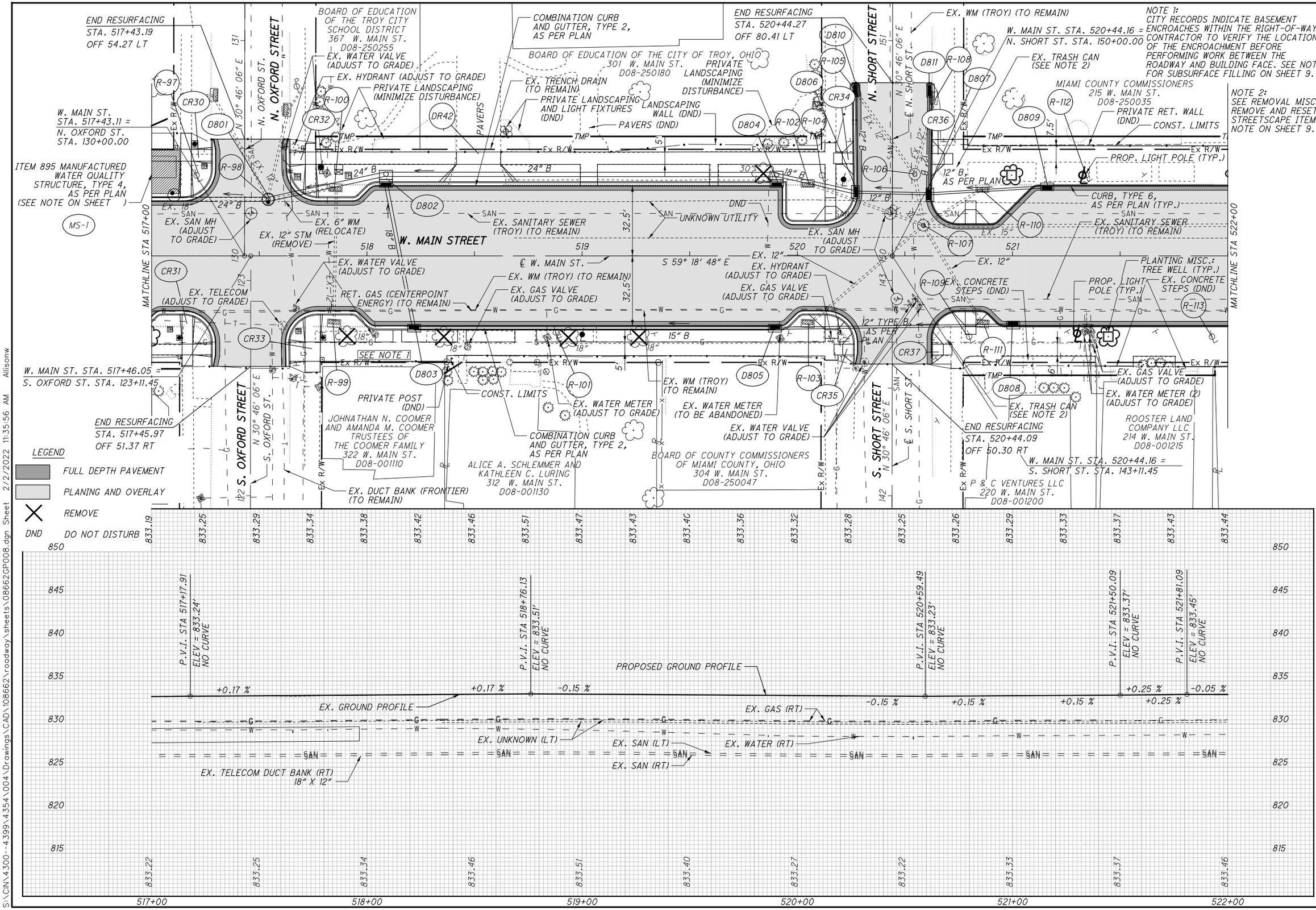

HORIZONTAL SCALE IN FEET 0 10 20 40

CALCULATED ATW
CHECKED JDH

PLAN AND PROFILE-STA 517+00 TO STA 522+00 WEST MAIN STREET (SR 41)

MIA-41-09.49

S:\CIN\4300-4399\4354\004\Drawings\CAD\108662\roadway\sheets\086620P008.dgn Sheet 2/2/2022 11:35:56 AM Allisonw

NOTE 1:
CITY RECORDS INDICATE BASEMENT ENCROACHES WITHIN THE RIGHT-OF-WAY. CONTRACTOR TO VERIFY THE LOCATIONS OF THE ENCROACHMENT BEFORE PERFORMING WORK BETWEEN THE ROADWAY AND BUILDING FACE. SEE NOTE FOR SUBSURFACE FILLING ON SHEET 9.

NOTE 2:
SEE REMOVAL MISC.: REMOVE AND RESET STREETSCAPE ITEMS NOTE ON SHEET 9.

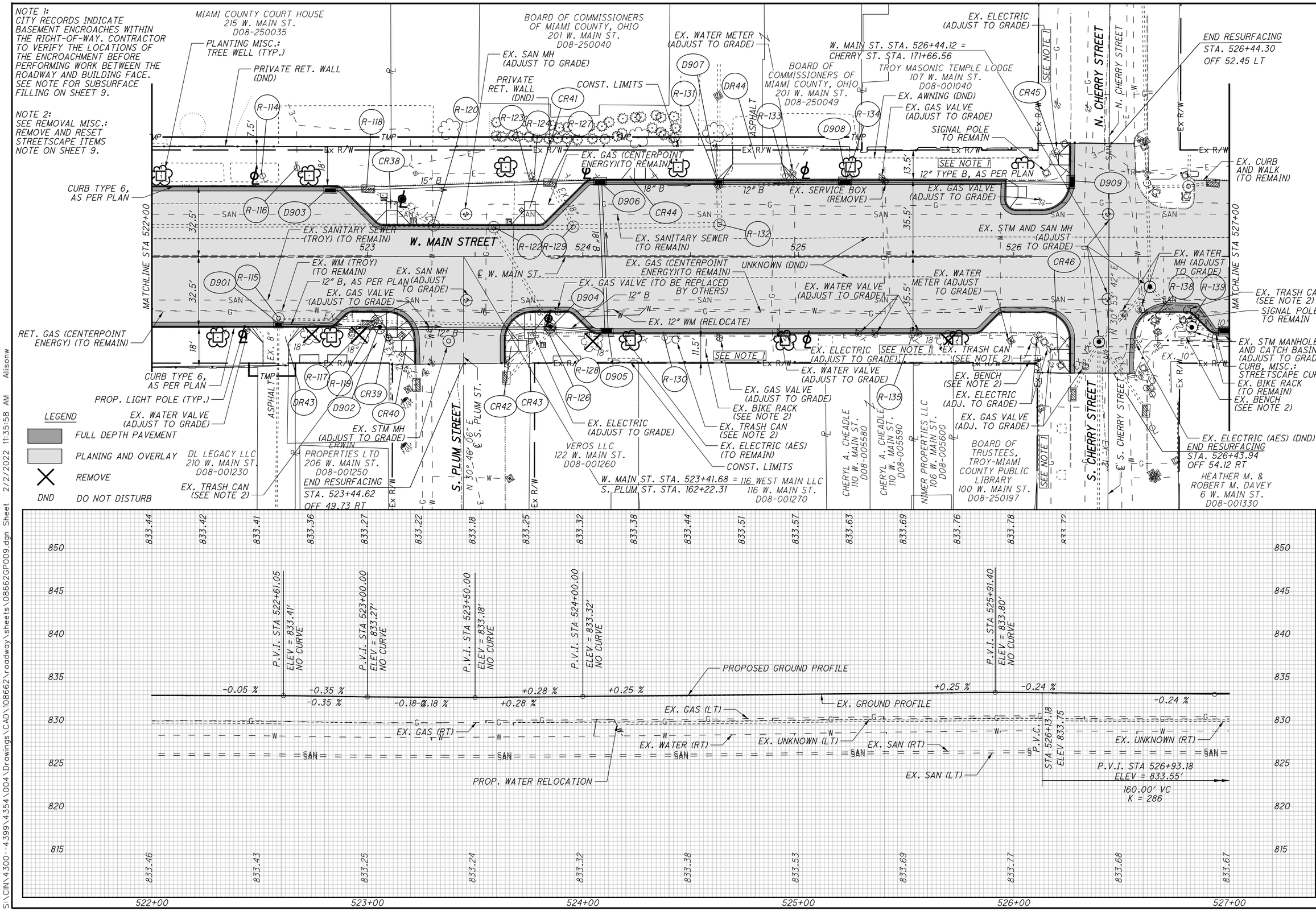

HORIZONTAL SCALE IN FEET 0 10 20 40

CALCULATED ATW
CHECKED JDH

PLAN AND PROFILE-STA 522+00 TO STA 527+00
WEST MAIN STREET (SR 41)

MIA-41-09.49

S:\CIN\4300--4399\4354\004\Drawings\CAD\108662\roadway\sheets\08662GP009.dgn Sheet 2/2/2022 11:35:58 AM Allisonw

NOTE:
SEE REMOVAL MISC.:
REMOVE AND RESET
STREETSCAPE ITEMS
NOTE ON SHEET 9.

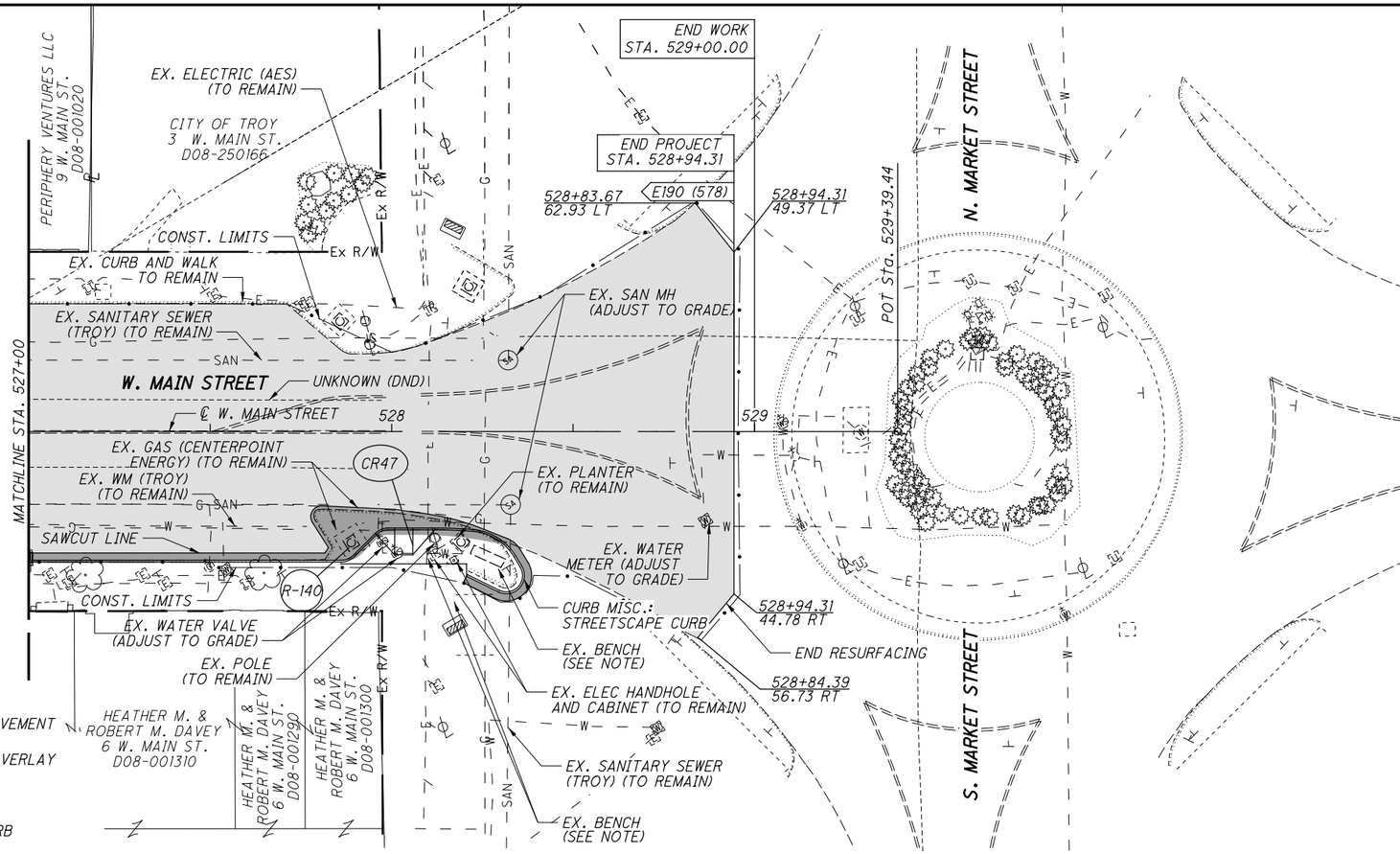

LEGEND

- FULL DEPTH PAVEMENT
- PLANING AND OVERLAY
- REMOVE
- DND DO NOT DISTURB

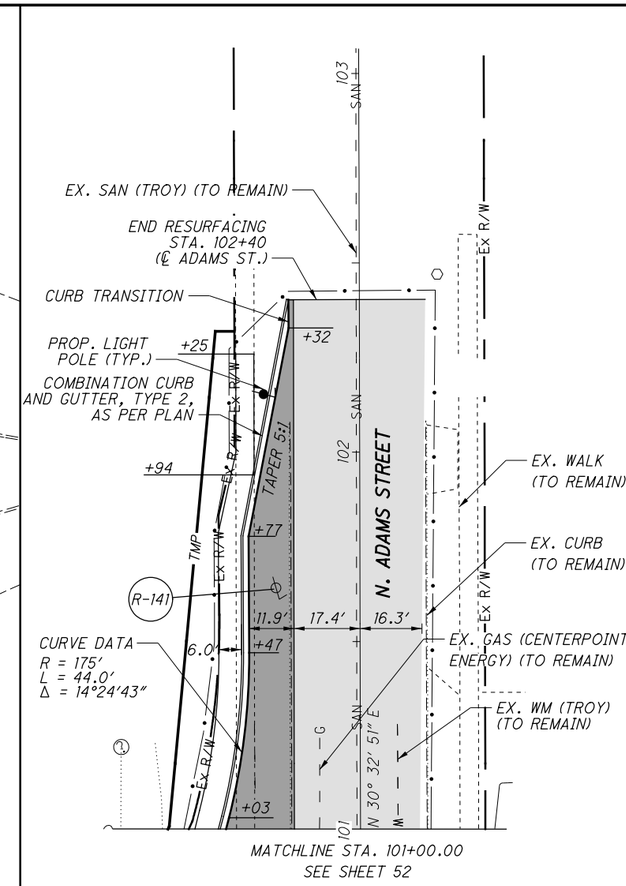

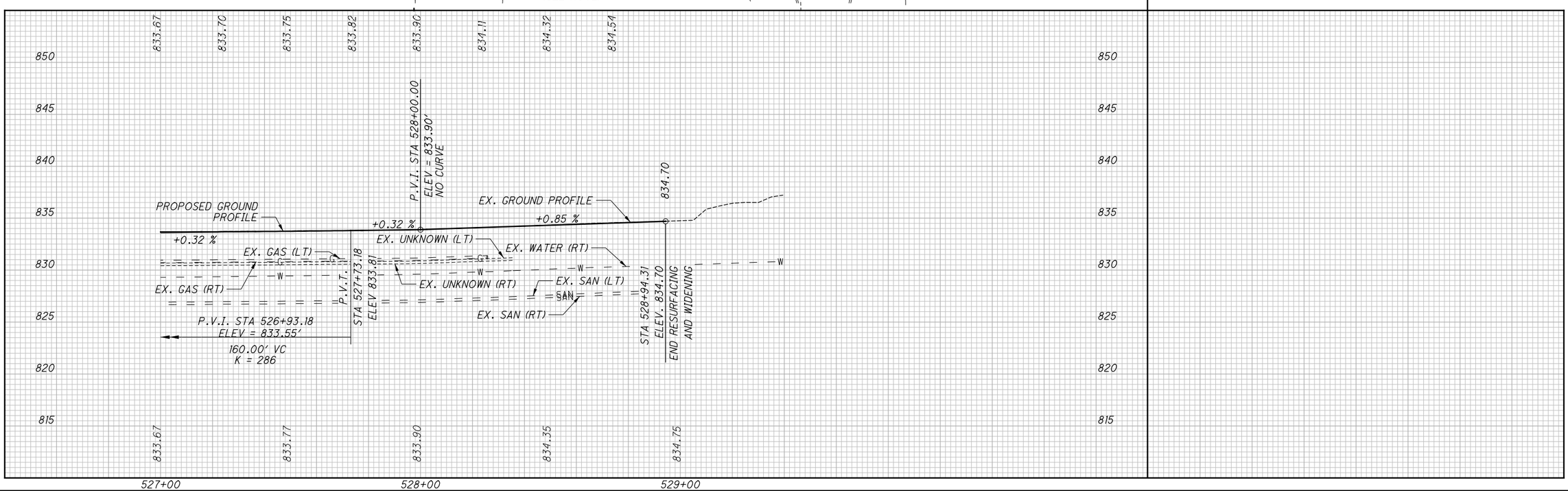

HORIZONTAL SCALE IN FEET
0 10 20 40

CALCULATED ATW
CHECKED JDH

PLAN AND PROFILE-STA 527+00 TO STA 529+39
WEST MAIN STREET (SR 41)

MIA-41-09.49

S:\CIN\4300--4399\4354\004\Drawings\CAD\108662\roadway\sheets\08662GP010.dgn Sheet 2/2/2022 11:36:01 AM Allisonw

SEEDING	
END WIDTH	SQ. YDS.

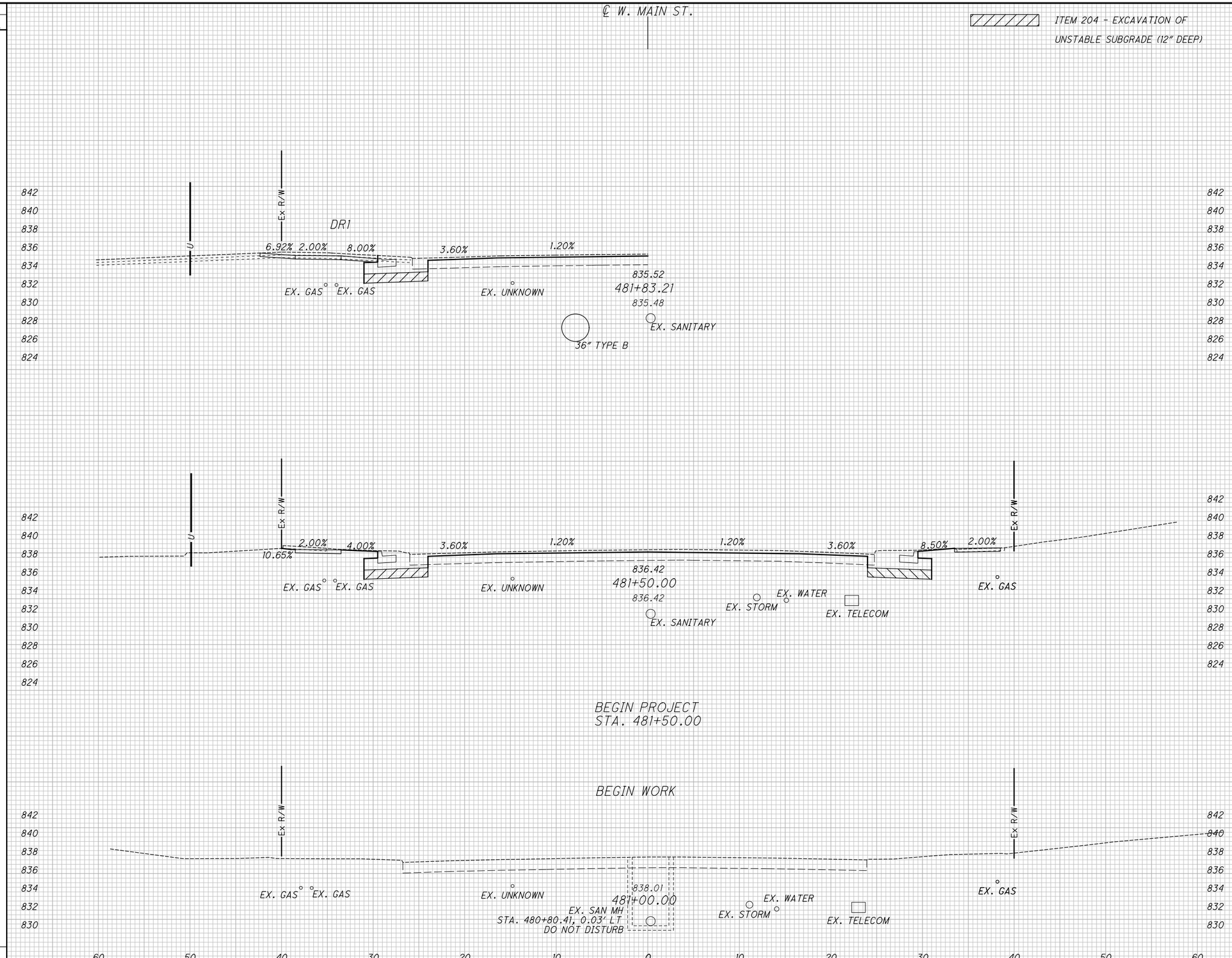

END AREA		VOLUME	
CUT	FILL	CUT	FILL

24

CALCULATED ATW
CHECKED JDH

CROSS SECTIONS WEST MAIN STREET (SR 41)
STA. 481+00.00 TO STA. 481+83.21

MIA-41-09.49

S:\CIN\4300-4399\4354\004\Drawings\CAD\108662\roadway\sheets\08662XS004.dgn Sheet 2/2/2022 11:36:02 AM Allisonw

SEEDING	
END WIDTH	SQ. YDS.

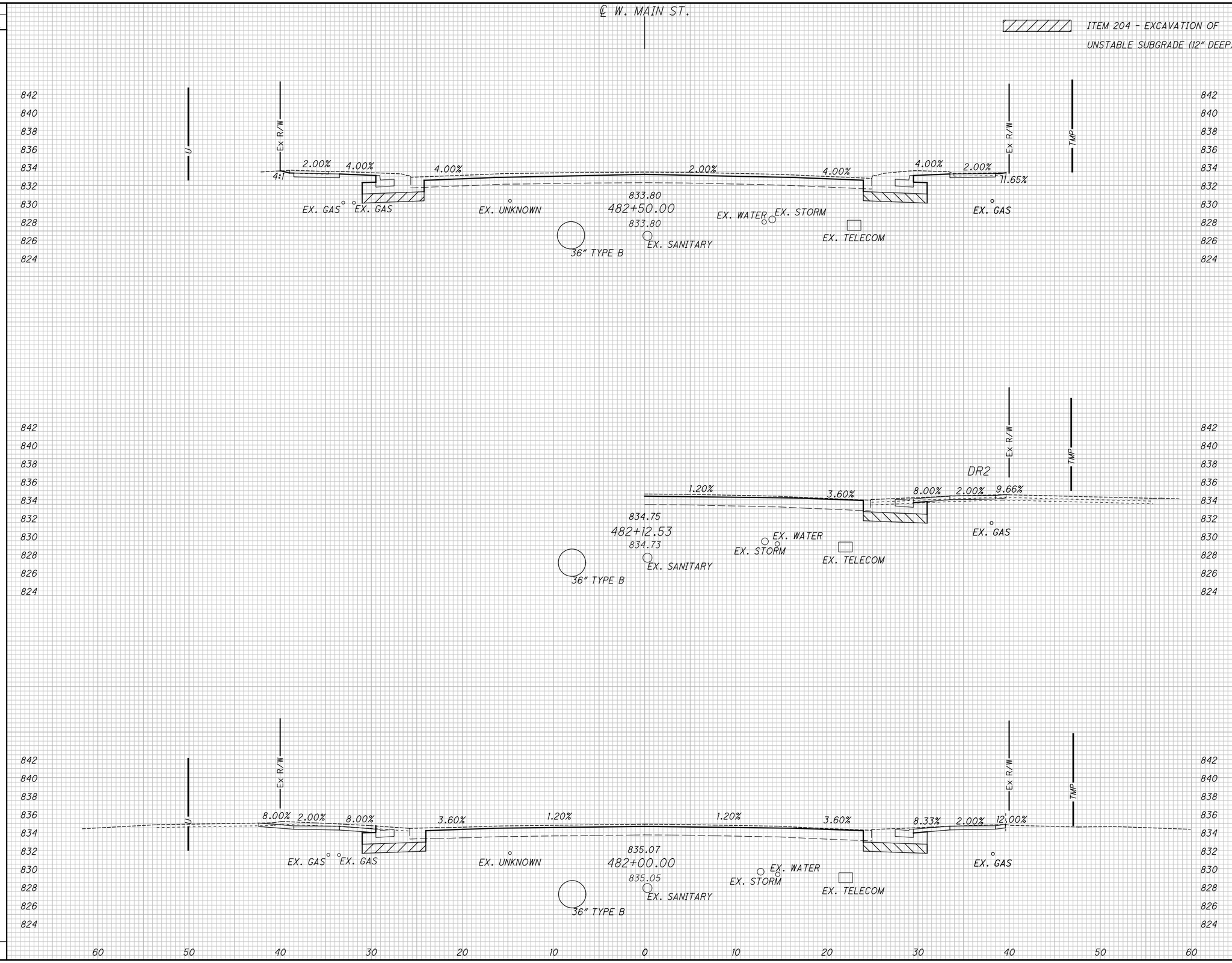

END AREA		VOLUME	
CUT	FILL	CUT	FILL
29			
		44	
18			
		39	
		83	

CALCULATED ATW
CHECKED JDH

CROSS SECTIONS WEST MAIN STREET (SR 41)
STA. 482+00.00 TO STA. 482+50.00

MIA-41-09.49

S:\CIN\4300--4399\4354\004\Drawings\CAD\108662\roadway\sheets\08662XS005.dgn Sheet 2/2/2022 11:36:03 AM Allisonw

SEEDING	
END WIDTH	SQ. YDS.

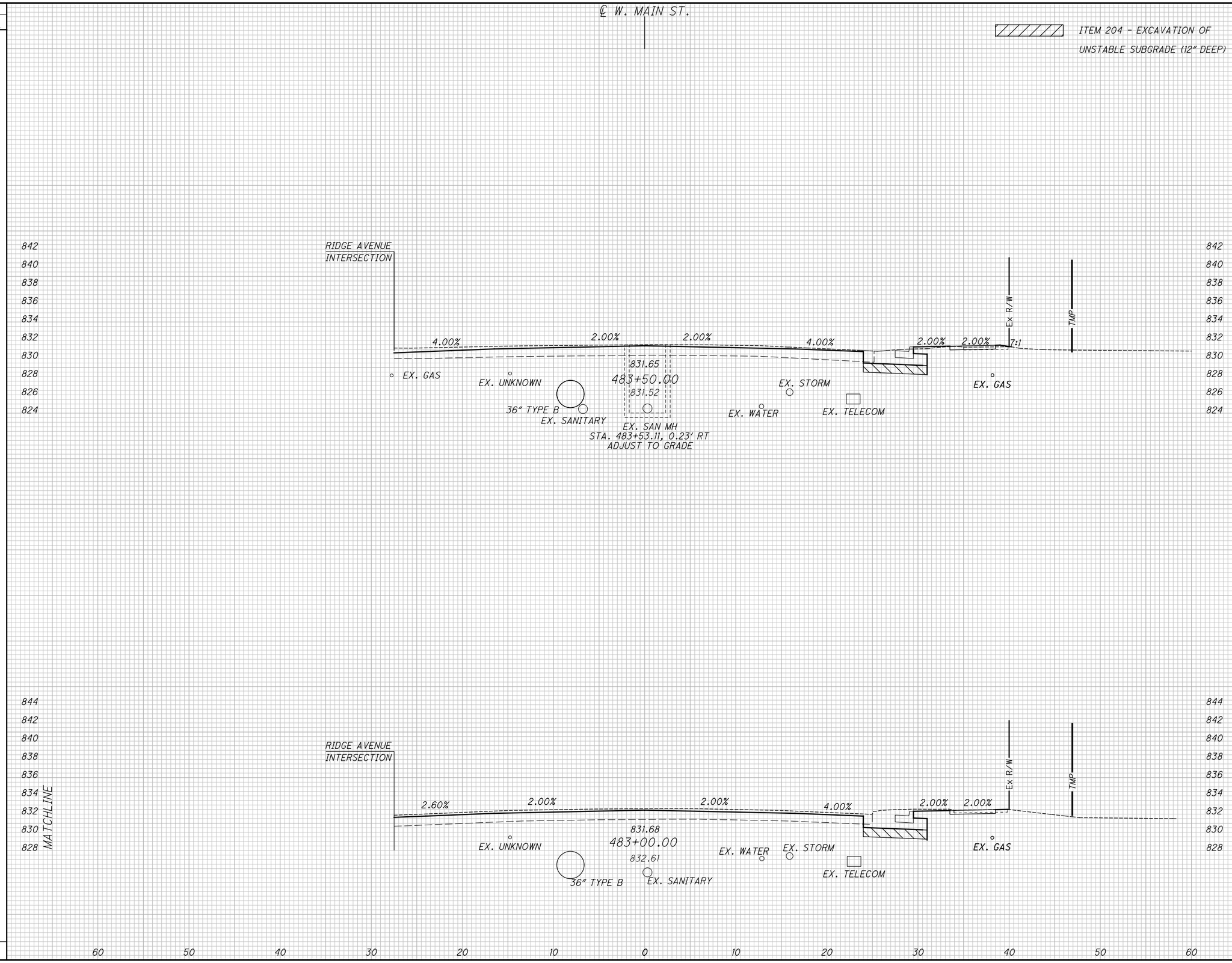

END AREA		VOLUME	
CUT	FILL	CUT	FILL
9	2		
		56	2
51			
		74	1
		130	3

CALCULATED ATW
CHECKED JDH

CROSS SECTIONS WEST MAIN STREET (SR 41)
STA. 483+00.00 TO STA. 483+50.00

MIA-41-09.49

\\strand.com\projects\CIN\4300--4399\4354\004\Drawings\CAD\108662\roadway\sheets\08662XS006.dgn Sheet 2/2/2022 11:36:03 AM Allisonw

SEEDING	
END WIDTH	SQ. YDS.

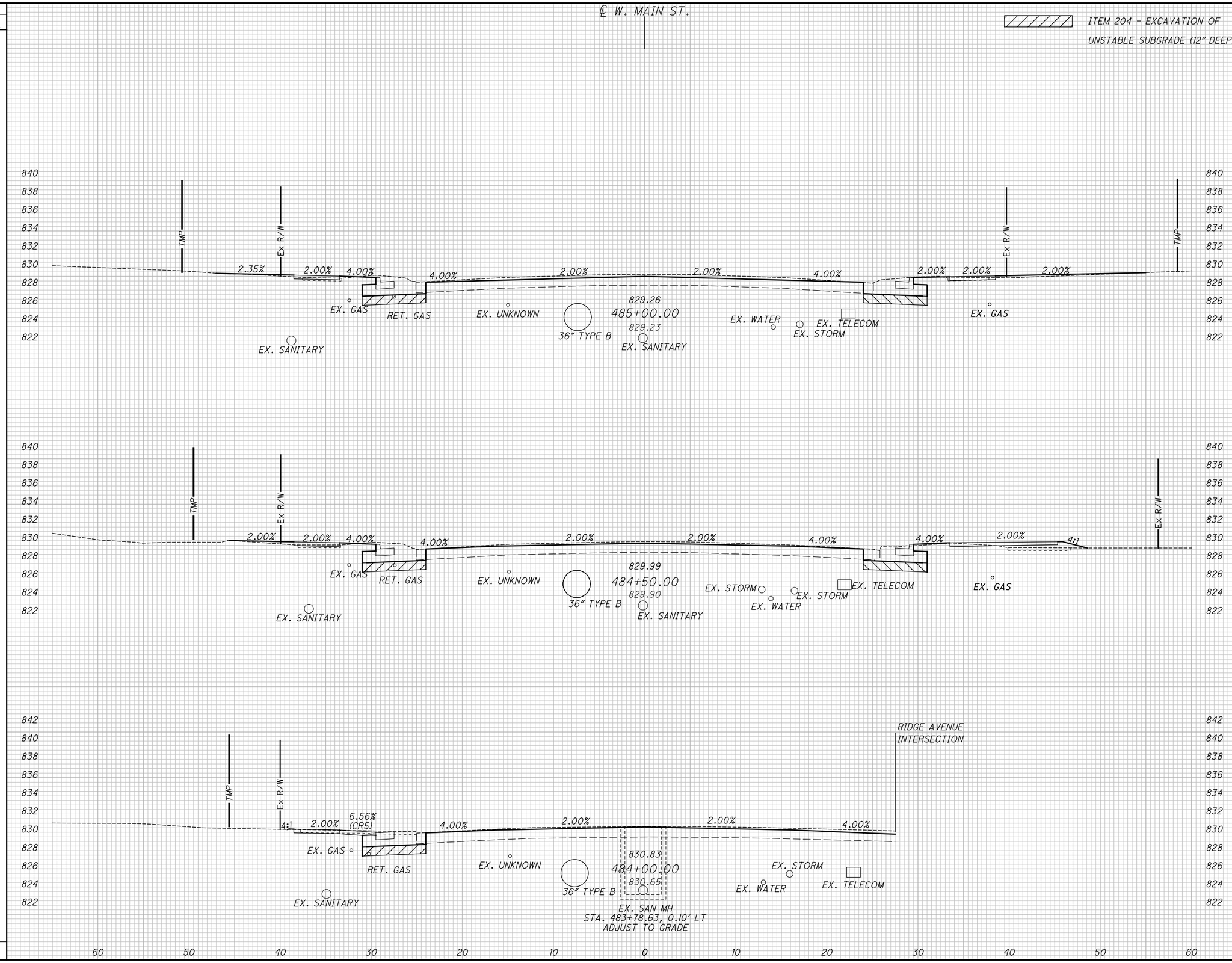

END AREA		VOLUME	
CUT	FILL	CUT	FILL
21	4		
		38	11
20	8		
		27	8
9			
		17	2
		82	21

CALCULATED ATW
CHECKED JDH

CROSS SECTIONS WEST MAIN STREET (SR 41)
STA. 484+00.00 TO STA. 485+00.00

MIA-41-09.49

\\strand.com\projects\CIN\4300--4399\4354\004\Drawings\CAD\108662\roadway\sheets\08662XS007.dgn Sheet 2/2/2022 11:36:03 AM Allisonw

SEEDING	
END WIDTH	SQ. YDS.

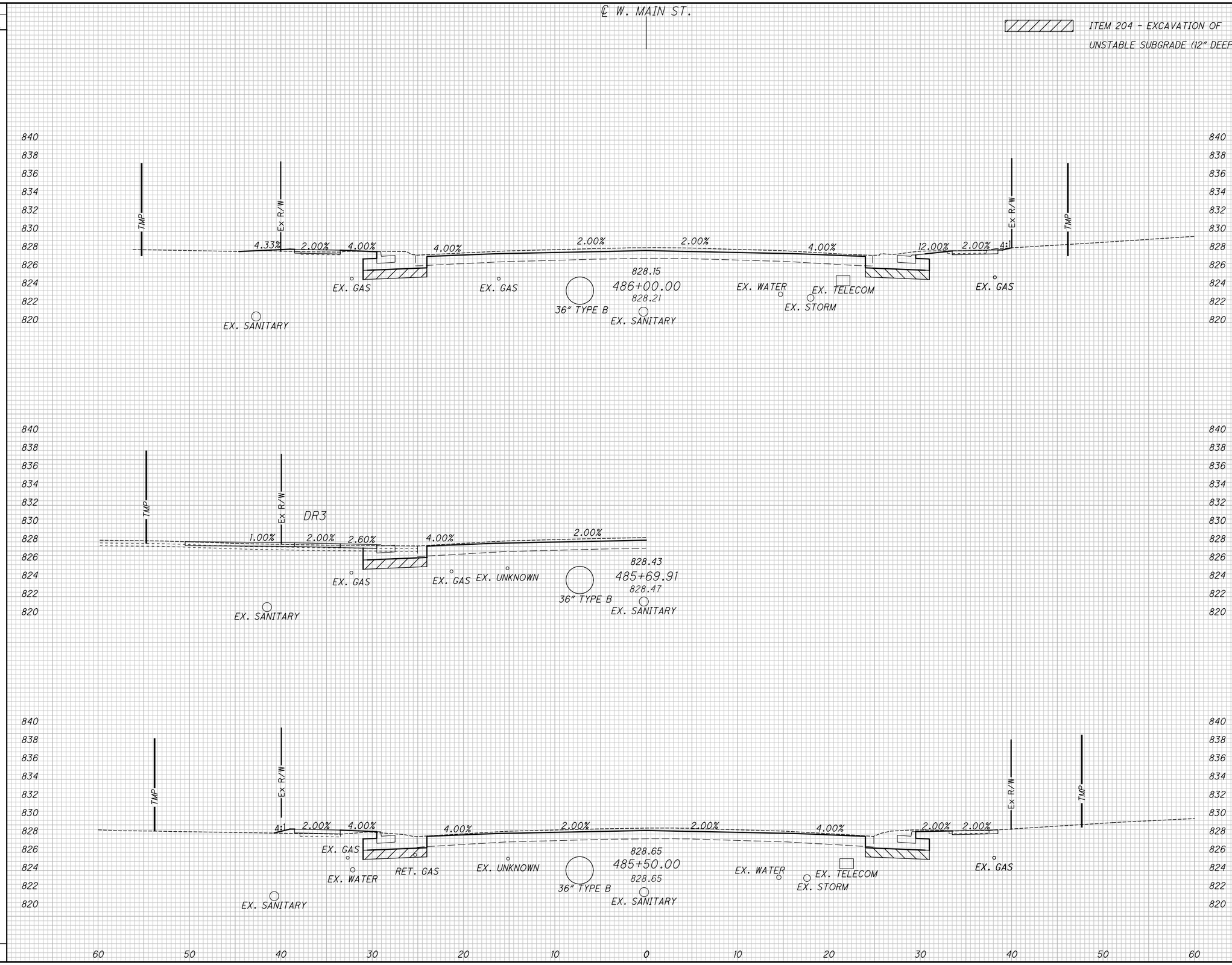

END AREA		VOLUME	
CUT	FILL	CUT	FILL
23	1		
		41	4
21	3		
		39	6
		80	10

CALCULATED ATW
CHECKED JDH

CROSS SECTIONS WEST MAIN STREET (SR 41)
STA. 485+50.00 TO STA. 486+00.00

MIA-41-09.49

\\strand.com\projects\CIN\4300--4399\4354\004\Drawings\CAD\108662\roadway\sheets\08662XS008.dgn Sheet 2/2/2022 11:36:04 AM Allisonw

SEEDING	
END WIDTH	SQ. YDS.

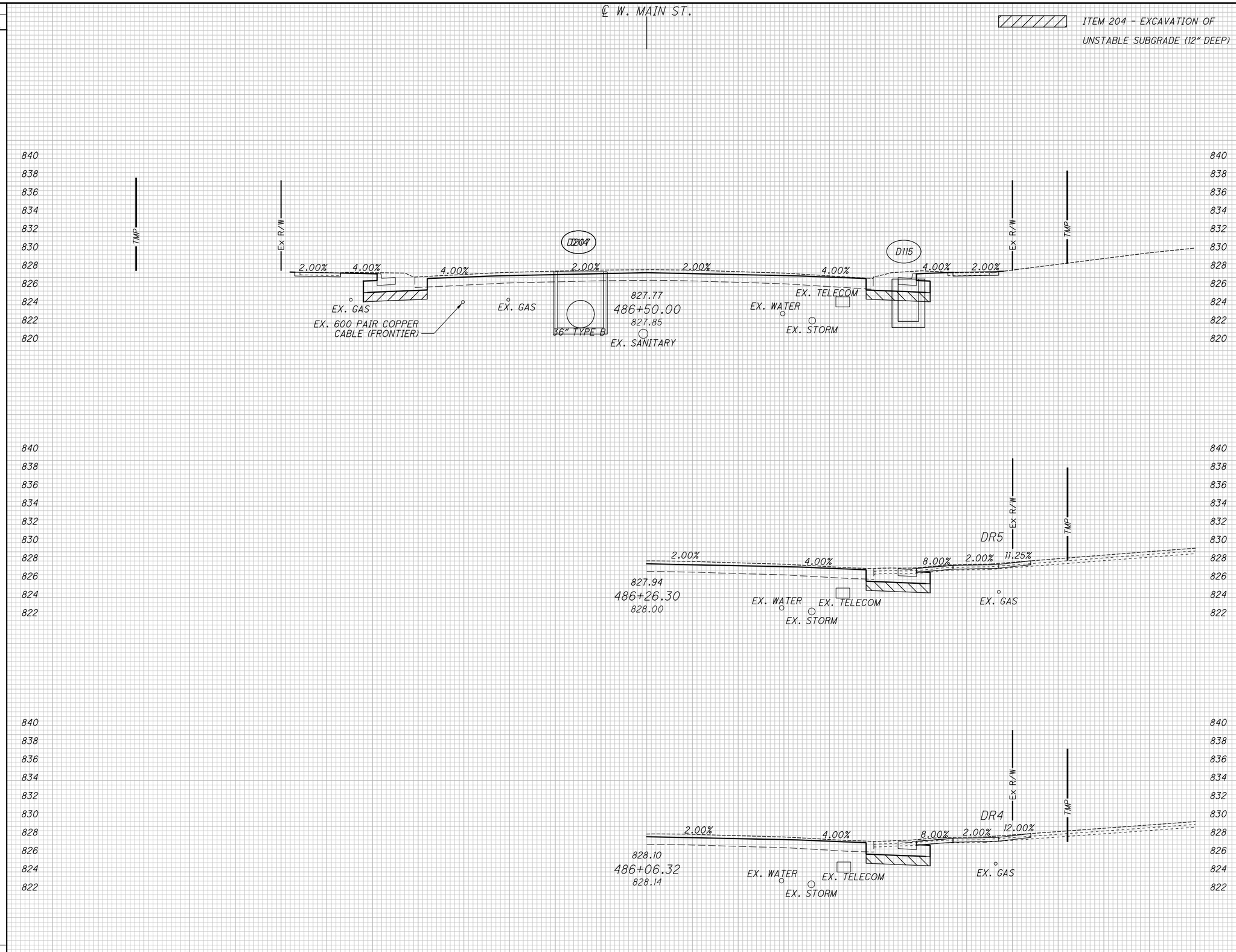

END AREA		VOLUME	
CUT	FILL	CUT	FILL
24	1		
		44	2
		44	2

CALCULATED ATW
CHECKED JDH

CROSS SECTIONS WEST MAIN STREET (SR 41)
STA. 486+06.32 TO STA. 486+50.00

MIA-41-09.49

\\strand.com\projects\CIN\4300-4399\4354\004\Drawings\CAD\108662\roadway\sheets\08662XS009.dgn Sheet 2/2/2022 11:36:04 AM Allisonw

SEEDING	
END WIDTH	SQ. YDS.

END AREA		VOLUME	
CUT	FILL	CUT	FILL

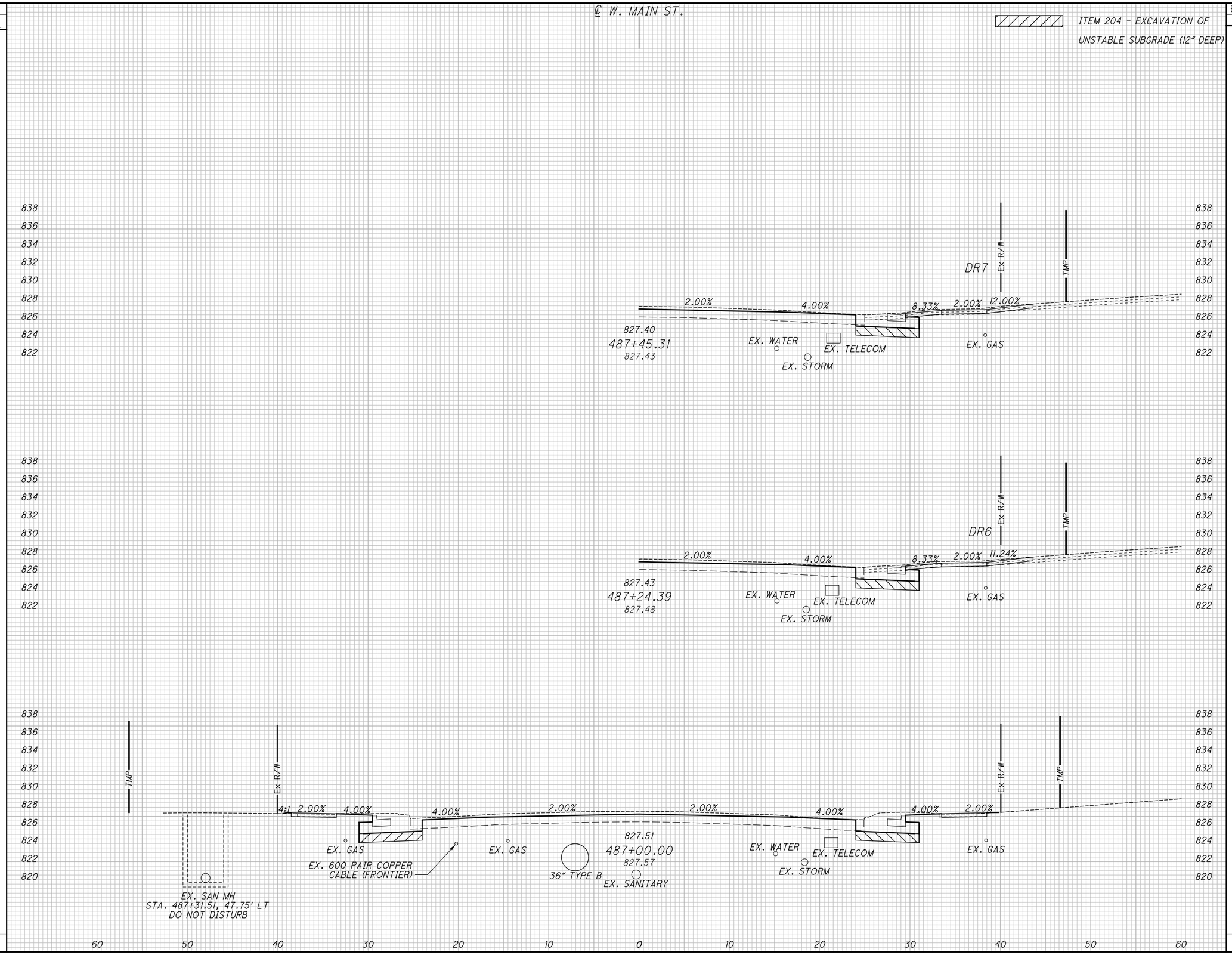

CALCULATED ATW
CHECKED JDH

CROSS SECTIONS WEST MAIN STREET (SR 41)
STA. 487+00.00 TO STA. 487+45.31

MIA-41-09.49

24

44

44

\\strand.com\projects\CIN\4300--4399\4354\004\Drawings\CAD\108662\roadway\sheets\08662XS010.dgn Sheet 2/2/2022 11:36:05 AM Allisonw

SEEDING	
END WIDTH	SQ. YDS.

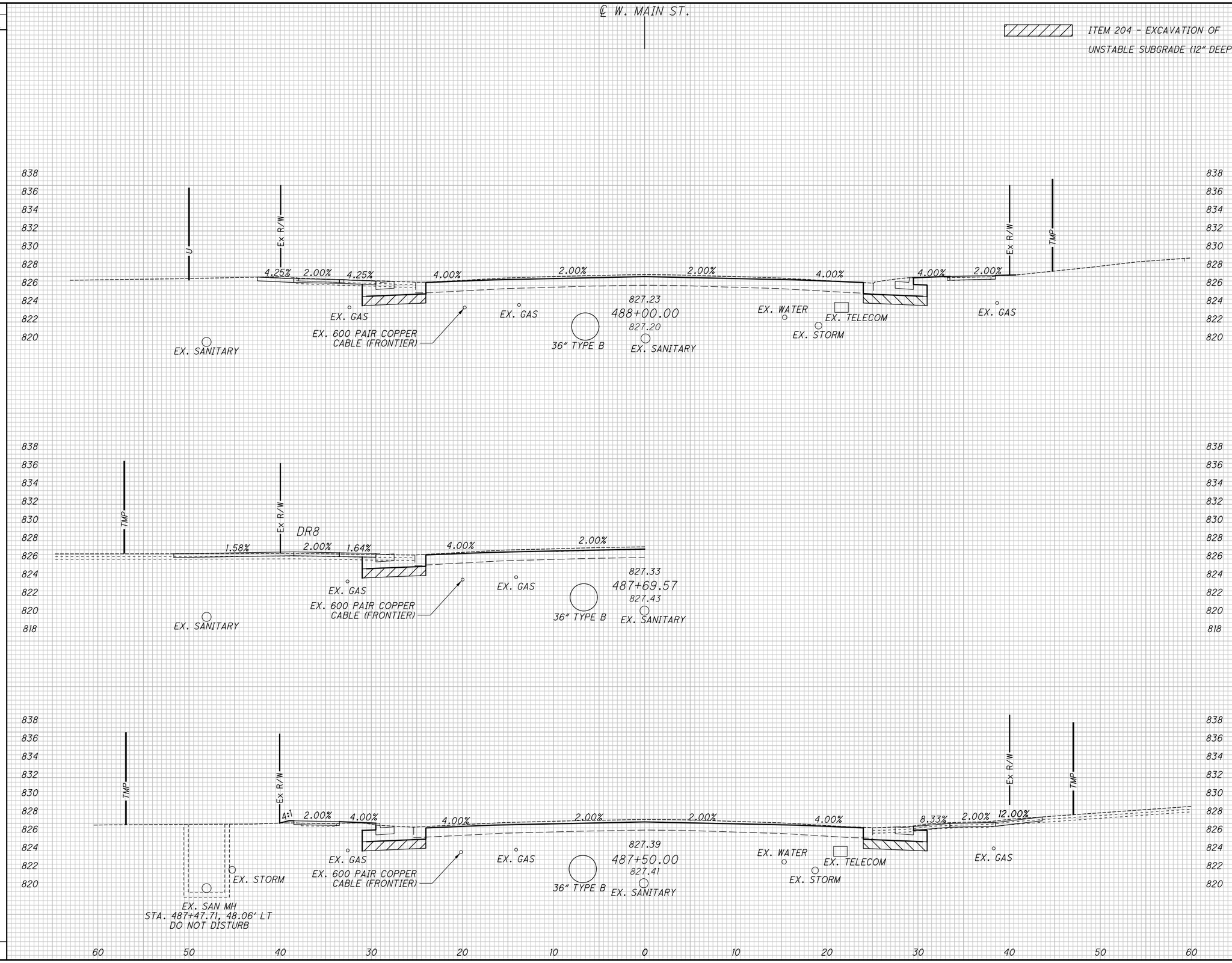

END AREA		VOLUME	
CUT	FILL	CUT	FILL
16			
		29	2
15	1		
		36	2
		65	4

CALCULATED ATW
CHECKED JDH

CROSS SECTIONS WEST MAIN STREET (SR 41)
STA. 487+50.00 TO STA. 488+00.00

MIA-41-09.49

\\strand.com\projects\CIN\4300--4399\4354\004\Drawings\CAD\108662\roadway\sheets\08662XS011.dgn Sheet 2/2/2022 11:36:05 AM Alisonw

SEEDING	
END WIDTH	SQ. YDS.

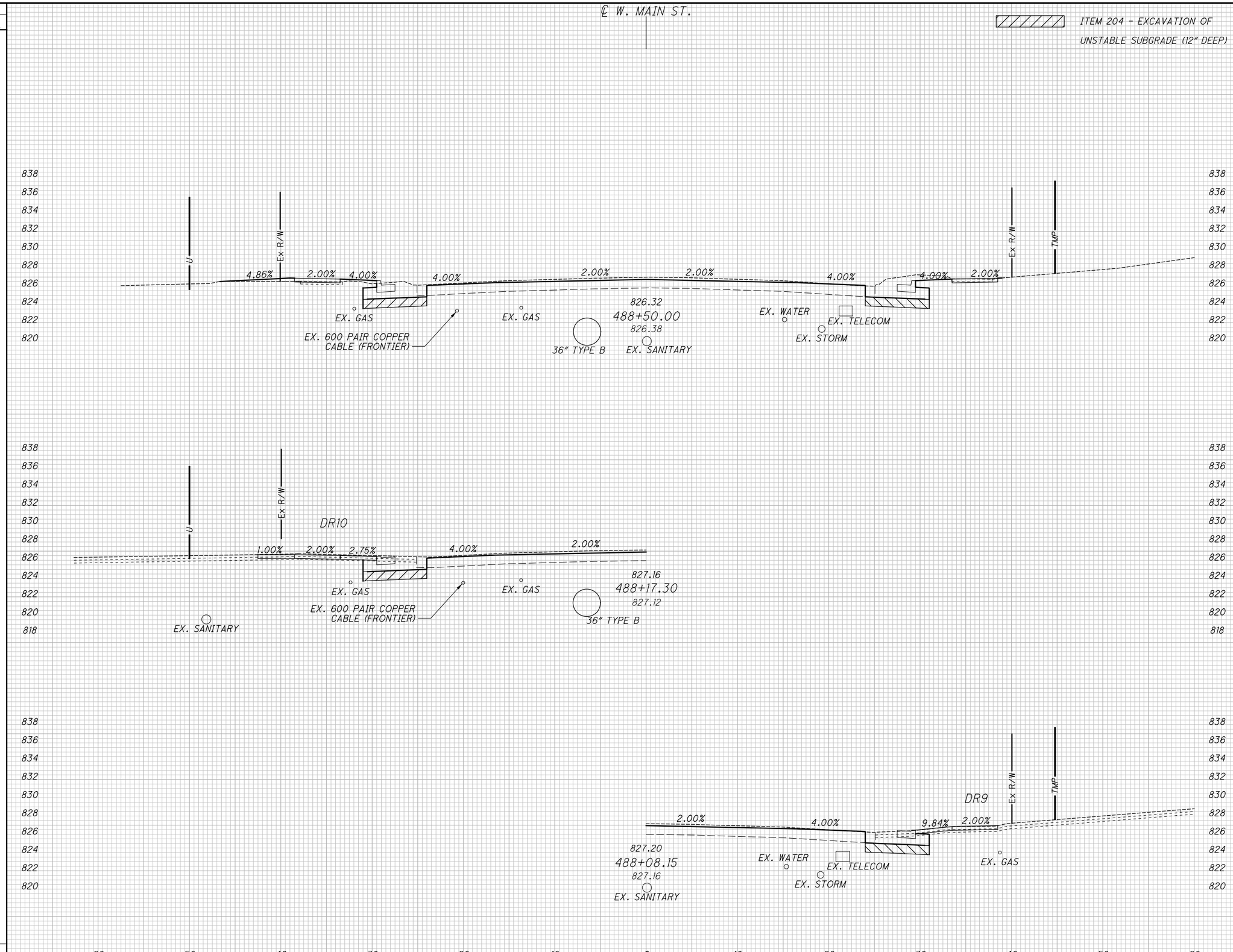

END AREA		VOLUME	
CUT	FILL	CUT	FILL
23	4		
		36	5
		36	5

CALCULATED ATW
CHECKED JDH

CROSS SECTIONS WEST MAIN STREET (SR 41)
STA. 488+08.15 TO STA. 488+50.00

MIA-41-09.49

\\strand.com\projects\CIN\4300-4399\4354\004\Drawings\CAD\108662\roadway\sheets\08662XS012.dgn Sheet 2/2/2022 11:36:06 AM Allisonw

SEEDING	
END WIDTH	SQ. YDS.

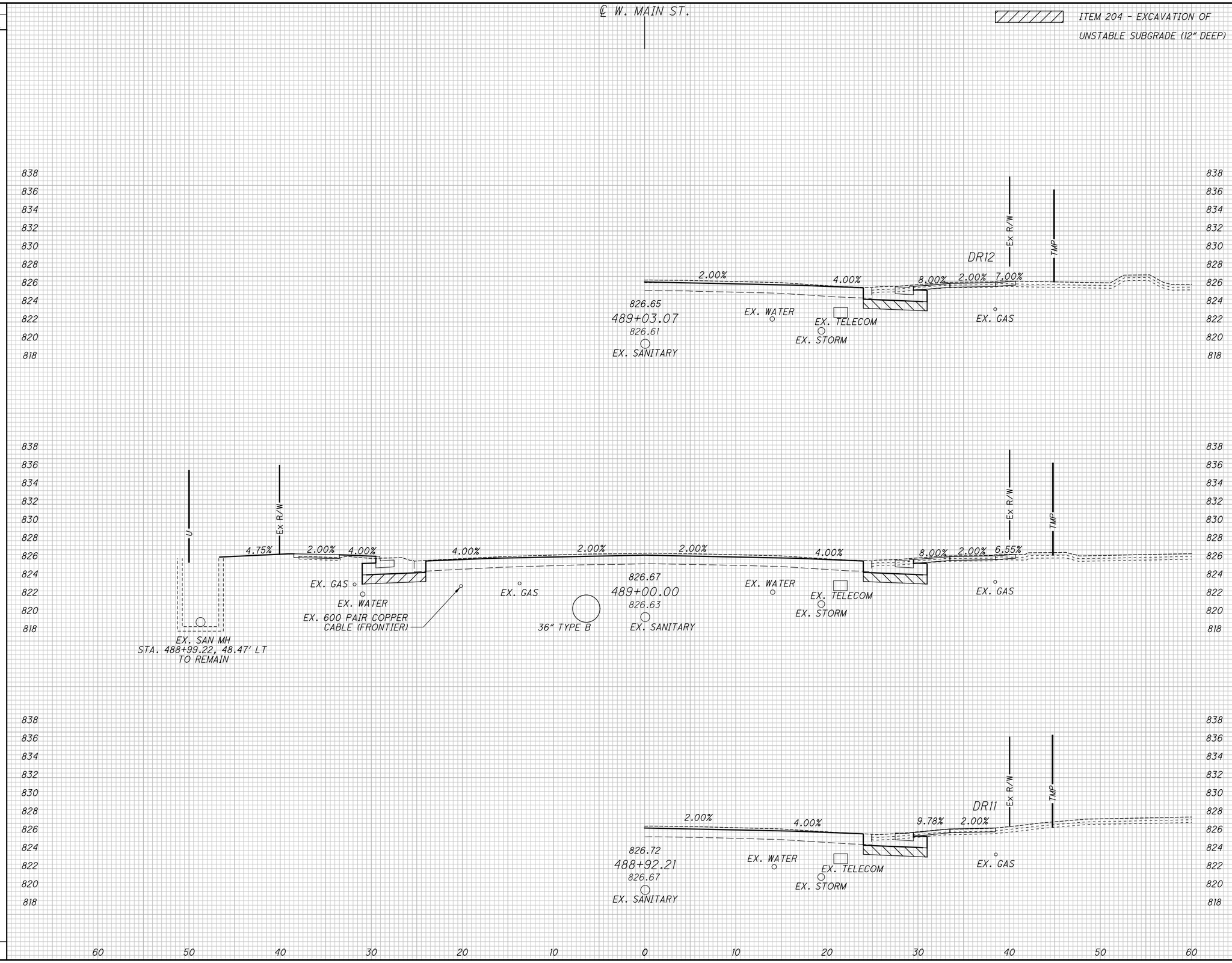

END AREA		VOLUME	
CUT	FILL	CUT	FILL
15	2		
		35	6
		35	6

CALCULATED ATW
CHECKED JDH

CROSS SECTIONS WEST MAIN STREET (SR 41)
STA. 488+92.21 TO STA. 489+03.07

MIA-41-09.49

\\strand.com\projects\CIN\4300--4399\4354\004\Drawings\CAD\108662\roadway\sheets\08662XS013.dgn Sheet 2/2/2022 11:36:06 AM Allisonw

SEEDING	
END WIDTH	SQ. YDS.

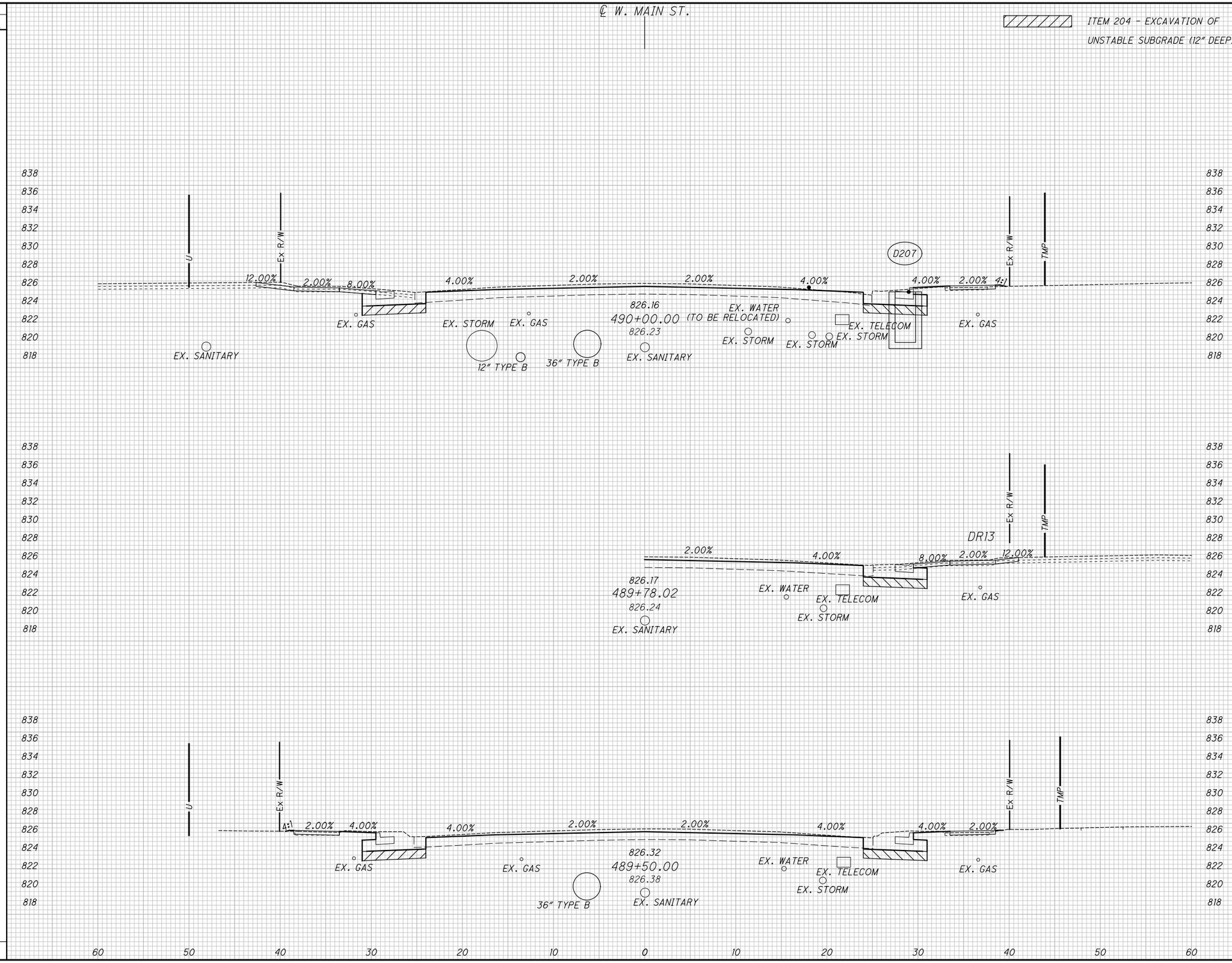

END AREA		VOLUME	
CUT	FILL	CUT	FILL
16	1		
		35	2
22			
		34	1
		69	3

CALCULATED ATW
CHECKED JDH

CROSS SECTIONS WEST MAIN STREET (SR 41)
STA. 489+50.00 TO STA. 490+00.00

MIA-41-09.49

\\strand.com\projects\CIN\4300--4399\4354\004\Drawings\CAD\108662\roadway\sheets\08662XS014.dgn Sheet 2/2/2022 11:36:06 AM Allisonw

SEEDING	
END WIDTH	SQ. YDS.

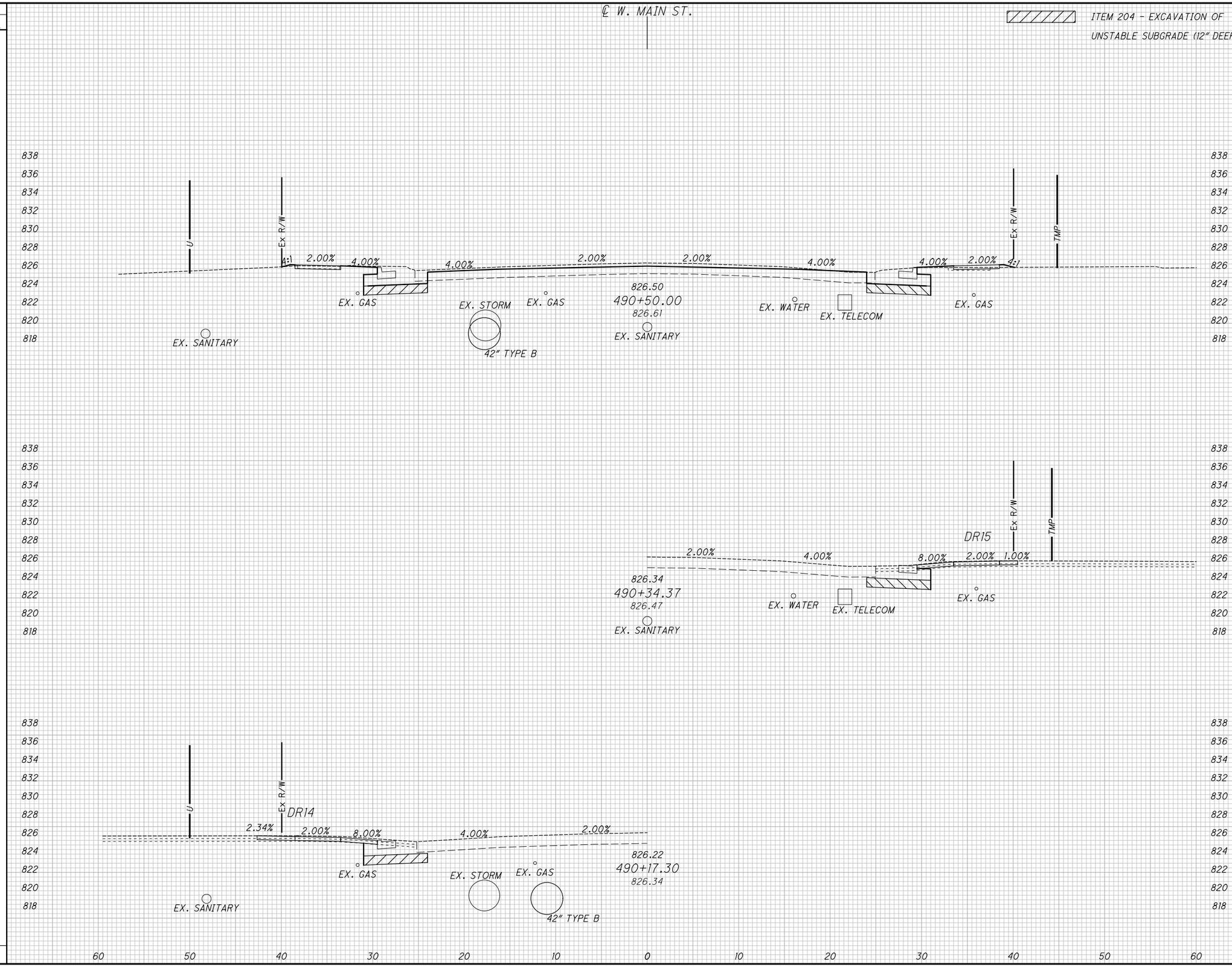

END AREA		VOLUME	
CUT	FILL	CUT	FILL
21	1		
		34	2
		34	2

CALCULATED ATW
CHECKED JDH

CROSS SECTIONS WEST MAIN STREET (SR 41)
STA. 490+17.30 TO STA. 490+50.00

MIA-41-09.49

\\strand.com\projects\CIN\4300--4399\4354\004\Drawings\CAD\108662\roadway\sheets\08662XS015.dgn Sheet 2/2/2022 11:36:07 AM Allisonw

SEEDING	
END WIDTH	SQ. YDS.

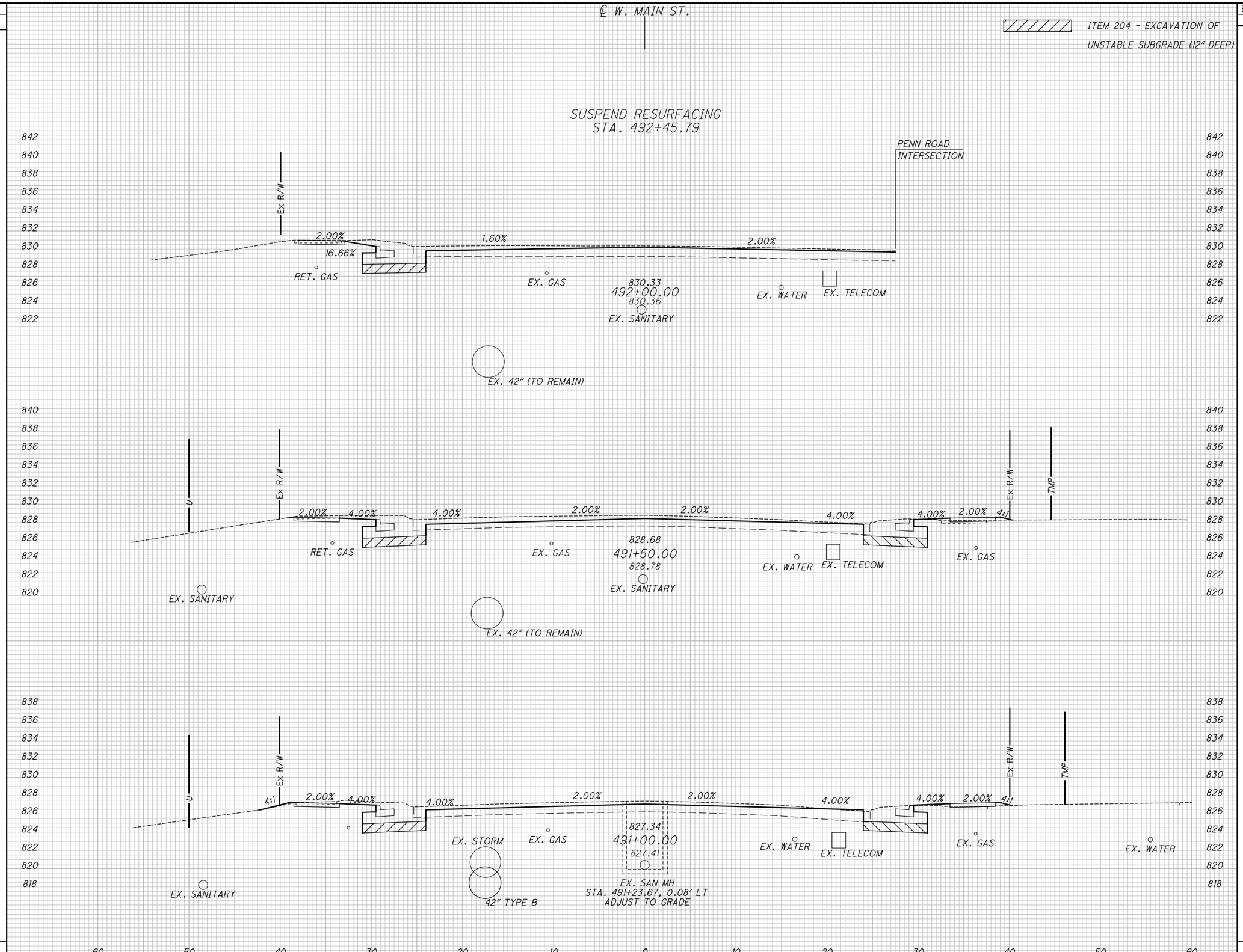

END AREA		VOLUME	
CUT	FILL	CUT	FILL
15		38	3
26	2	46	5
24	3	42	4
		126	12

CALCULATED ATW
CHECKED JDH

CROSS SECTIONS WEST MAIN STREET (SR 41)
STA. 491+00.00 TO STA. 492+00.00

MIA-41-09.49

\\strand.com\projects\CIN\4300--4399\4354\004\Drawings\CAD\108662\roadway\sheets\08662XS016.dgn Sheet 2/2/2022 11:36:07 AM Allisonw

SEEDING	
END WIDTH	SQ. YDS.

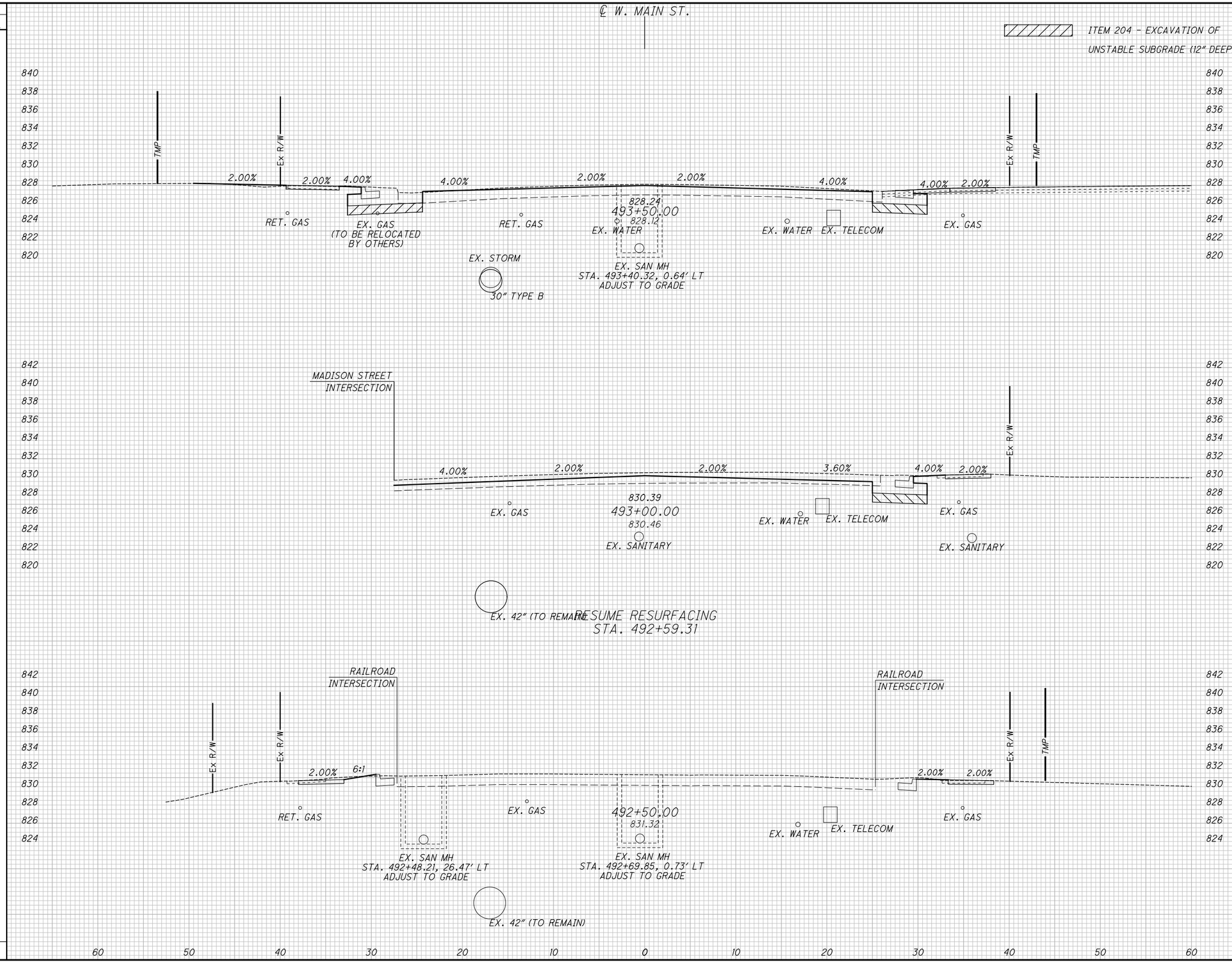

END AREA		VOLUME	
CUT	FILL	CUT	FILL
15	1		
		24	1
11			
		12	
2			
		16	
		52	1

CALCULATED ATW
CHECKED JDH

CROSS SECTIONS WEST MAIN STREET (SR 41)
STA. 492+50.00 TO STA. 493+50.00

MIA-41-09.49

\\strand.com\projects\CIN\4300--4399\4354\004\Drawings\CAD\108662\roadway\sheets\08662XS017.dgn Sheet 2/2/2022 11:36:08 AM Allisonw

SEEDING	
END WIDTH	SQ. YDS.

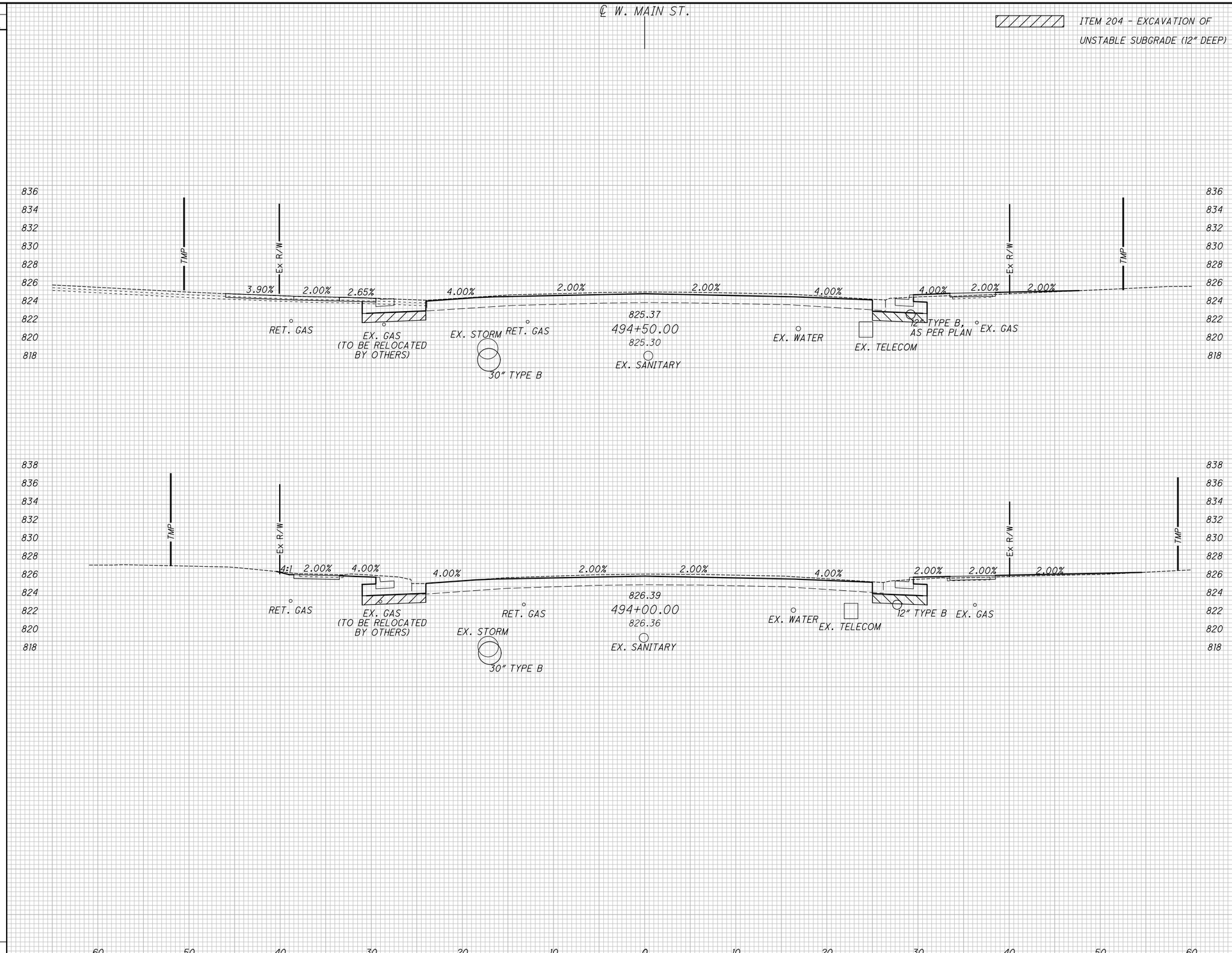

END AREA		VOLUME	
CUT	FILL	CUT	FILL
13	3		
		30	6
19	3		
		31	4
		61	10

CALCULATED ATW
CHECKED JDH

CROSS SECTIONS WEST MAIN STREET (SR 41)
STA. 493+56.20 TO STA. 494+50.00

MIA-41-09.49

\\strand.com\projects\CIN\4300--4399\4354\004\Drawings\CAD\108662\roadway\sheets\08662XS018.dgn Sheet 2/2/2022 11:36:08 AM Allisonw

SEEDING	
END WIDTH	SQ. YDS.

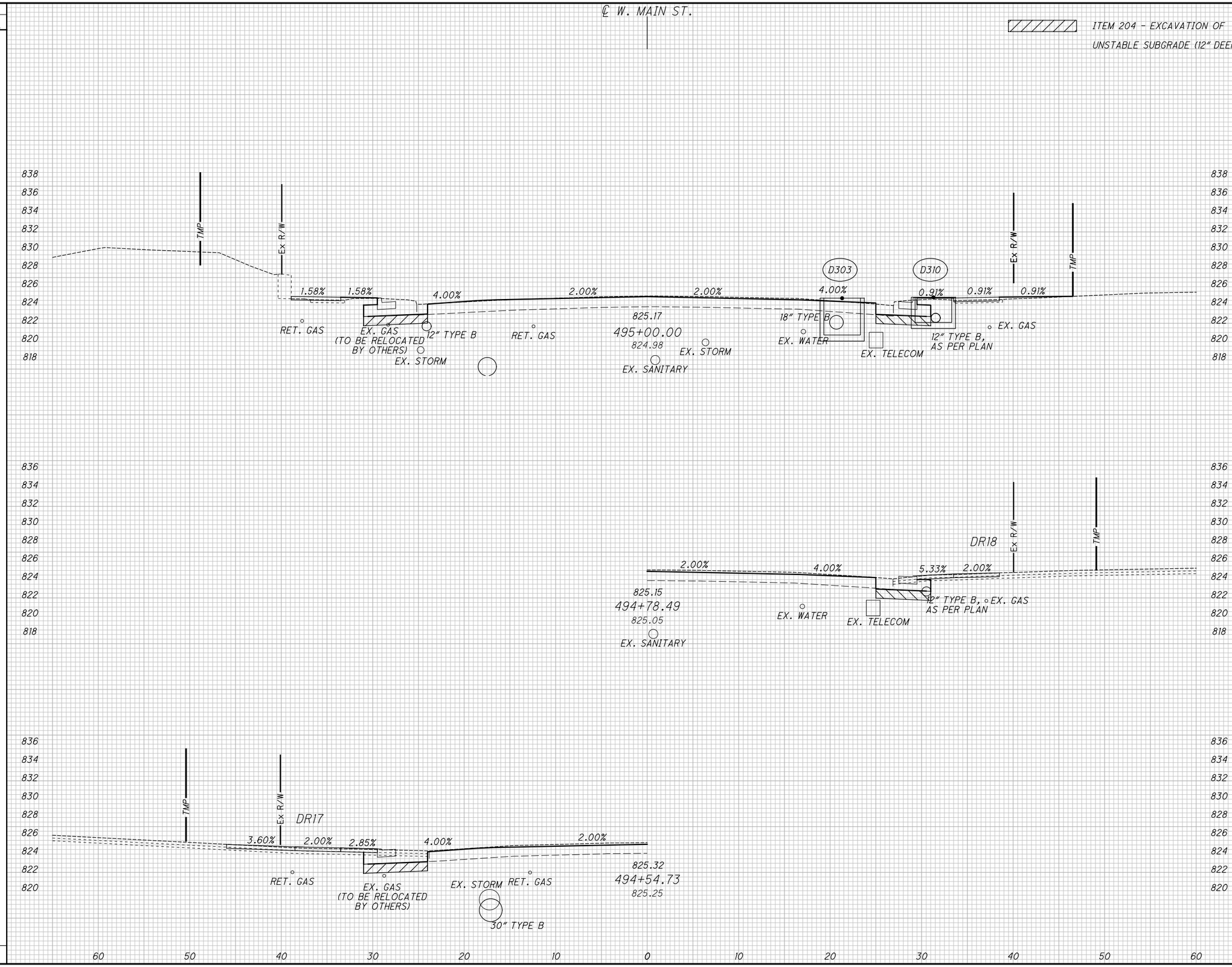

END AREA		VOLUME	
CUT	FILL	CUT	FILL
16	5		
		27	7
		27	7

CALCULATED ATW
CHECKED JDH

CROSS SECTIONS WEST MAIN STREET (SR 41)
STA. 494+54.73 TO STA. 495+00.00

MIA-41-09.49

\\strand.com\projects\CIN\4300--4399\4354\004\Drawings\CAD\108662\roadway\sheets\08662XS019.dgn Sheet 2/2/2022 11:36:09 AM Allisonw

SEEDING	
END WIDTH	SQ. YDS.

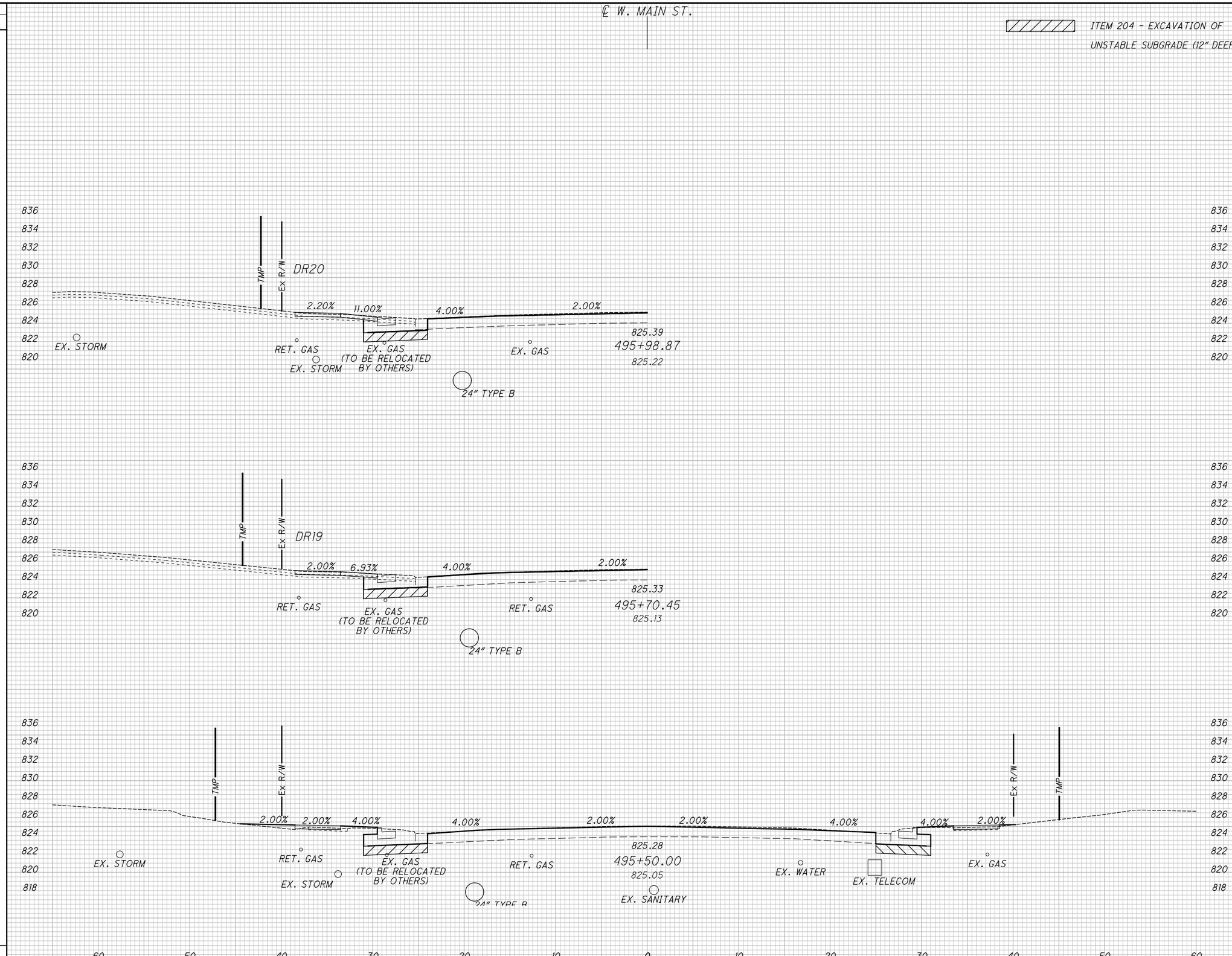

END AREA		VOLUME	
CUT	FILL	CUT	FILL
16	4		
		30	8
		30	8

CALCULATED ATW
CHECKED JDH

CROSS SECTIONS WEST MAIN STREET (SR 41)
STA. 495+50.00 TO STA. 495+98.87

MIA-41-09.49

\\strand.com\projects\CIN\4300-4399\4354\004\Drawings\CAD\108662\roadway\sheets\08662XS020.dgn Sheet 2/2/2022 11:36:09 AM Allisonw

SEEDING	
END WIDTH	SQ. YDS.

END AREA		VOLUME	
CUT	FILL	CUT	FILL
		20	
9			
13			
27	1		
47	1		

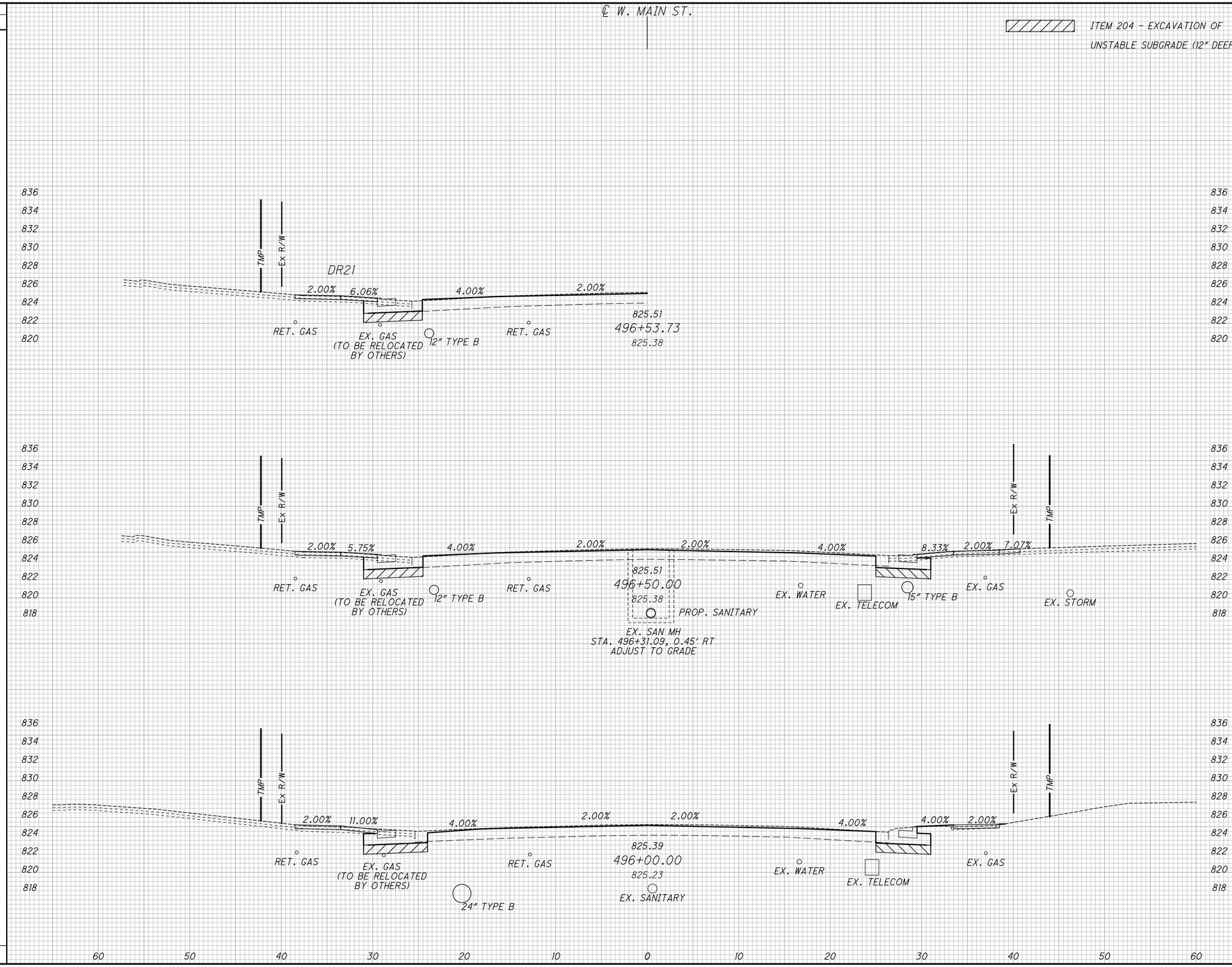

CALCULATED ATW
CHECKED JDH

CROSS SECTIONS WEST MAIN STREET (SR 41)
STA. 496+00.00 TO STA. 496+53.73

MIA-41-09.49

\\strand.com\projects\CIN\4300--4399\4354\004\Drawings\CAD\108662\roadway\sheets\08662XS021.dgn Sheet 2/2/2022 11:36:09 AM Allisonw

SEEDING		END AREA		VOLUME	
END WIDTH	SQ. YDS.	CUT	FILL	CUT	FILL

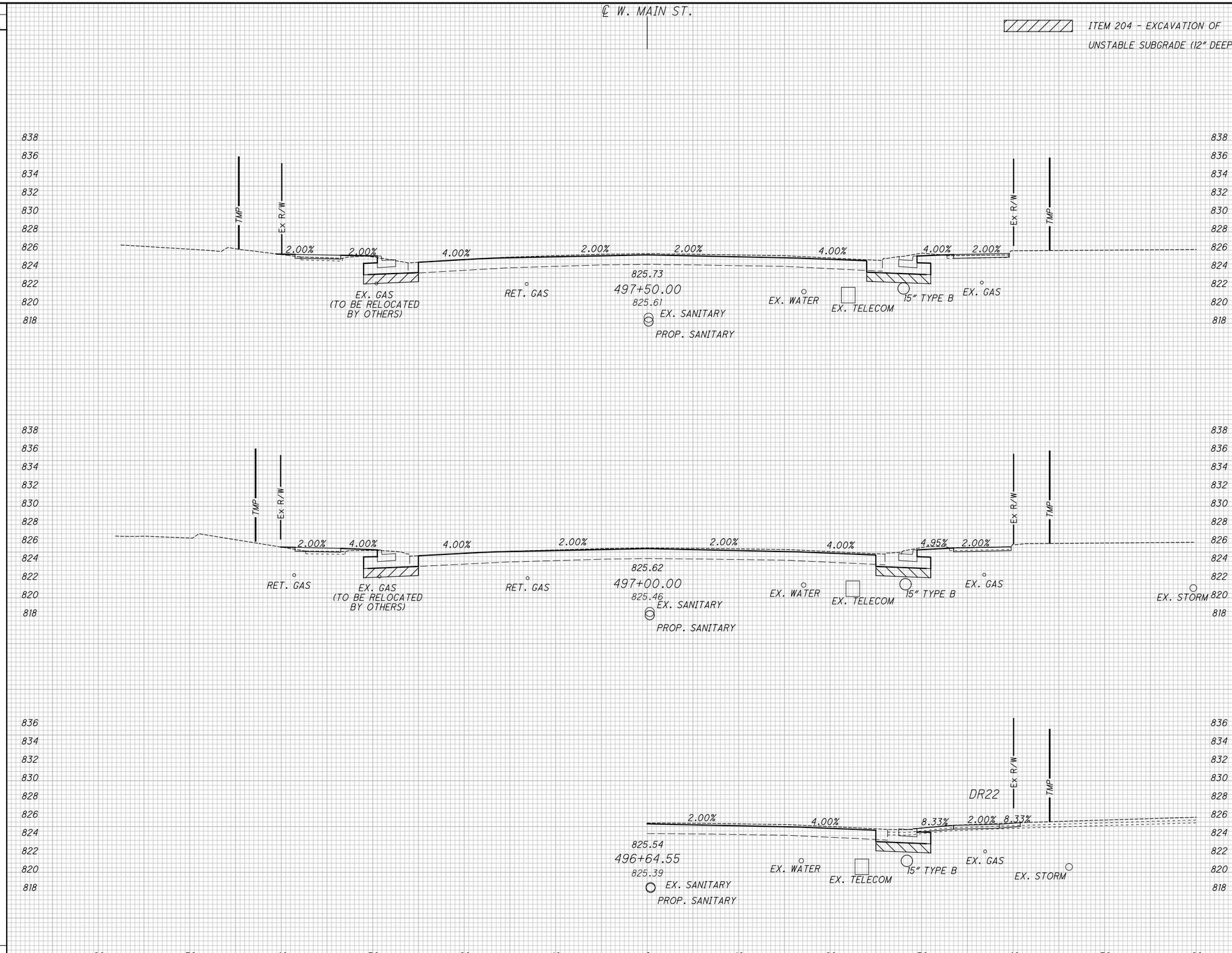

END AREA CUT	END AREA FILL	VOLUME CUT	VOLUME FILL
17	2	32	4
18	2	25	2
		57	6

CALCULATED ATW
CHECKED JDH

CROSS SECTIONS WEST MAIN STREET (SR 41)
STA. 496+64.55 TO STA. 497+50.00

MIA-41-09.49

\\strand.com\projects\CIN\4300--4399\4354\004\Drawings\CAD\108662\roadway\sheets\08662XS023.dgn Sheet 2/2/2022 11:36:10 AM Allisonw

SEEDING	
END WIDTH	SQ. YDS.

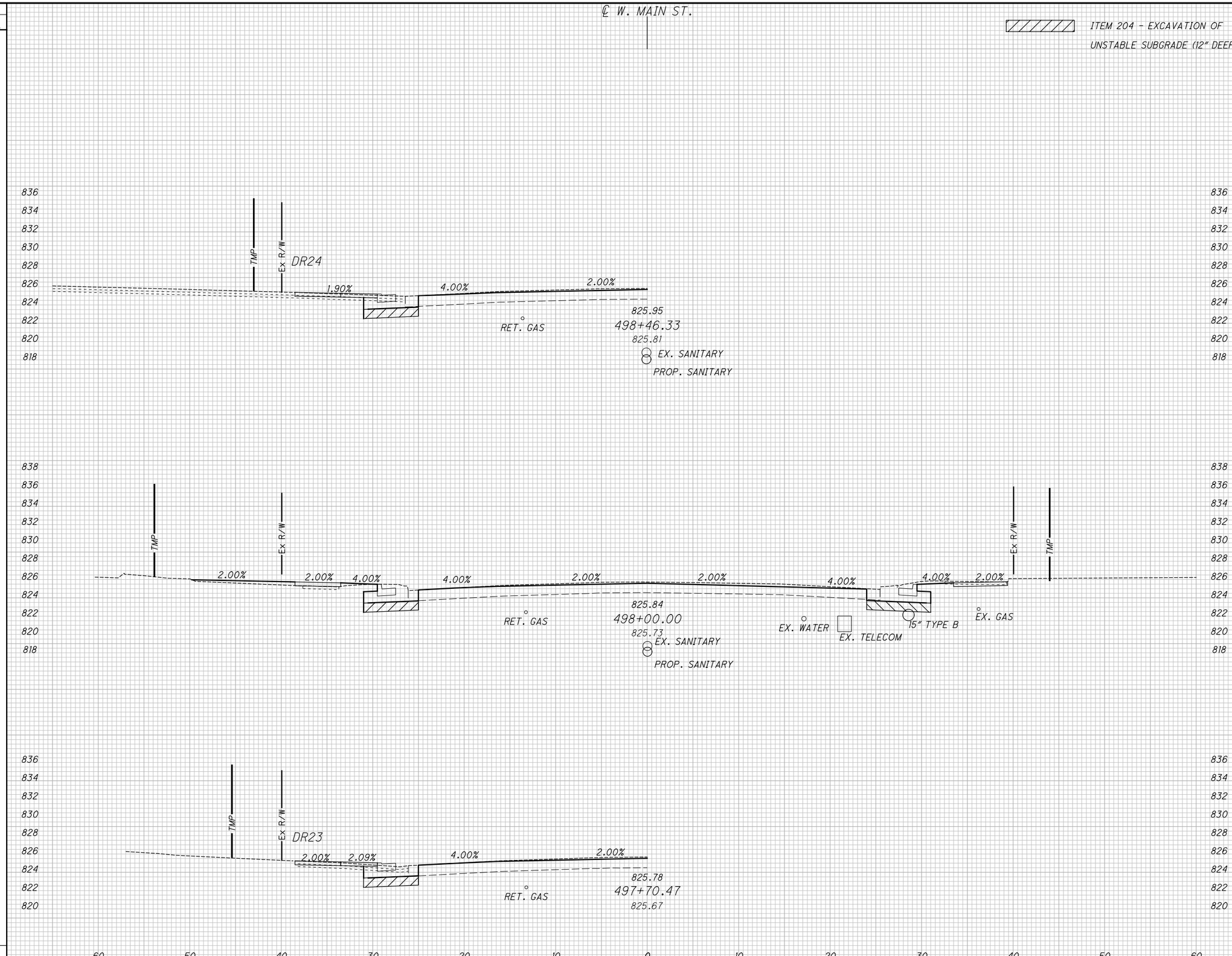

END AREA		VOLUME	
CUT	FILL	CUT	FILL
20	5		
		34	6
		34	6

CALCULATED ATW
CHECKED JDH

CROSS SECTIONS WEST MAIN STREET (SR 41)
STA. 497+70.47 TO STA. 498+46.33

MIA-41-09.49

\\strand.com\projects\CIN\4300-4399\4354\004\Drawings\CAD\108662\roadway\sheets\08662XS024.dgn Sheet 2/2/2022 11:36:10 AM Allisonw

SEEDING	
END WIDTH	SQ. YDS.

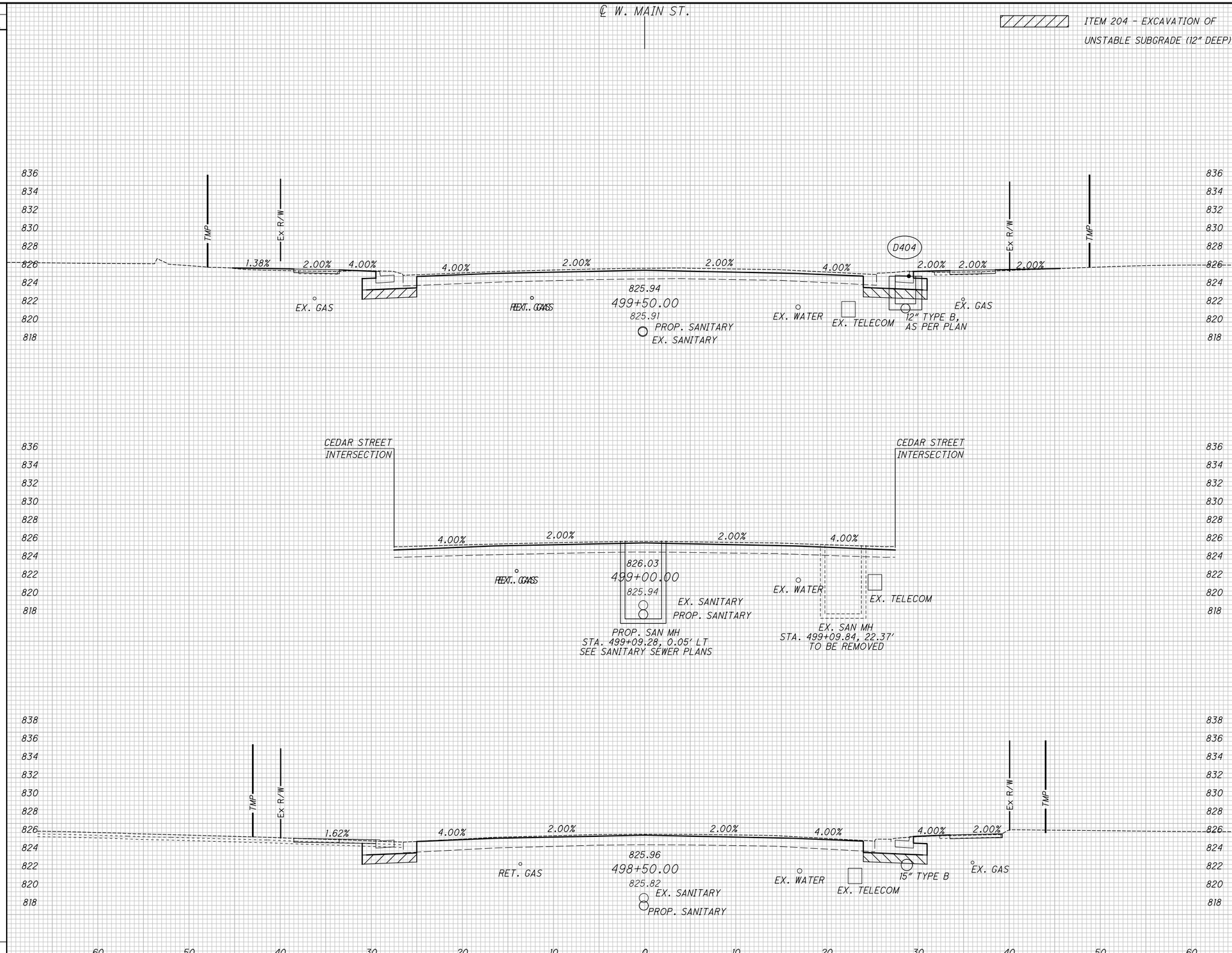

END AREA		VOLUME	
CUT	FILL	CUT	FILL
18	3		
		18	1
1	1		
		13	1
13			
		31	
		62	2

CALCULATED ATW
CHECKED JDH

CROSS SECTIONS WEST MAIN STREET (SR 41)
STA. 498+50.00 TO STA. 499+50.00

MIA-41-09.49

\\strand.com\projects\CIN\4300-4399\4354\004\Drawings\CAD\108662\roadway\sheets\08662XS025.dgn Sheet 2/2/2022 11:36:11 AM Allisonw

SEEDING	
END WIDTH	SQ. YDS.

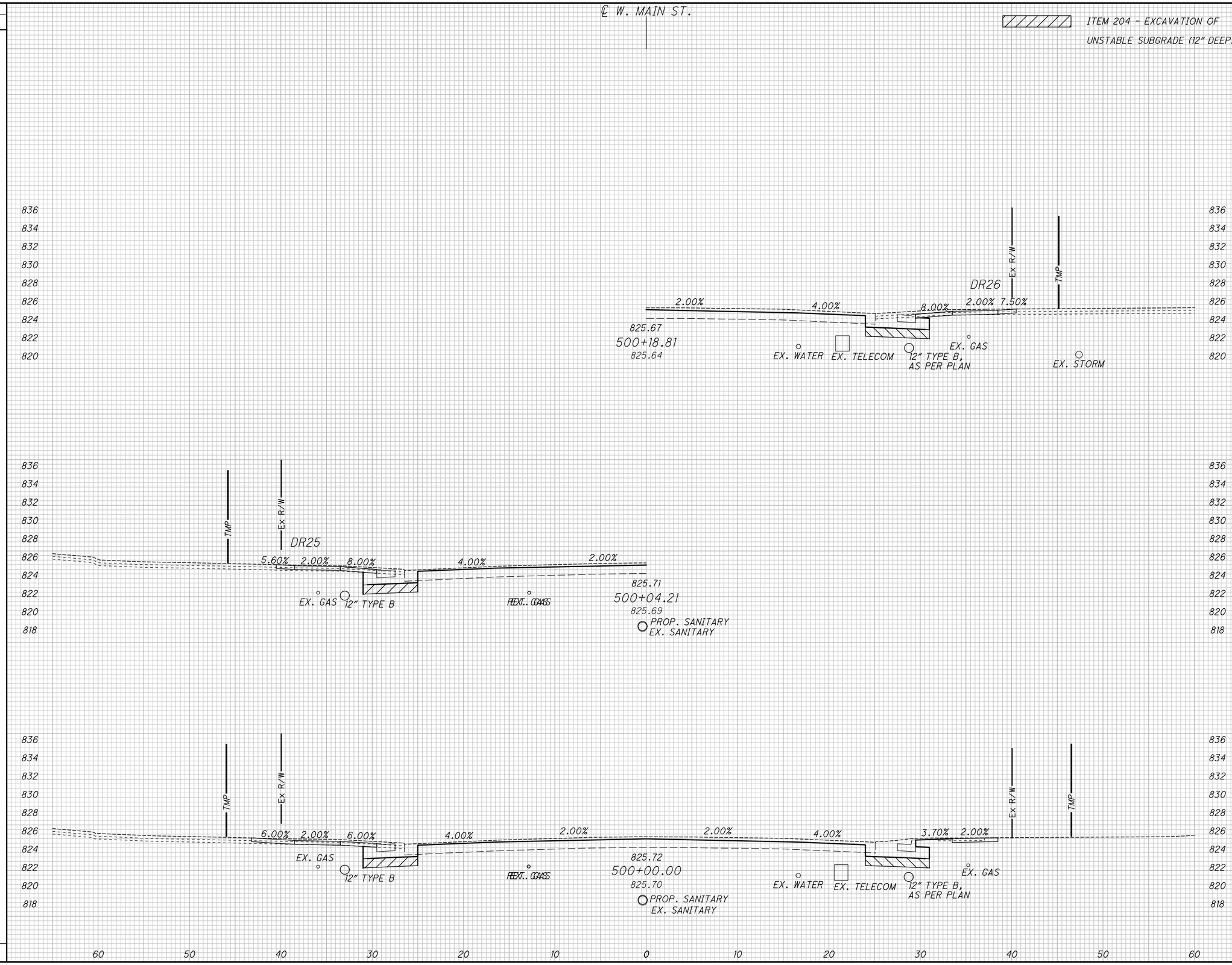

END AREA		VOLUME	
CUT	FILL	CUT	FILL

SEEDING	
END WIDTH	SQ. YDS.

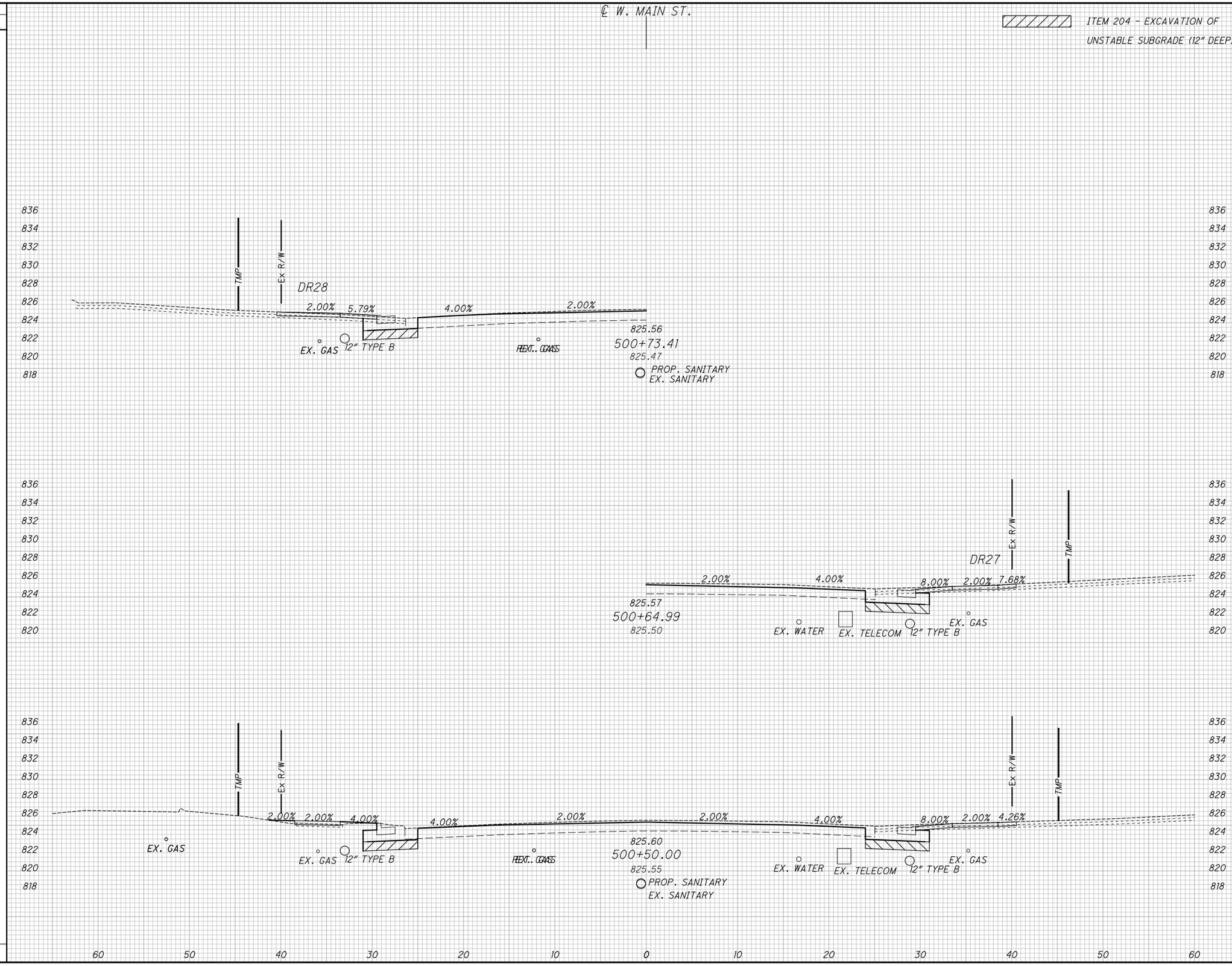

END AREA		VOLUME	
CUT	FILL	CUT	FILL
14	2		
		30	3
		30	3

CALCULATED ATW
CHECKED JDH

CROSS SECTIONS WEST MAIN STREET (SR 41)
STA. 500+50.00 TO STA. 500+73.41

MIA-41-09.49

\\strand.com\projects\CIN\4300--4399\4354\004\Drawings\CAD\108662\roadway\sheets\08662XS027.dgn Sheet 2/2/2022 11:36:11 AM Allisonw

SEEDING	
END WIDTH	SQ. YDS.

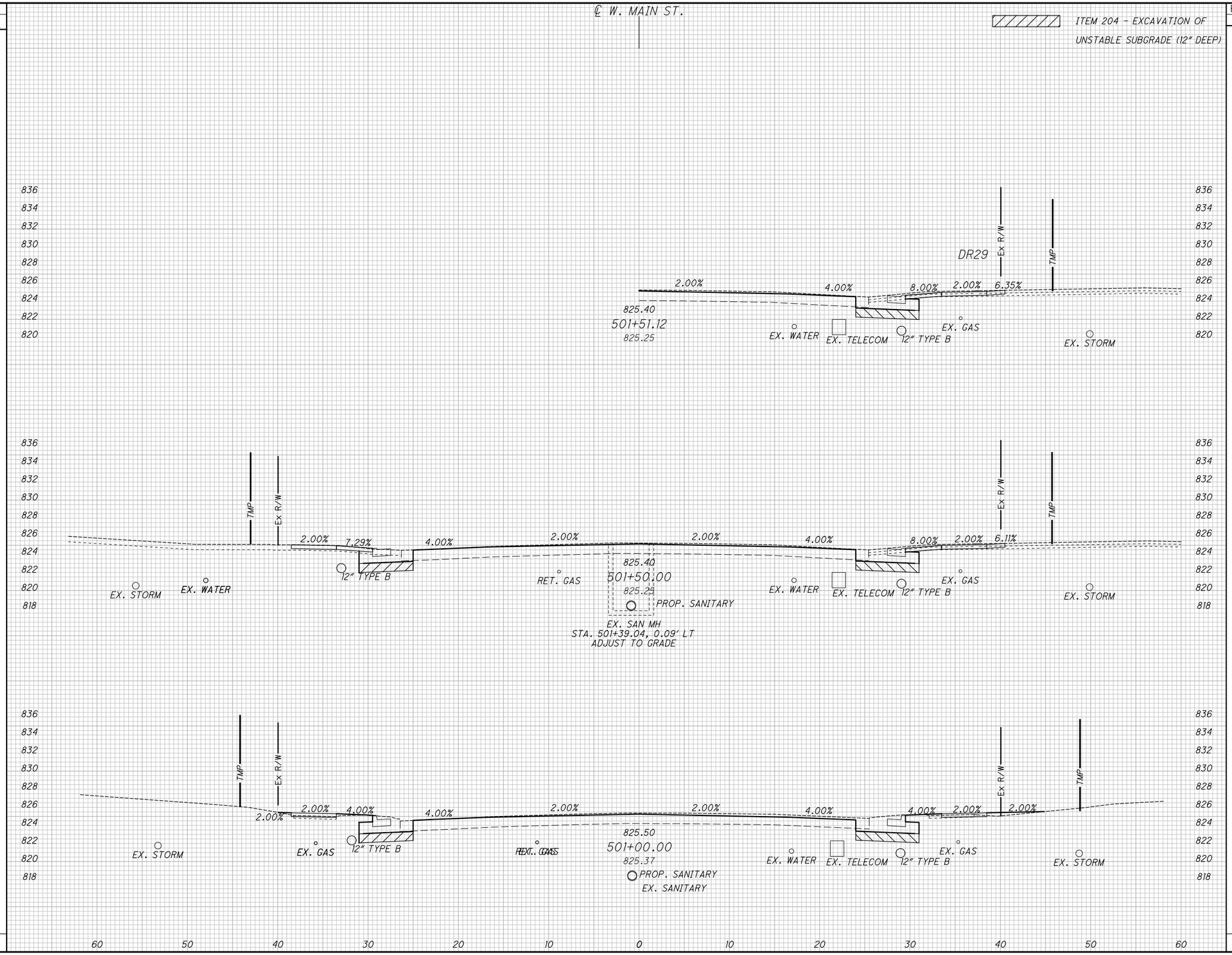

END AREA		VOLUME	
CUT	FILL	CUT	FILL
10			
		25	4
17	4		
		29	6
		54	10

CALCULATED ATW
CHECKED JDH

CROSS SECTIONS WEST MAIN STREET (SR 41)
STA. 501+00.00 TO STA. 501+51.12

MIA-41-09.49

\\strand.com\projects\CIN\4300--4399\4354\004\Drawings\CAD\108662\roadway\sheets\08662XS028.dgn Sheet 2/2/2022 11:36:12 AM Allisonw

SEEDING	
END WIDTH	SQ. YDS.

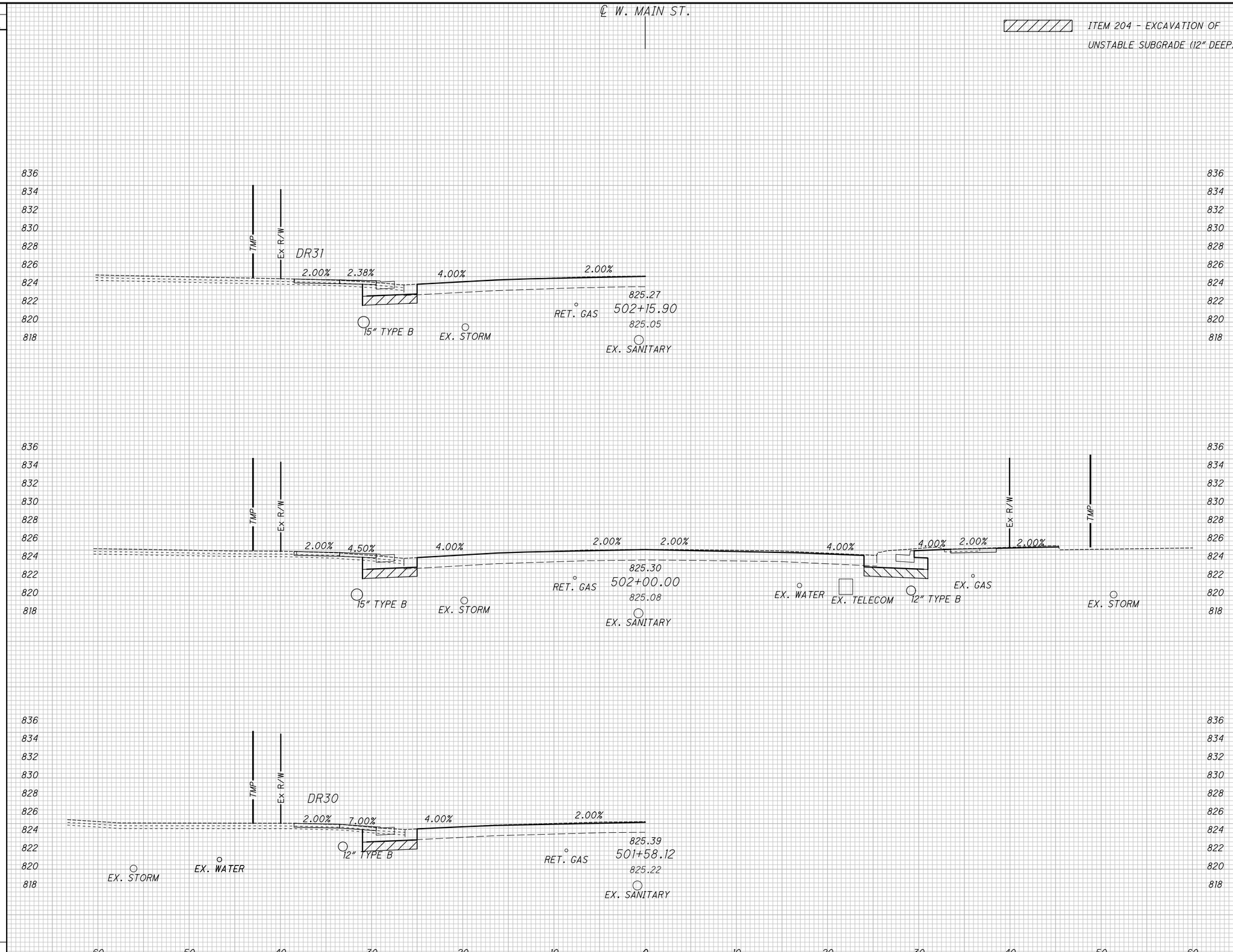

END AREA		VOLUME	
CUT	FILL	CUT	FILL
16	1		
		24	1
		24	1

CALCULATED ATW
CHECKED JDH

CROSS SECTIONS WEST MAIN STREET (SR 41)
STA. 501+58.12 TO STA. 502+15.90

MIA-41-09.49

\\strand.com\projects\CIN\4300--4399\4354\004\Drawings\CAD\108662\roadway\sheets\08662XS029.dgn Sheet 2/2/2022 11:36:12 AM Allisonw

SEEDING	
END WIDTH	SQ. YDS.

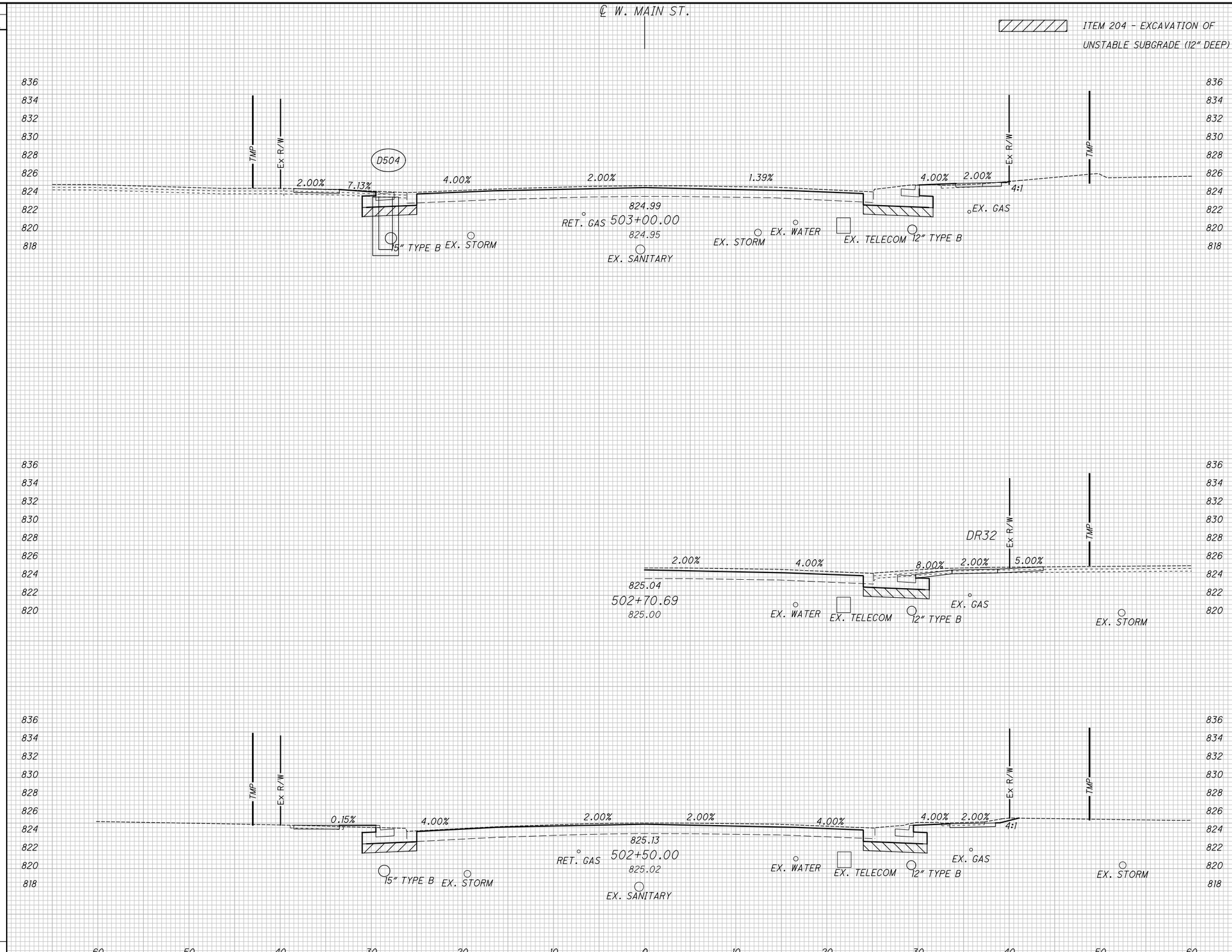

END AREA		VOLUME	
CUT	FILL	CUT	FILL
24	4		
		42	5
21	1		
		34	2
		76	7

CALCULATED ATW
CHECKED JDH

CROSS SECTIONS WEST MAIN STREET (SR 41)
STA. 502+50.00 TO STA. 502+93.86

MIA-41-09.49

\\strand.com\projects\CIN\4300-4399\4354\004\Drawings\CAD\108662\roadway\sheets\08662XS030.dgn Sheet 2/2/2022 11:36:12 AM Allisonw

SEEDING	
END WIDTH	SQ. YDS.

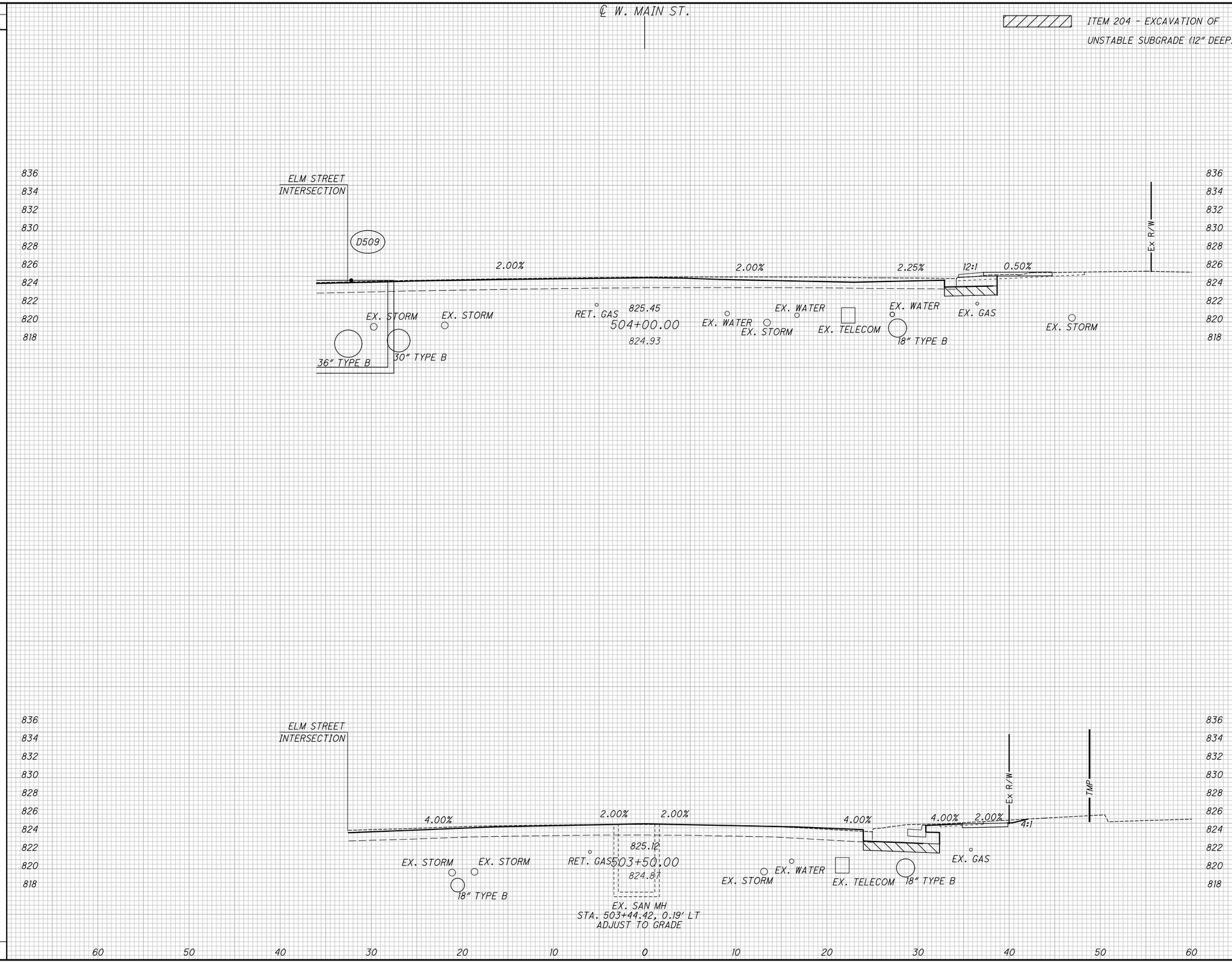

END AREA		VOLUME	
CUT	FILL	CUT	FILL
27	4		
		40	5
16	1		
		37	5
		77	10

CALCULATED ATW
CHECKED JDH

CROSS SECTIONS WEST MAIN STREET (SR 41)
STA. 503+00.00 TO STA. 504+00.00

MIA-41-09.49

\\strand.com\projects\CIN\4300--4399\4354\004\Drawings\CAD\108662\roadway\sheets\08662XS031.dgn Sheet 2/2/2022 11:36:13 AM Allisonw

SEEDING	
END WIDTH	SQ. YDS.

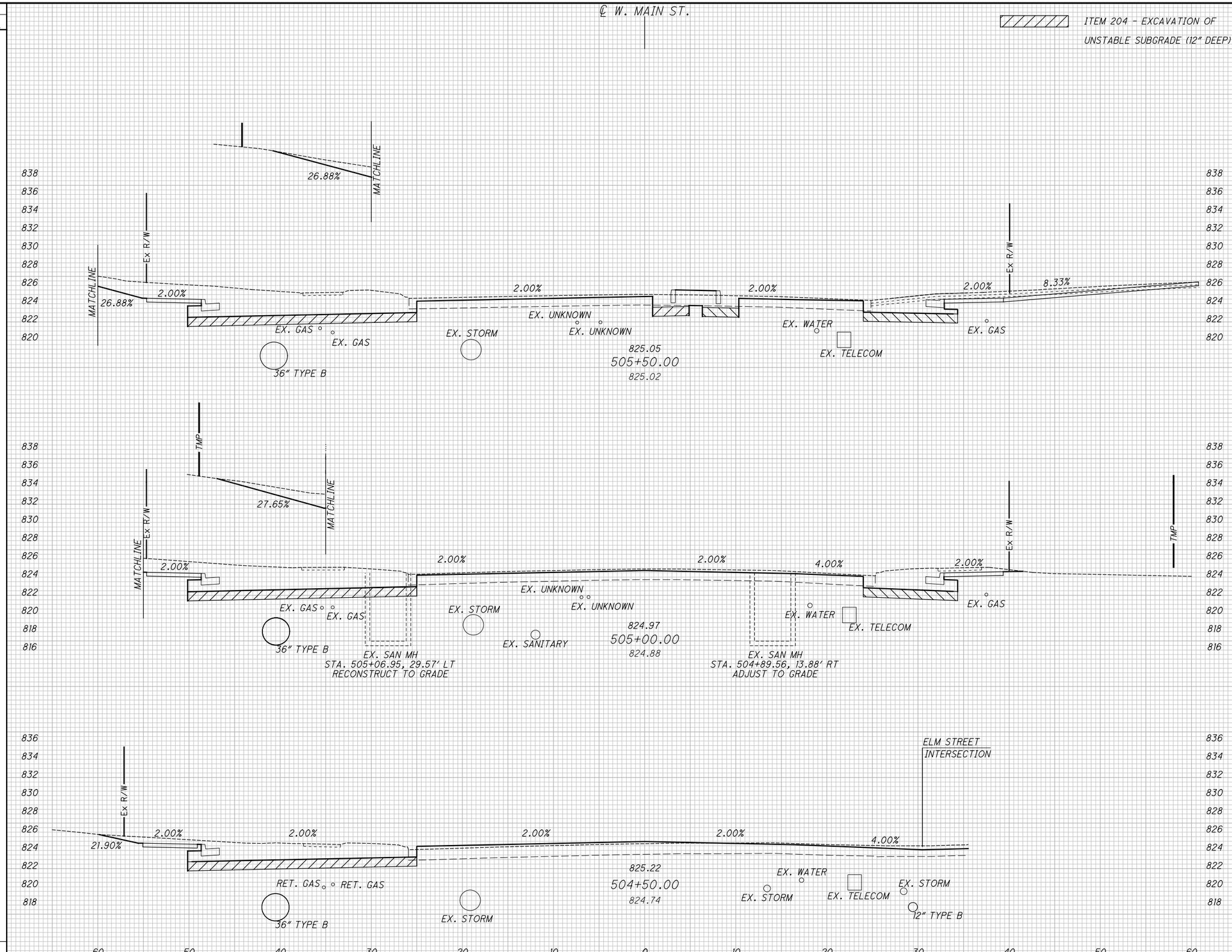

END AREA		VOLUME	
CUT	FILL	CUT	FILL
104	8		
		188	8
99			
		136	
48			
		69	4
		393	12

CALCULATED ATW
CHECKED JDH

CROSS SECTIONS WEST MAIN STREET (SR 41)
STA. 504+50.00 TO STA. 505+50.00

MIA-41-09.49

\\strand.com\projects\CIN\4300--4399\4354\004\Drawings\CAD\108662\roadway\sheets\08662XS032.dgn Sheet 2/2/2022 11:36:13 AM Allisonw

SEEDING	
END WIDTH	SQ. YDS.

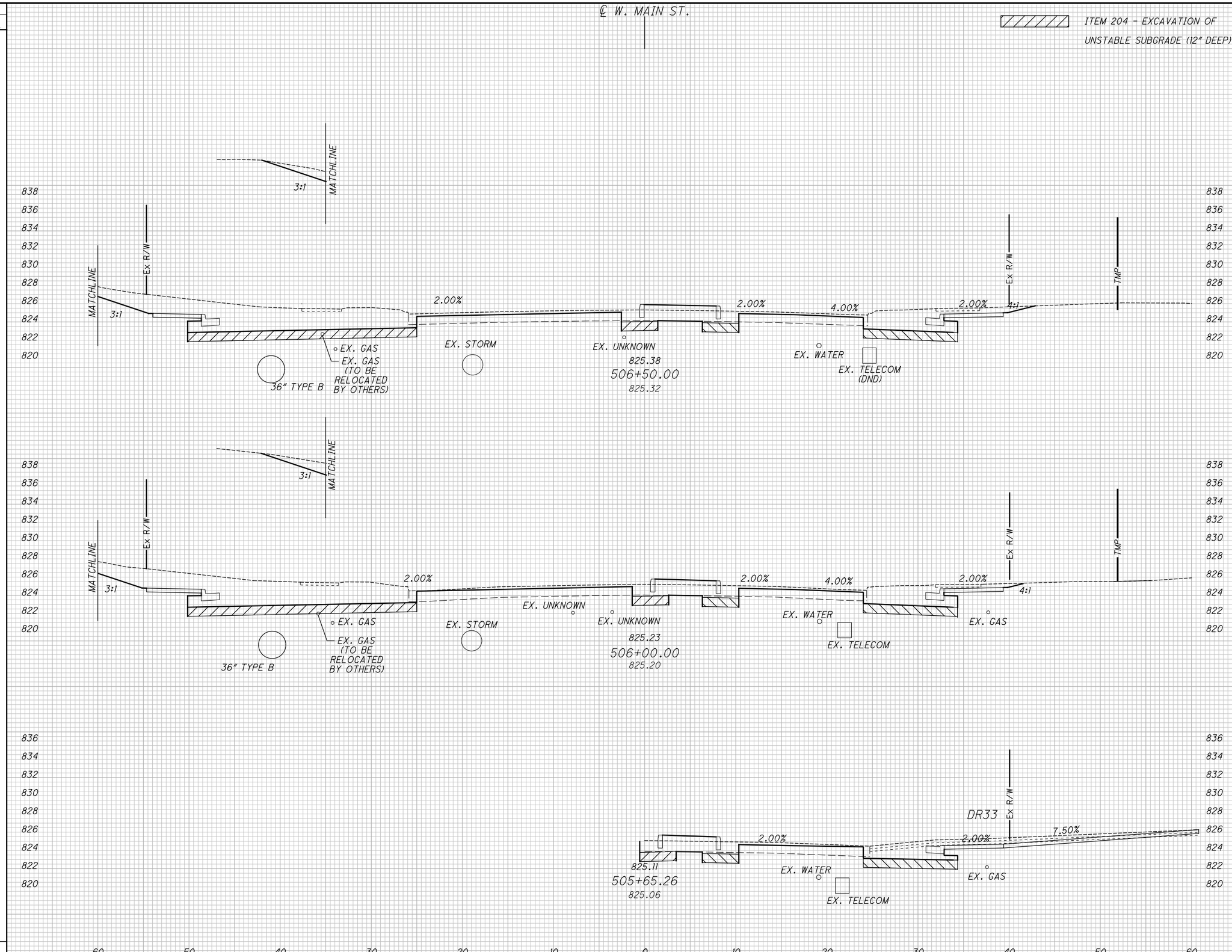

END AREA		VOLUME	
CUT	FILL	CUT	FILL
111	14		
		206	23
112	11		
		200	18
		406	41

CALCULATED ATW
CHECKED JDH

CROSS SECTIONS WEST MAIN STREET (SR 41)
STA. 505+65.26 TO STA. 506+50.00

MIA-41-09.49

\\strand.com\projects\CIN\4300-4399\4354\004\Drawings\CAD\108662\roadway\sheets\08662XS033.dgn Sheet 2/2/2022 11:36:14 AM Allisonw

SEEDING	
END WIDTH	SQ. YDS.

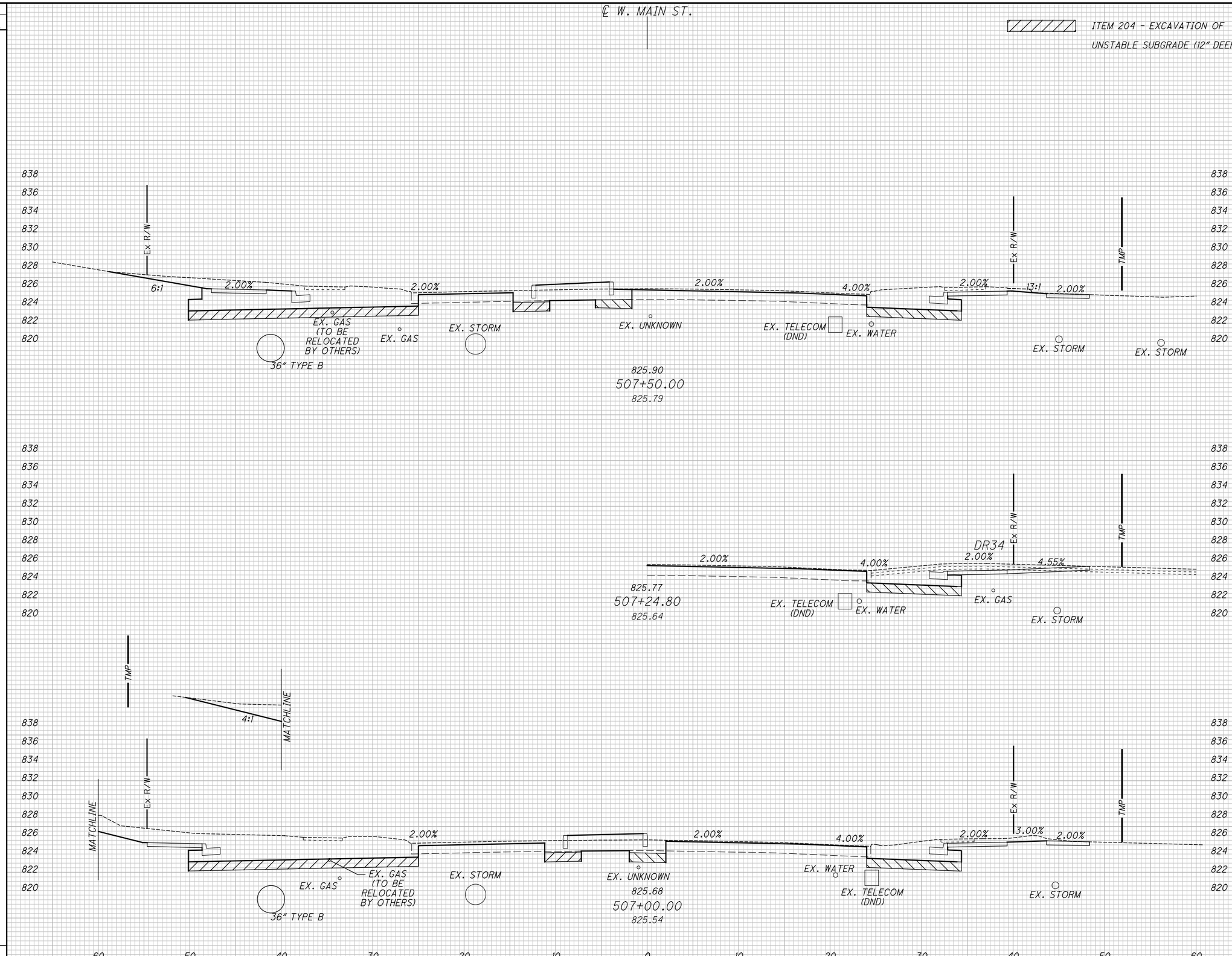

END AREA		VOLUME	
CUT	FILL	CUT	FILL
93	15		
		190	28
112	15		
		206	27
		396	55

CALCULATED ATW
CHECKED JDH

CROSS SECTIONS WEST MAIN STREET (SR 41)
STA. 507+00.00 TO STA. 507+50.00

MIA-41-09.49

\\strand.com\projects\CIN\4300--4399\4354\004\Drawings\CAD\108662\roadway\sheets\08662XS034.dgn Sheet 2/2/2022 11:36:14 AM Allisonw

SEEDING	
END WIDTH	SQ. YDS.

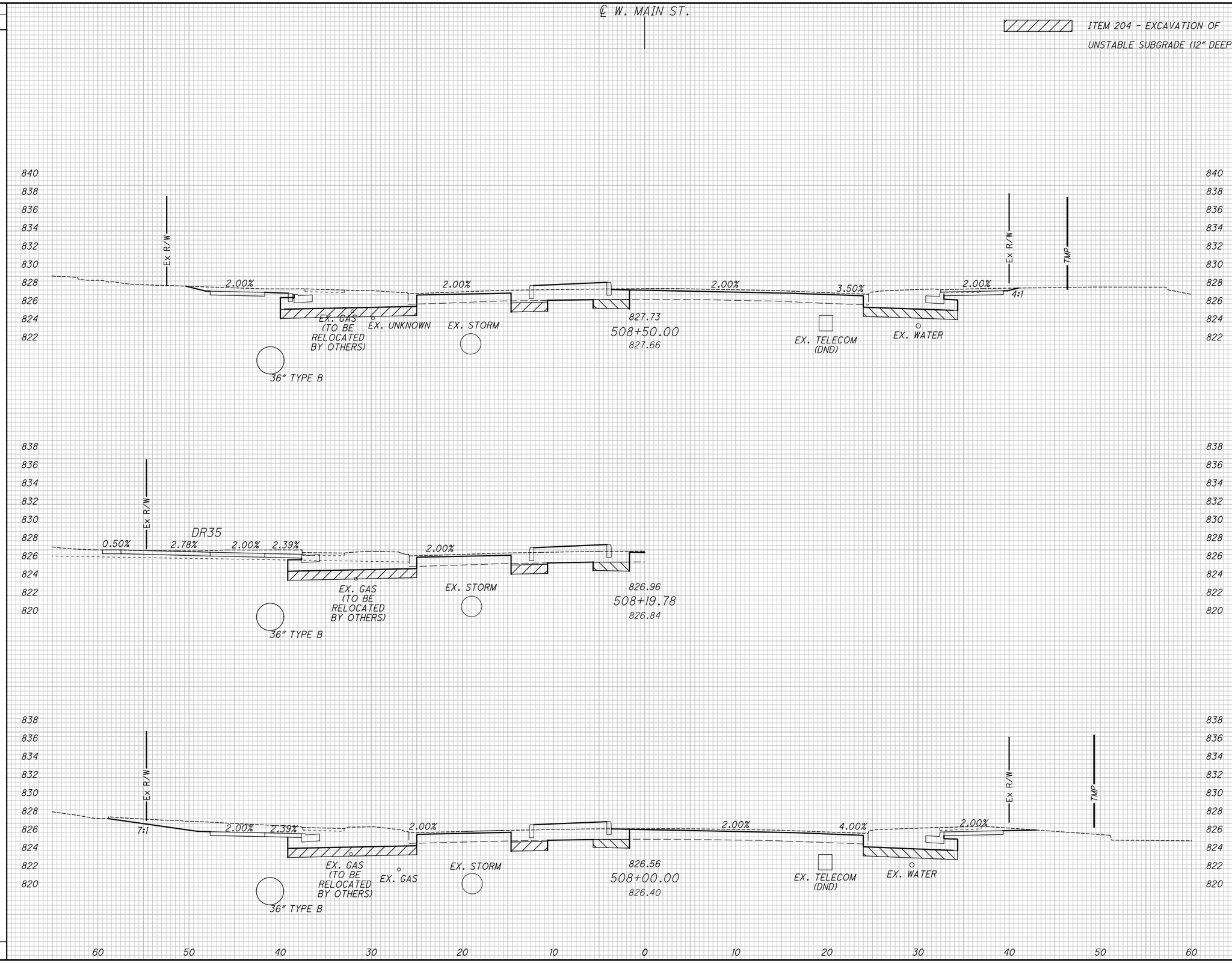

END AREA		VOLUME	
CUT	FILL	CUT	FILL
54	14		
		116	27
71	15		
		152	28
		268	55

CALCULATED ATW
CHECKED JDH

CROSS SECTIONS WEST MAIN STREET (SR 41)
STA. 508+00.00 TO STA. 508+50.00

MIA-41-09.49

\\strand.com\projects\CIN\4300--4399\4354\004\Drawings\CAD\108662\roadway\sheets\08662XS035.dgn Sheet 2/2/2022 11:36:15 AM Allisonw

SEEDING	
END WIDTH	SQ. YDS.

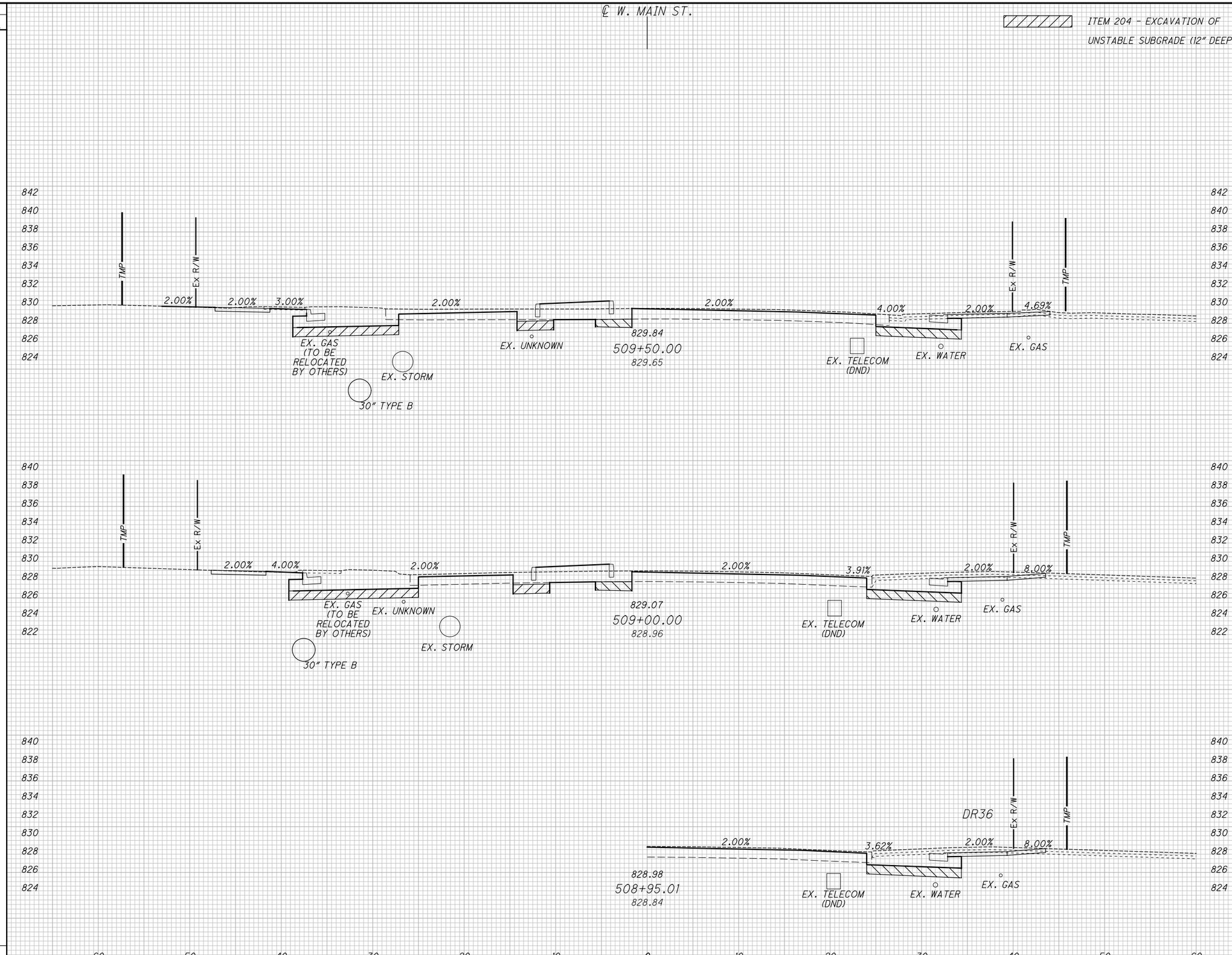

END AREA		VOLUME	
CUT	FILL	CUT	FILL
32	15		
		69	27
43	14		
		90	26
		159	53

CALCULATED ATW
CHECKED JDH

CROSS SECTIONS WEST MAIN STREET (SR 41)
STA. 508+95.01 TO STA. 509+50.00

MIA-41-09.49

\\strand.com\projects\CIN\4300-4399\4354\004\Drawings\CAD\108662\roadway\sheets\08662XS036.dgn Sheet 2/2/2022 11:36:15 AM Allisonw

SEEDING	
END WIDTH	SQ. YDS.

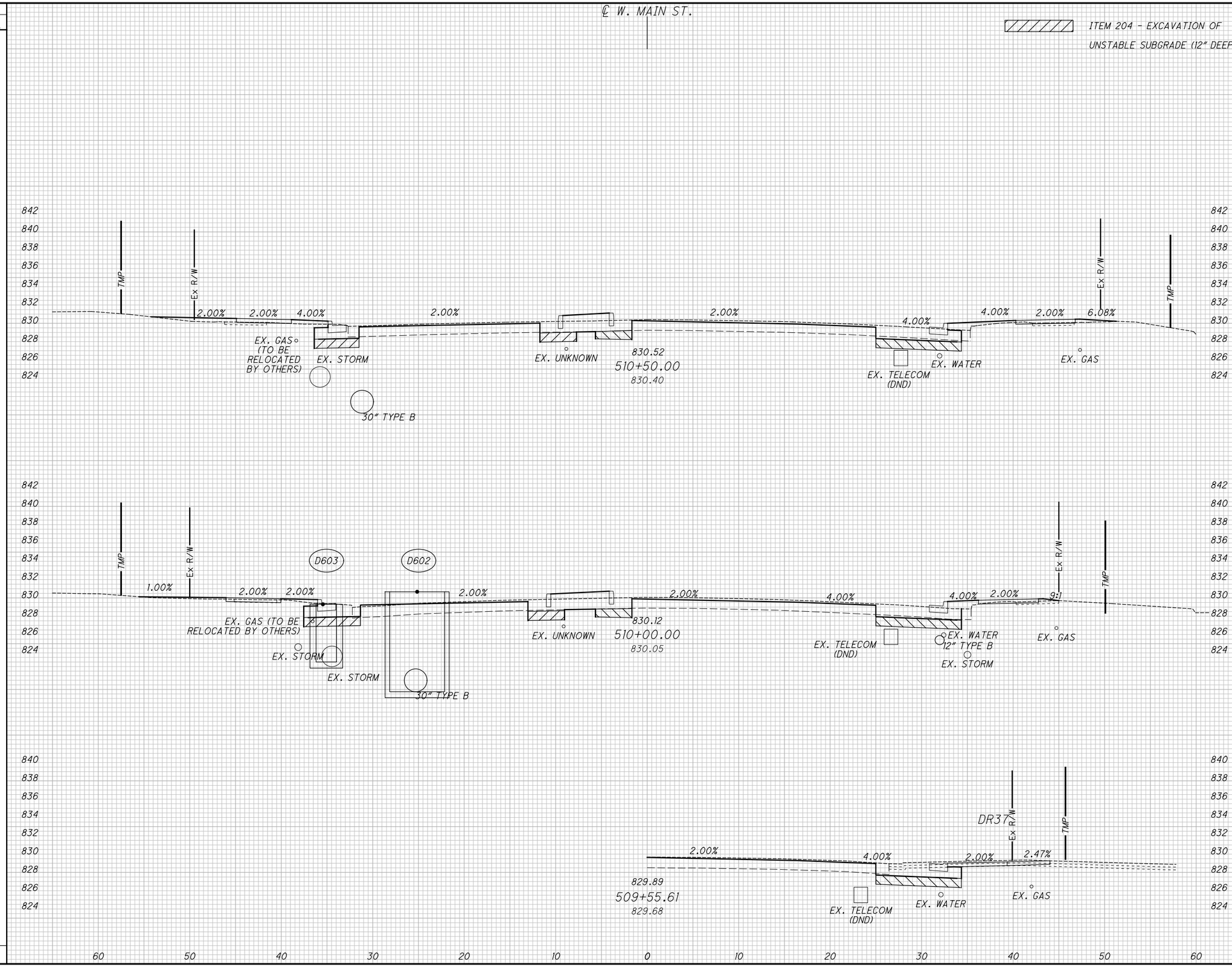

END AREA		VOLUME	
CUT	FILL	CUT	FILL
8	22		
		16	38
9	19		
		38	31
		54	69

CALCULATED ATW
CHECKED JDH

CROSS SECTIONS WEST MAIN STREET (SR 41)
STA. 509+55.61 TO STA. 510+50.00

MIA-41-09.49

\\strand.com\projects\CIN\4300--4399\4354\004\Drawings\CAD\108662\roadway\sheets\08662XS037.dgn Sheet 2/2/2022 11:36:16 AM Allisonw

SEEDING	
END WIDTH	SQ. YDS.

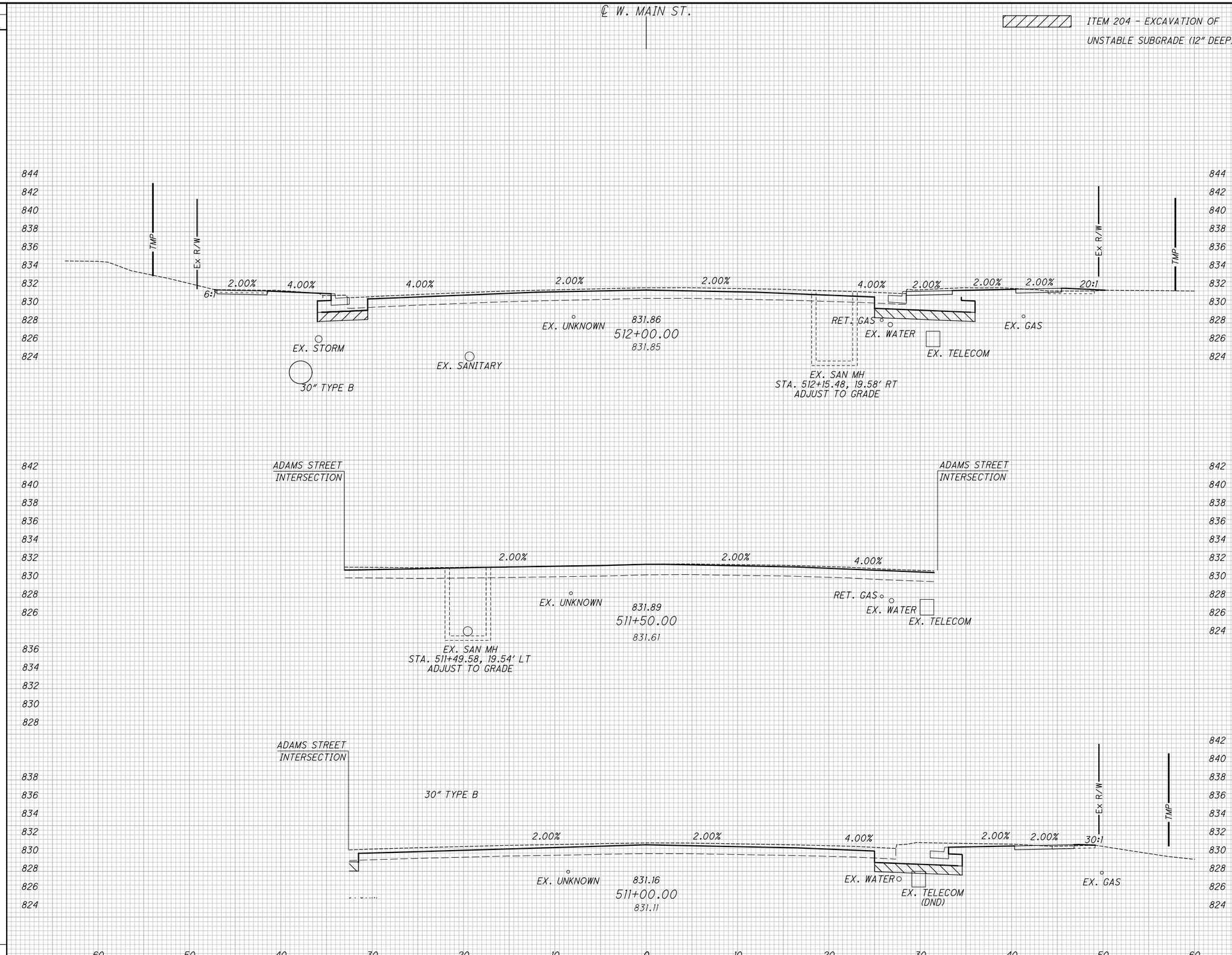

END AREA		VOLUME	
CUT	FILL	CUT	FILL
28	3		
		27	4
		77	2
82	1		
		83	21
		187	27

CALCULATED ATW
CHECKED JDH

CROSS SECTIONS WEST MAIN STREET (SR 41)
STA. 511+00.00 TO STA. 512+00.00

MIA-41-09.49

\\strand.com\projects\CIN\4300-4399\4354\004\Drawings\CAD\108662\roadway\sheets\08662XS038.dgn Sheet 2/2/2022 11:36:16 AM Allisonw

SEEDING	
END WIDTH	SQ. YDS.

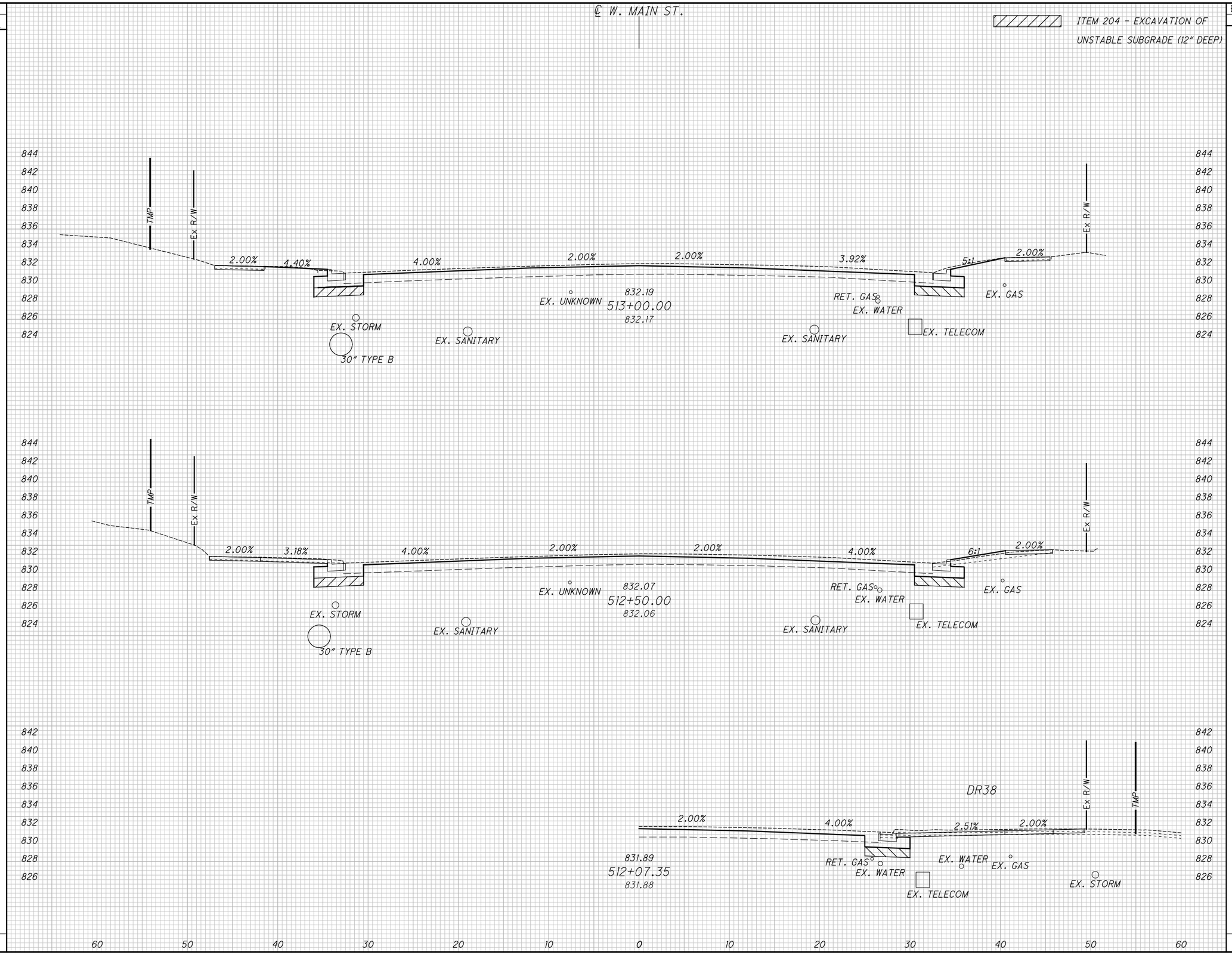

END AREA		VOLUME	
CUT	FILL	CUT	FILL
15	1	25	6
12	5	37	7
		62	13

CALCULATED ATW
CHECKED JDH

CROSS SECTIONS WEST MAIN STREET (SR 41)
STA. 512+07.35 TO STA. 513+00.00

MIA-41-09.49

\\strand.com\projects\CIN\4300--4399\4354\004\Drawings\CAD\108662\roadway\sheets\08662XS039.dgn Sheet 2/2/2022 11:36:16 AM Allisonw

SEEDING	
END WIDTH	SQ. YDS.

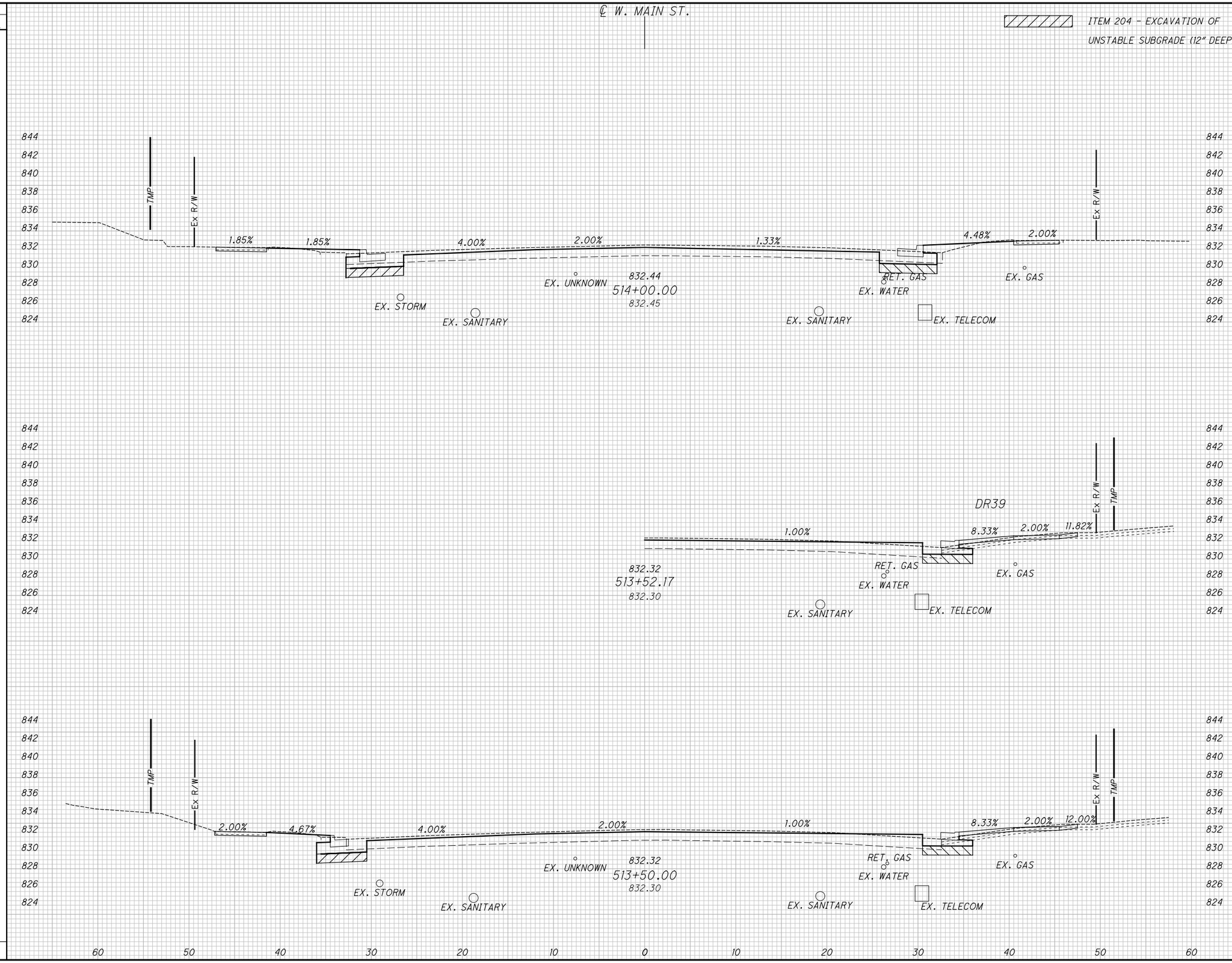

END AREA		VOLUME	
CUT	FILL	CUT	FILL
7	7		
		14	9
8	3		
		21	4
		35	13

CALCULATED ATW
CHECKED JDH

CROSS SECTIONS WEST MAIN STREET (SR 41)
STA. 513+50.00 TO STA. 514+00.00

MIA-41-09.49

\\strand.com\projects\CIN\4300--4399\4354\004\Drawings\CAD\108662\roadway\sheets\08662XS040.dgn Sheet 2/2/2022 11:36:17 AM Allisonw

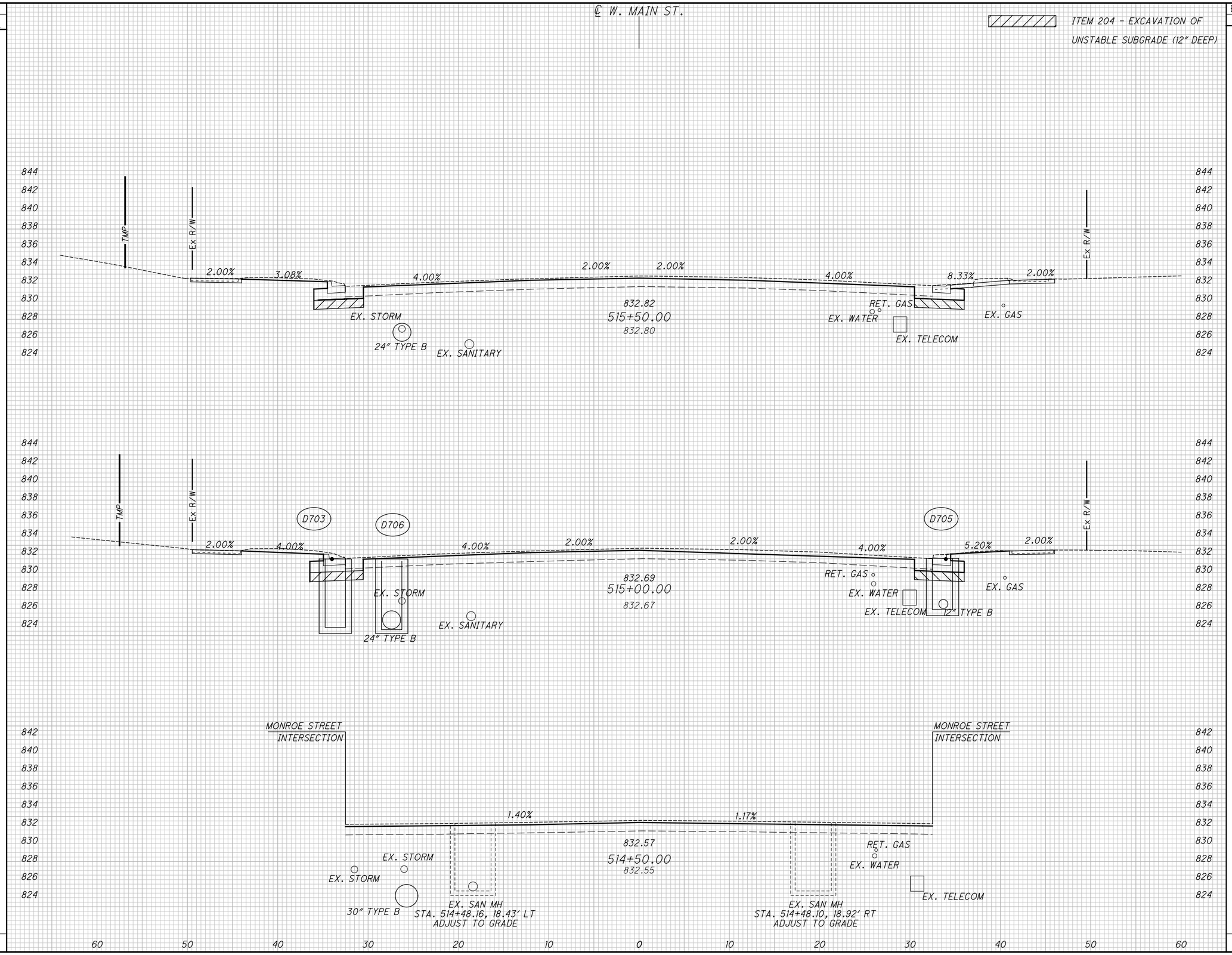

END AREA CUT	END AREA FILL	VOLUME CUT	VOLUME FILL
18		33	
18		18	
		7	7
		58	7

CALCULATED ATW
CHECKED JDH

CROSS SECTIONS WEST MAIN STREET (SR 41)
STA. 514+50.00 TO STA. 515+50.00

MIA-41-09.49

\\strand.com\projects\CIN\4300--4399\4354\004\Drawings\CAD\108662\roadway\sheets\08662XS041.dgn Sheet 2/2/2022 11:36:17 AM Allisonw

SEEDING	
END WIDTH	SQ. YDS.

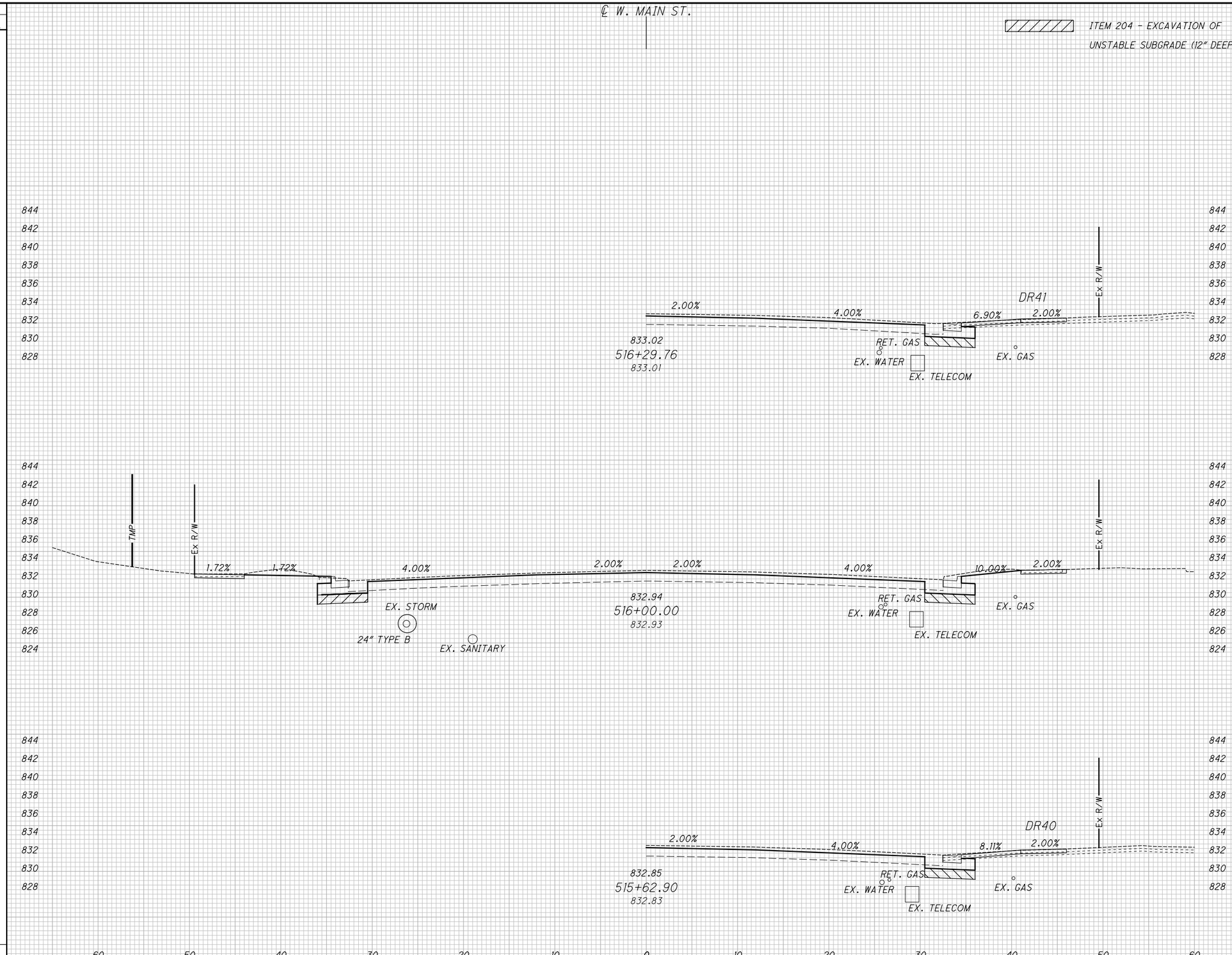

END AREA		VOLUME	
CUT	FILL	CUT	FILL
20		35	
		35	

CALCULATED ATW
CHECKED JDH

CROSS SECTIONS WEST MAIN STREET (SR 41)
STA. 515+62.90 TO STA. 516+29.76

MIA-41-09.49

\\strand.com\projects\CIN\4300--4399\4354\004\Drawings\CAD\108662\roadway\sheets\08662XS042.dgn Sheet 2/2/2022 11:36:17 AM Allisonw

SEEDING	
END WIDTH	SQ. YDS.

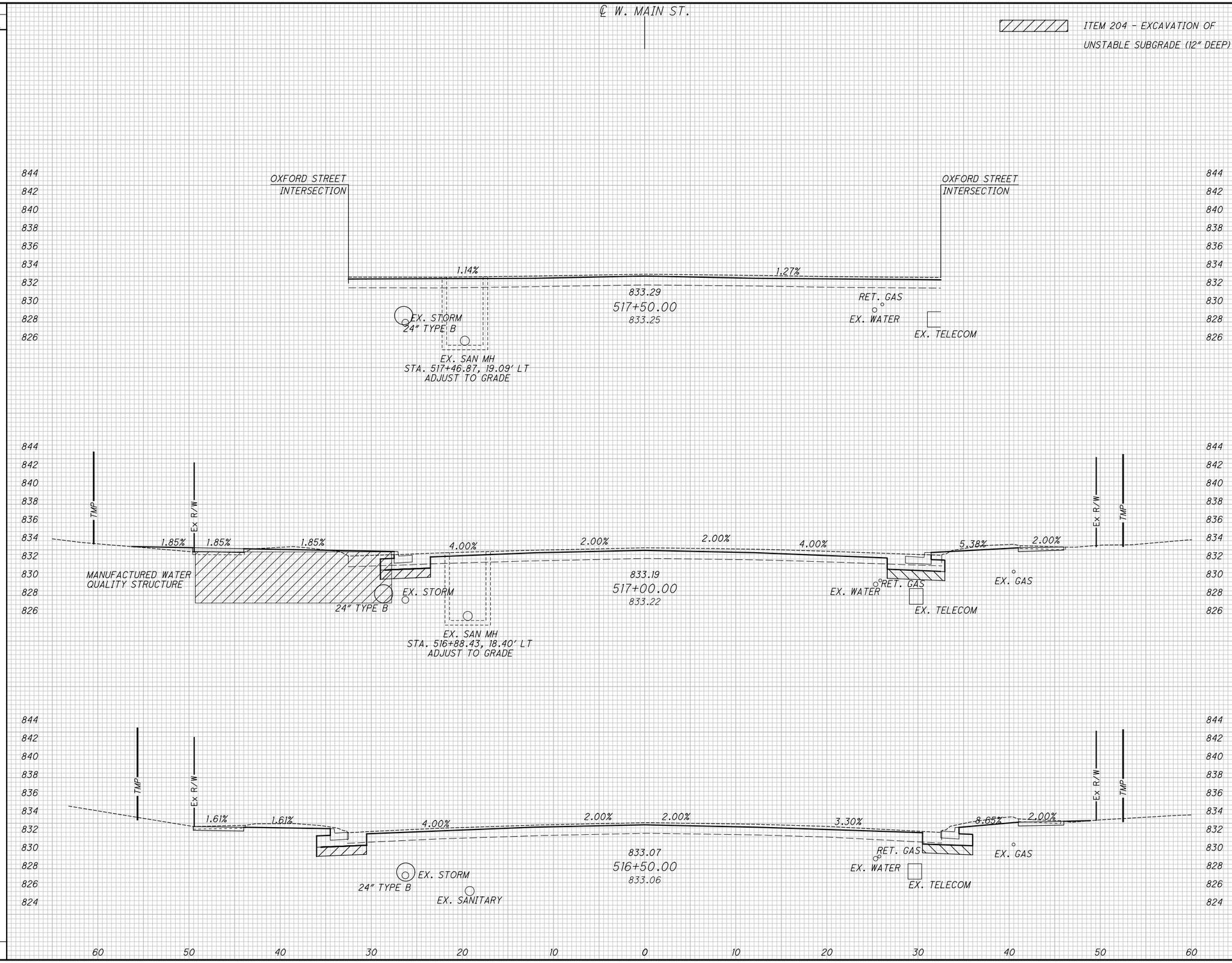

END AREA		VOLUME	
CUT	FILL	CUT	FILL
		12	12
12	12	31	12
22	1	39	1
		82	25

CALCULATED ATW
CHECKED JDH

CROSS SECTIONS WEST MAIN STREET (SR 41)
STA. 516+50.00 TO STA. 517+50.00

MIA-41-09.49

\\strand.com\projects\CIN\4300--4399\4354\004\Drawings\CAD\108662\roadway\sheets\08662XS043.dgn Sheet 2/2/2022 11:36:18 AM Allisonw

SEEDING	
END WIDTH	SQ. YDS.

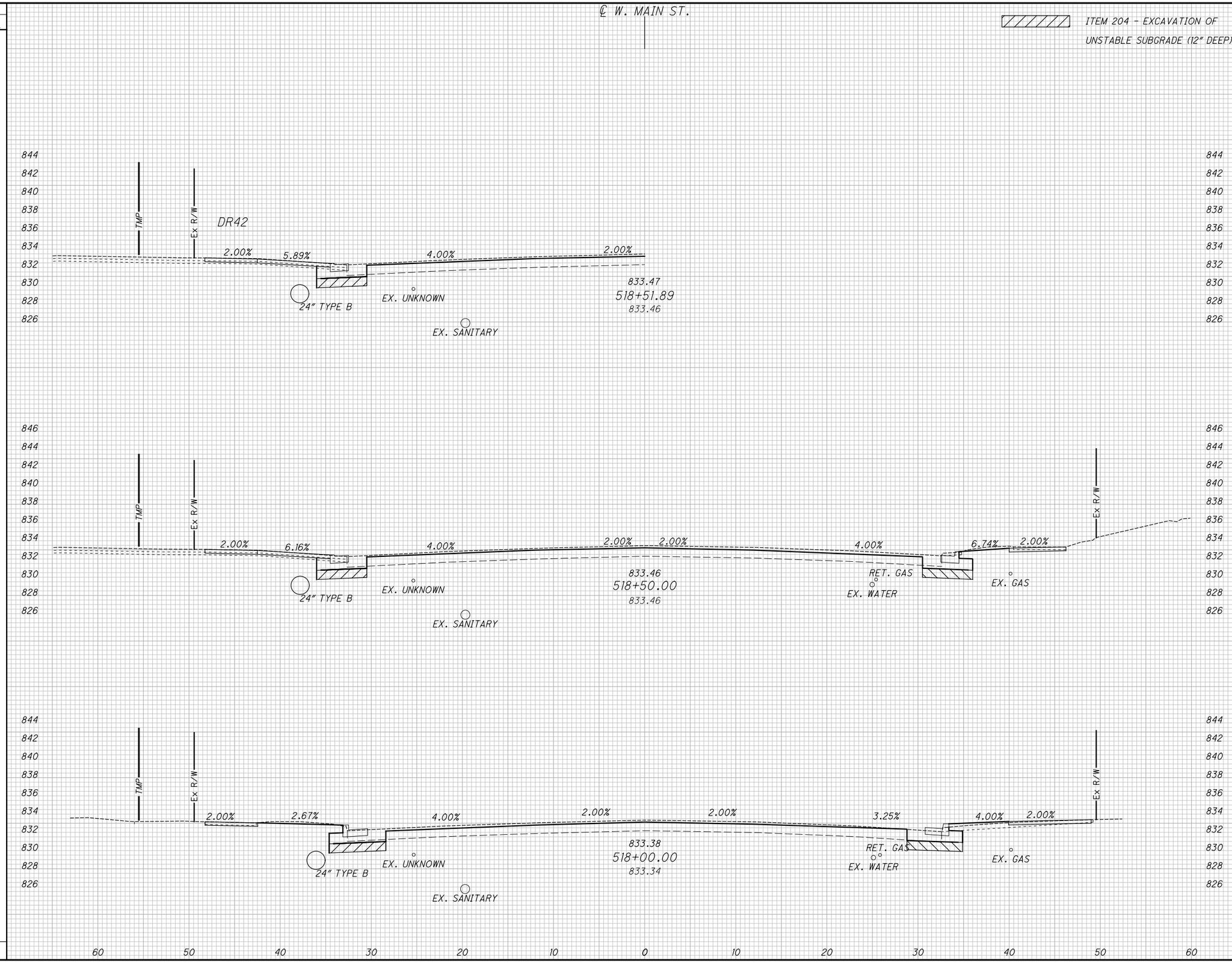

END AREA		VOLUME	
CUT	FILL	CUT	FILL
12		18	6
7	6	7	6
		25	12

CALCULATED ATW
CHECKED JDH

CROSS SECTIONS WEST MAIN STREET (SR 41)
STA. 518+00.00 TO STA. 518+51.89

MIA-41-09.49

\\strand.com\projects\CIN\4300-4399\4354\004\Drawings\CAD\108662\roadway\sheets\08662XS044.dgn Sheet 2/2/2022 11:36:18 AM Allisonw

SEEDING	
END WIDTH	SQ. YDS.

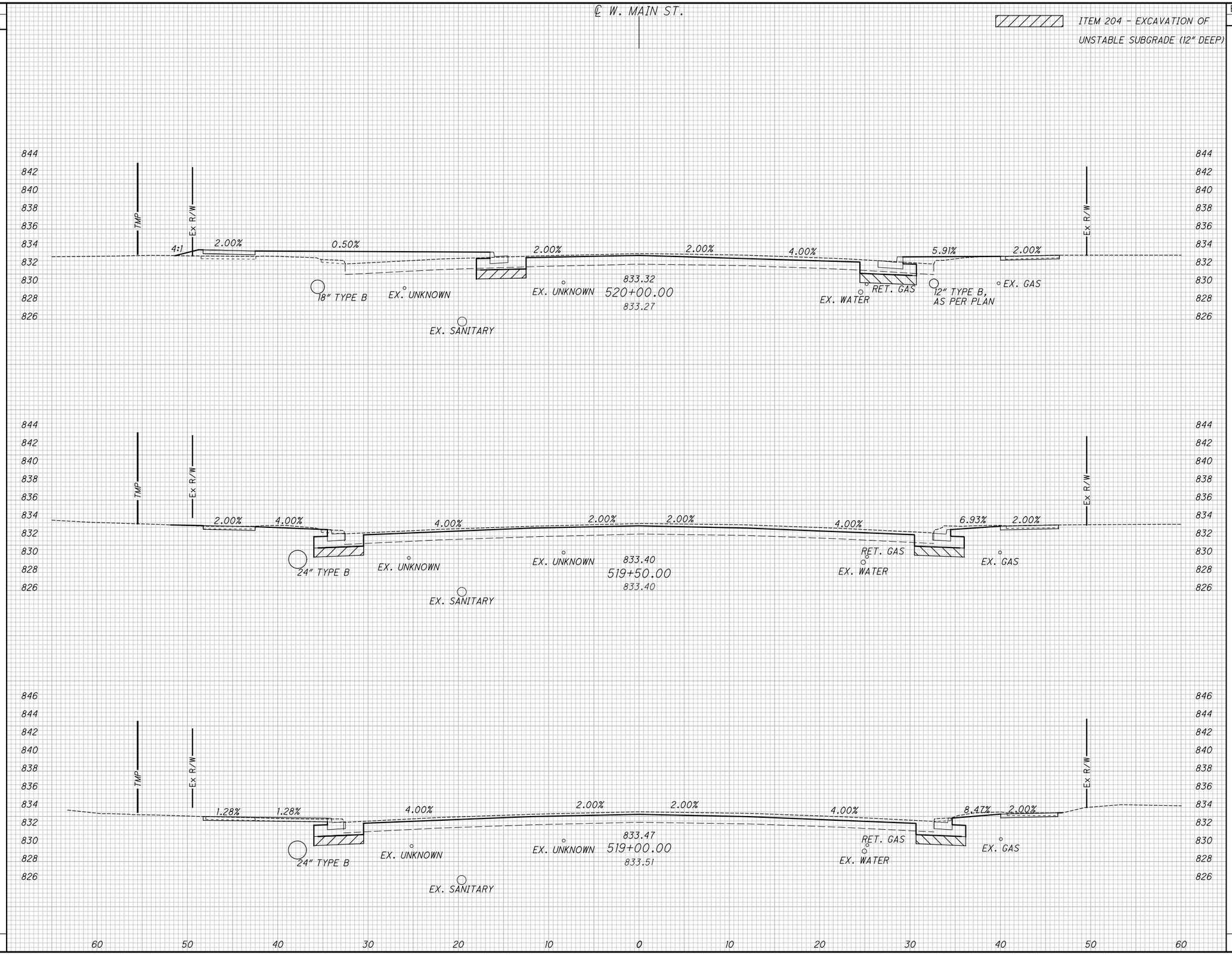

END AREA		VOLUME	
CUT	FILL	CUT	FILL
3	51		
		17	48
15			
		28	1
15			
		25	
		70	49

CALCULATED ATW
CHECKED JDH

CROSS SECTIONS WEST MAIN STREET (SR 41)
STA. 519+00.00 TO STA. 520+00.00

MIA-41-09.49

\\strand.com\projects\CIN\4300--4399\4354\004\Drawings\CAD\108662\roadway\sheets\08662XS045.dgn Sheet 2/2/2022 11:36:18 AM Allisonw

SEEDING	
END WIDTH	SQ. YDS.

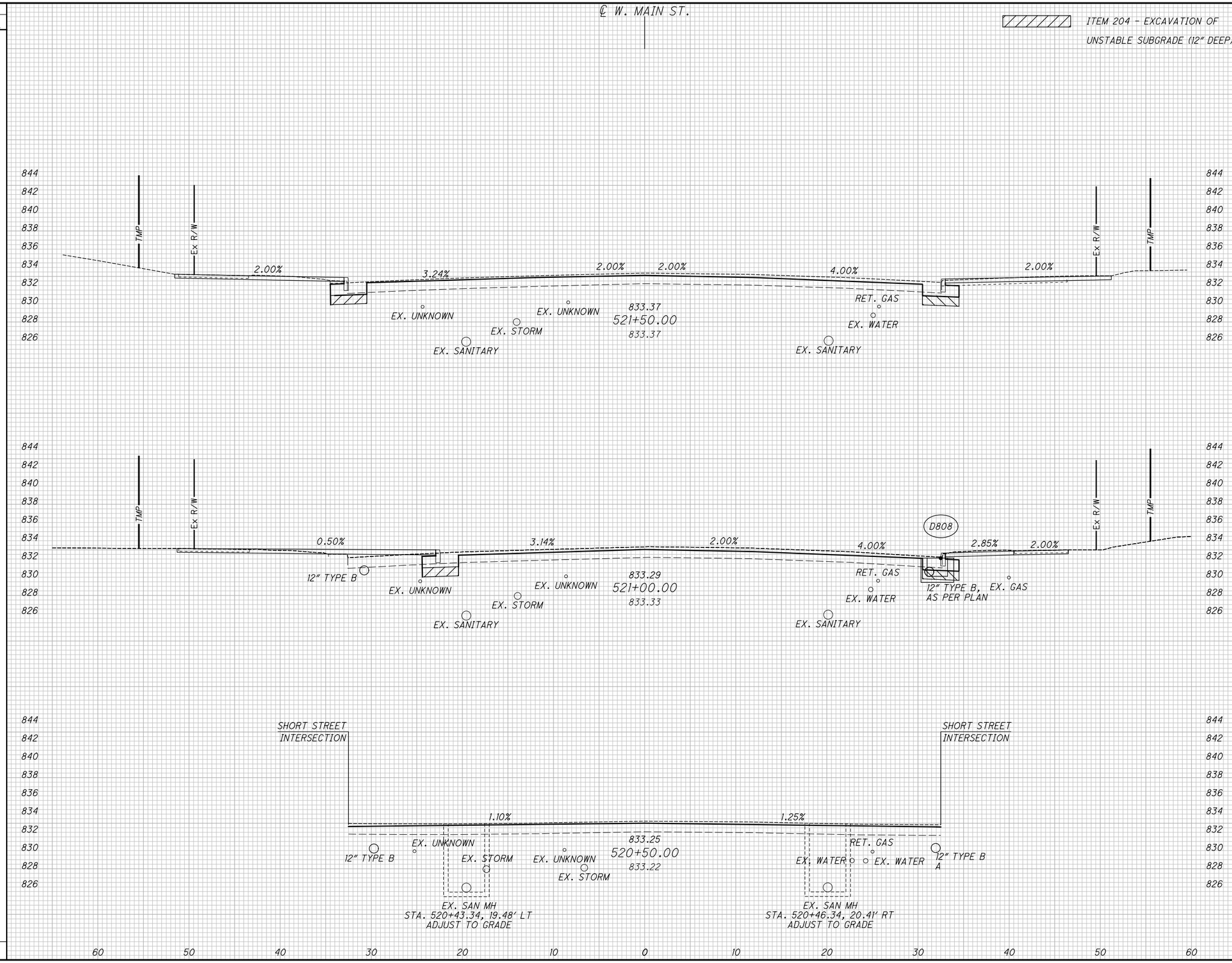

END AREA		VOLUME	
CUT	FILL	CUT	FILL
12	4		
		23	14
13	11		
		13	11
		4	48
		40	73

CALCULATED ATW
CHECKED JDH

CROSS SECTIONS WEST MAIN STREET (SR 41)
STA. 520+50.00 TO STA. 521+50.00

MIA-41-09.49

\\strand.com\projects\CIN\4300--4399\4354\004\Drawings\CAD\108662\roadway\sheets\08662XS046.dgn Sheet 2/2/2022 11:36:19 AM Allisonw

SEEDING END WIDTH	SEEDING SQ. YDS.

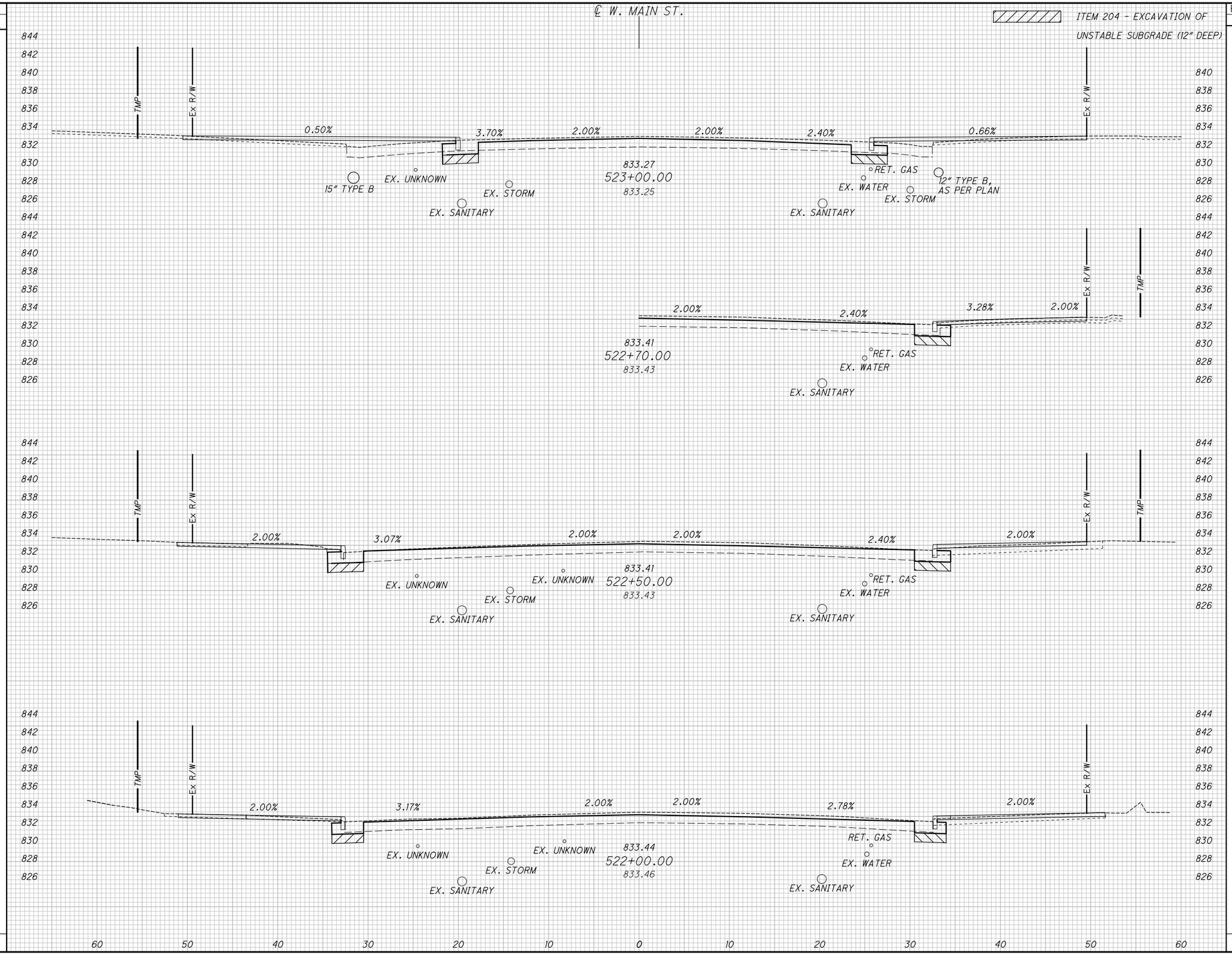

END AREA CUT	END AREA FILL	VOLUME CUT	VOLUME FILL
3	33		
		10	41
8	11		
		11	18
4	8		
		15	11
		36	70

CALCULATED ATW
CHECKED JDH

CROSS SECTIONS WEST MAIN STREET (SR 41)
STA. 522+00.00 TO STA. 523+00.00

MIA-41-09.49

\\strand.com\projects\CIN\4300--4399\4354\004\Drawings\CAD\108662\roadway\sheets\08662XS047.dgn Sheet 2/2/2022 11:36:19 AM Allisonw

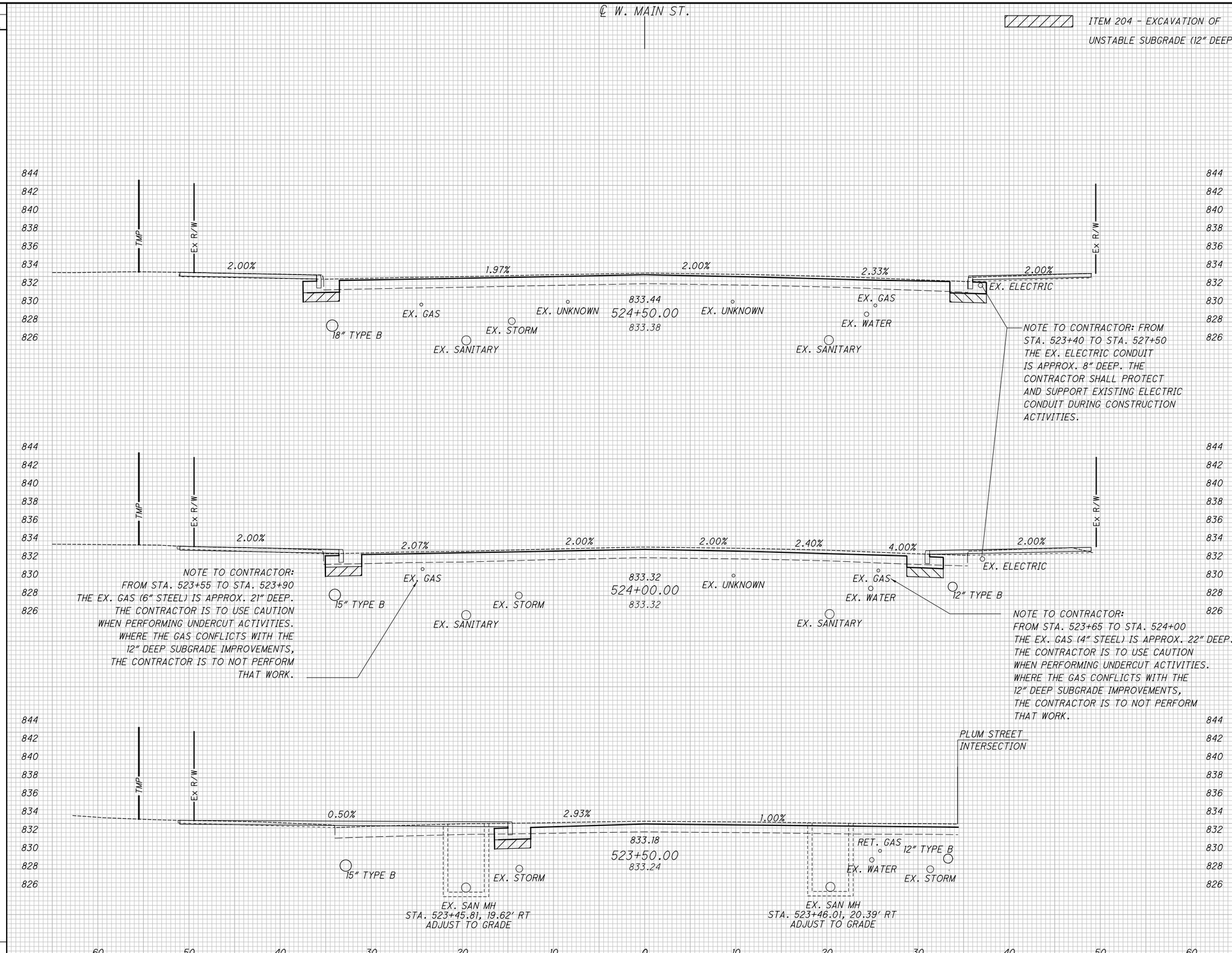

SEEDING	
END WIDTH	SQ. YDS.

END AREA		VOLUME	
CUT	FILL	CUT	FILL
6			
		8	5
3	6		
		6	24
3	20		
		6	49
		20	78

CALCULATED ATW
CHECKED JDH

CROSS SECTIONS WEST MAIN STREET (SR 41)
STA. 523+50.00 TO STA. 524+50.00

MIA-41-09.49

\\strand.com\projects\CIN\4300-4399\4354\004\Drawings\CAD\108662\roadway\sheets\108662XS048.dgn Sheet 2/8/2022 4:32:58 PM Allisonw

SEEDING	
END WIDTH	SQ. YDS.

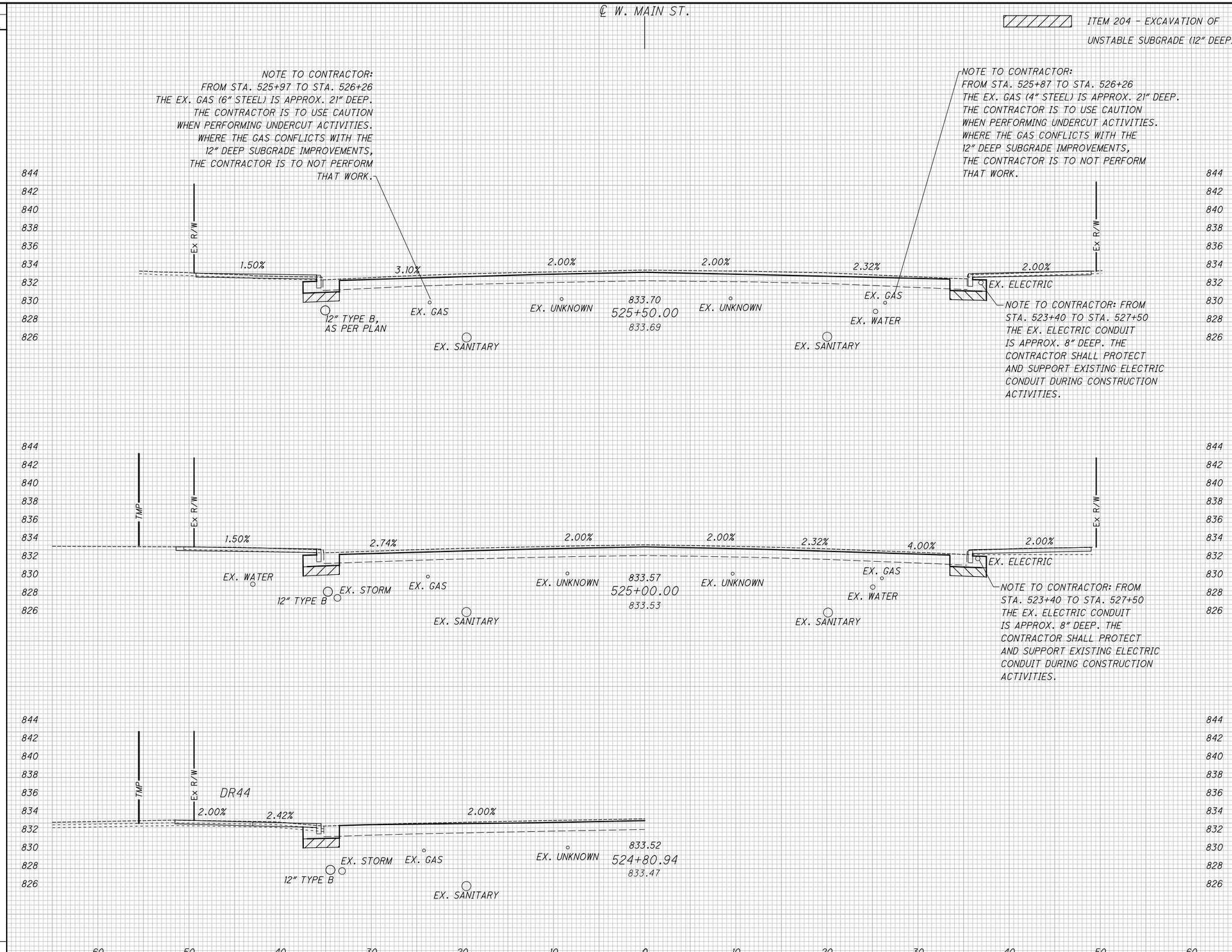

END AREA		VOLUME	
CUT	FILL	CUT	FILL
6		12	
7		12	
		24	

CALCULATED ATW
CHECKED JDH

CROSS SECTIONS WEST MAIN STREET (SR 41)
STA. 524+80.94 TO STA. 525+50.00

MIA-41-09.49

\\strand.com\projects\CIN\4300-4399\4354\004\Drawings\CAD\108662\roadway\sheets\08662XS049.dgn Sheet 2/8/2022 4:32:58 PM Allisonw

SEEDING	
END WIDTH	SQ. YDS.

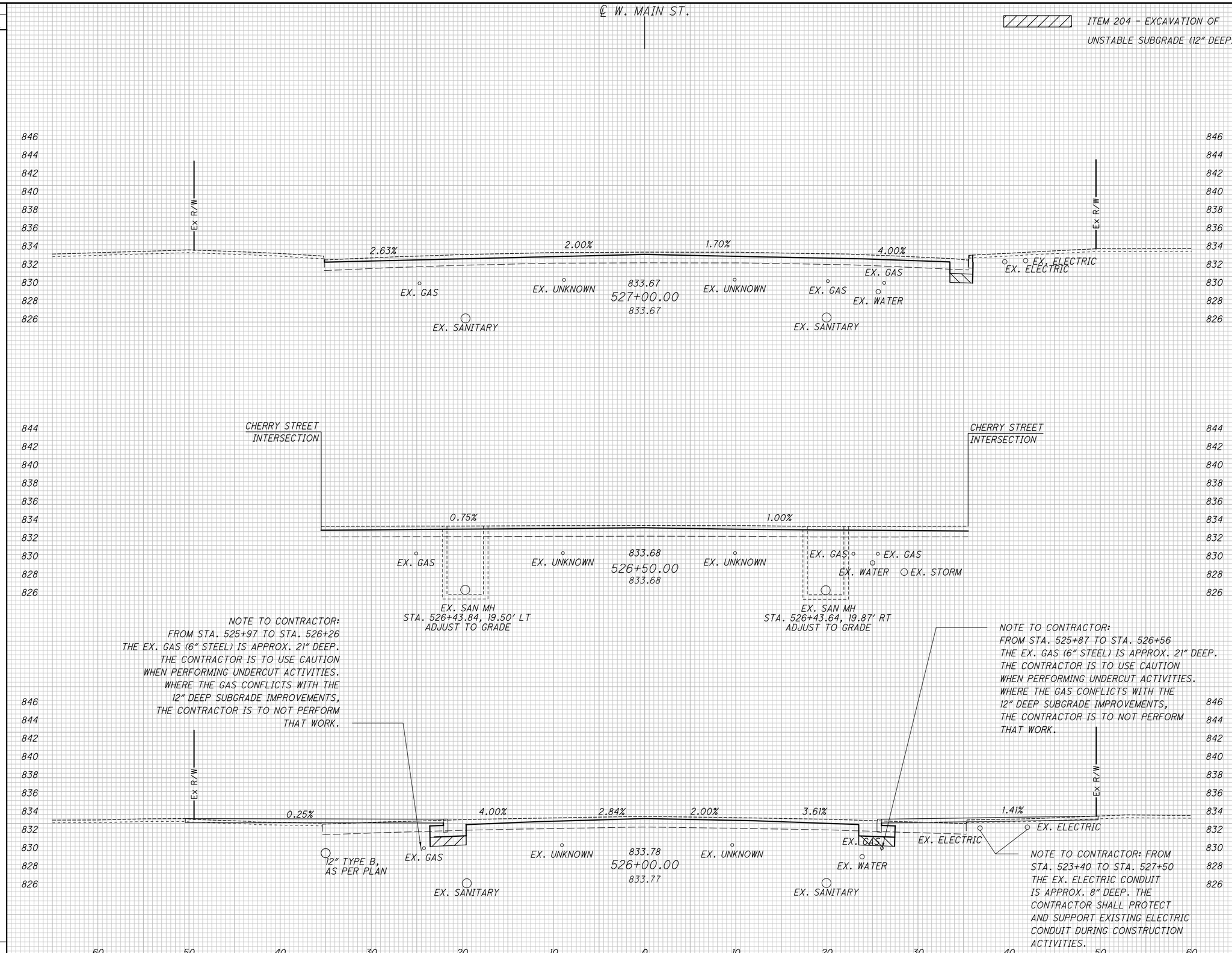

END AREA		VOLUME	
CUT	FILL	CUT	FILL
2			
		3	
		6	23
5	26		
		10	23
		19	46

CALCULATED ATW
CHECKED JDH

CROSS SECTIONS WEST MAIN STREET (SR 41)
STA. 526+00.00 TO STA. 527+00.00

MIA-41-09.49

\\strand.com\projects\CIN\4300--4399\4354\004\Drawings\CAD\108662\roadway\sheets\08662XS050.dgn Sheet 2/8/2022 4:32:58 PM Allisonw

SEEDING	
END WIDTH	SQ. YDS.

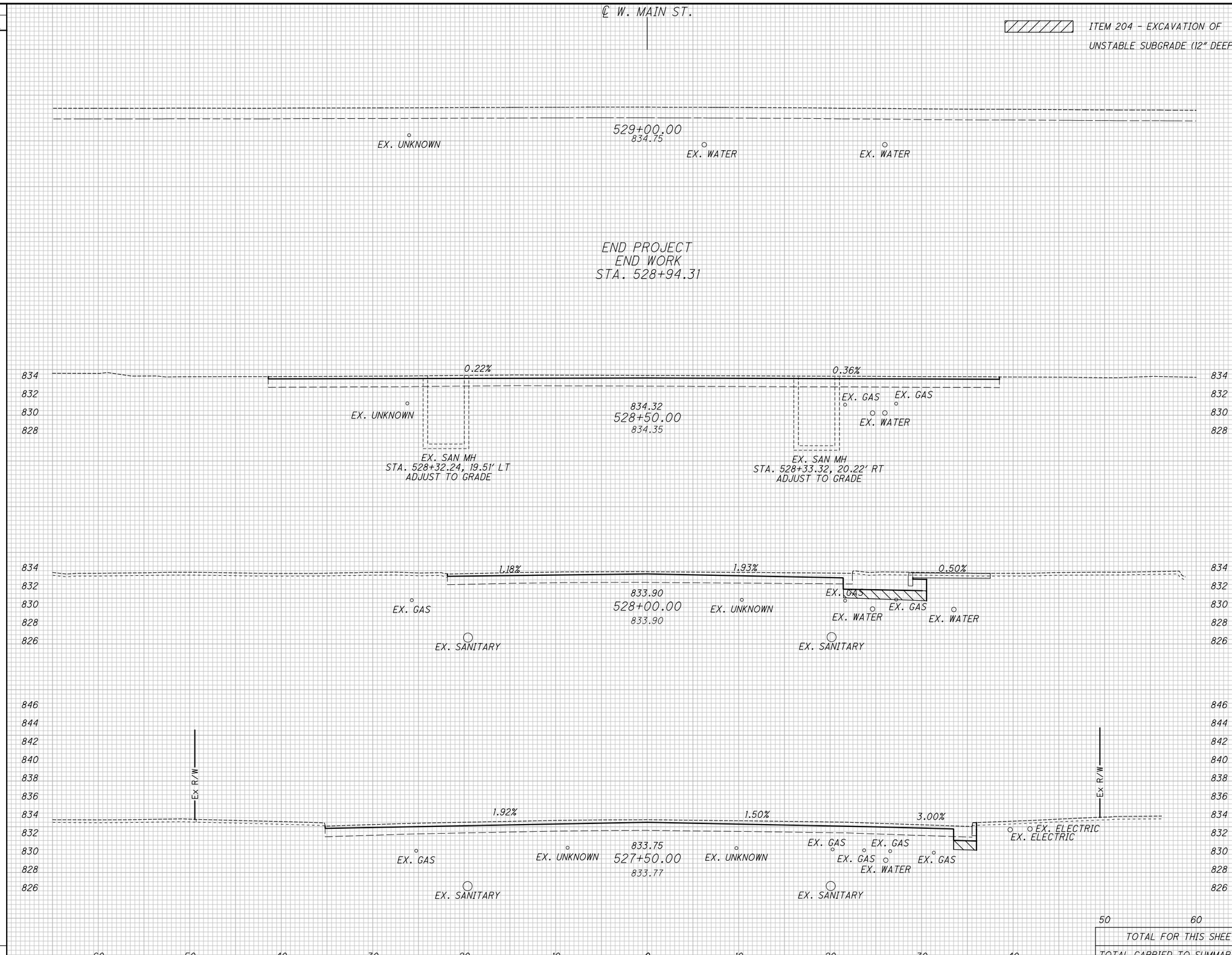

END AREA		VOLUME	
CUT	FILL	CUT	FILL
		14	
16			
		19	
2			
		4	
TOTAL FOR THIS SHEET		36	
TOTAL CARRIED TO SUMMARY		3898	839

CALCULATED ATW
CHECKED JDH

CROSS SECTIONS WEST MAIN STREET (SR 41)
STA. 527+50.00 TO STA. 528+50.00

MIA-41-09.49

S:\CIN\4300--4399\4354\004\Drawings\CAD\108662\roadway\sheets\08662XS051.dgn Sheet 2/8/2022 4:32:59 PM Allisonw

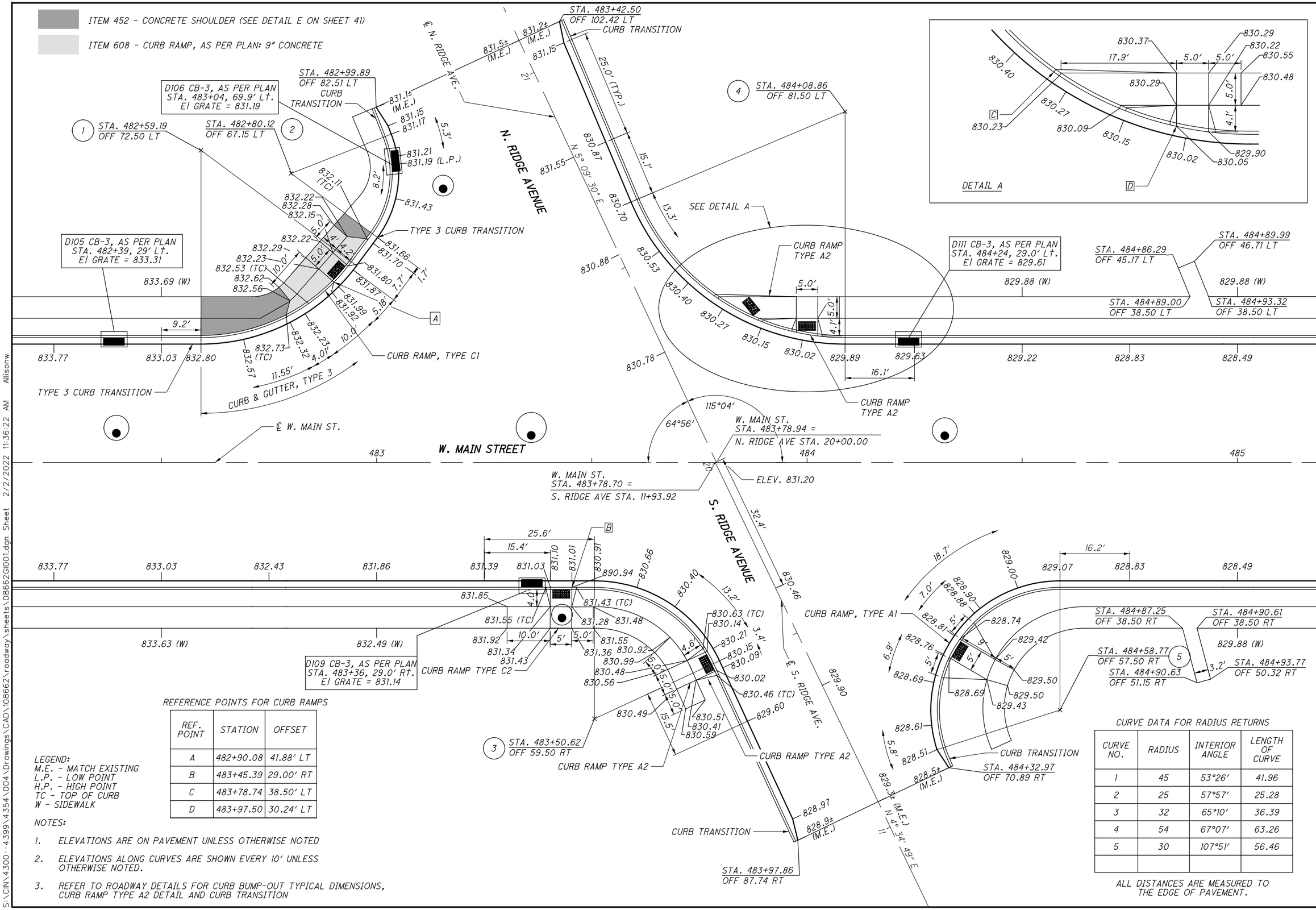

REFERENCE POINTS FOR CURB RAMPS

REF. POINT	STATION	OFFSET
A	482+90.08	41.88' LT
B	483+45.39	29.00' RT
C	483+78.74	38.50' LT
D	483+97.50	30.24' LT

LEGEND:
M.E. - MATCH EXISTING
L.P. - LOW POINT
H.P. - HIGH POINT
TC - TOP OF CURB
W - SIDEWALK

NOTES:

1. ELEVATIONS ARE ON PAVEMENT UNLESS OTHERWISE NOTED
2. ELEVATIONS ALONG CURVES ARE SHOWN EVERY 10' UNLESS OTHERWISE NOTED.
3. REFER TO ROADWAY DETAILS FOR CURB BUMP-OUT TYPICAL DIMENSIONS, CURB RAMP TYPE A2 DETAIL AND CURB TRANSITION

CURVE DATA FOR RADIUS RETURNS

CURVE NO.	RADIUS	INTERIOR ANGLE	LENGTH OF CURVE
1	45	53°26'	41.96
2	25	57°57'	25.28
3	32	65°10'	36.39
4	54	67°07'	63.26
5	30	107°51'	56.46

ALL DISTANCES ARE MEASURED TO THE EDGE OF PAVEMENT.

INTERSECTION DETAILS
WEST MAIN ST AND RIDGE AVE

MIA-41-09.49

S:\CIN\4300-4399\4354\004\Drawings\CAD\108662\roadway\sheets\086621G001.dgn Sheet 2/2/2022 11:36:22 AM Allisonw

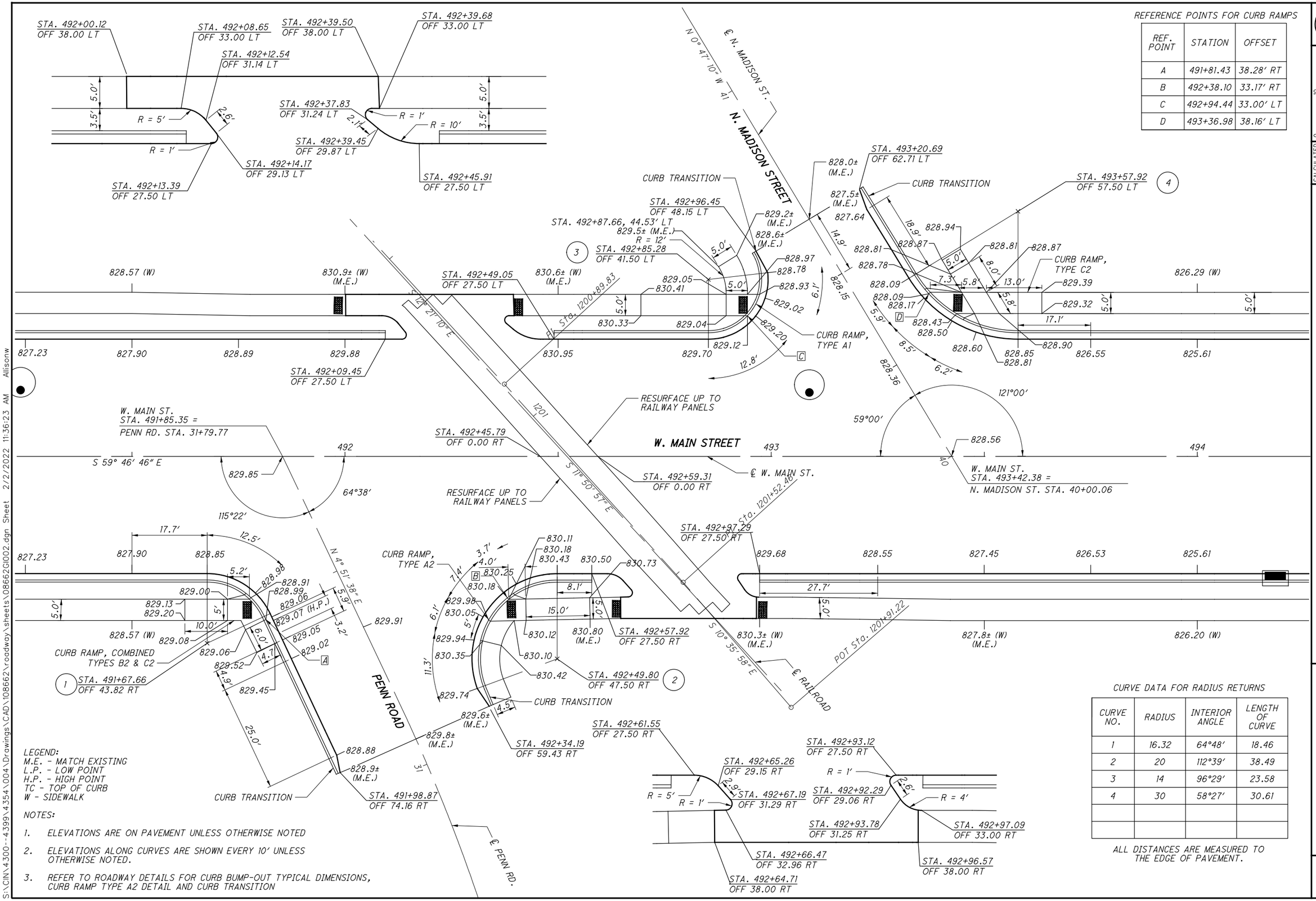

REFERENCE POINTS FOR CURB RAMPS

REF. POINT	STATION	OFFSET
A	491+81.43	38.28′ RT
B	492+38.10	33.17′ RT
C	492+94.44	33.00′ LT
D	493+36.98	38.16′ LT

CURVE DATA FOR RADIUS RETURNS

CURVE NO.	RADIUS	INTERIOR ANGLE	LENGTH OF CURVE
1	16.32	64°48′	18.46
2	20	112°39′	38.49
3	14	96°29′	23.58
4	30	58°27′	30.61

ALL DISTANCES ARE MEASURED TO THE EDGE OF PAVEMENT.

LEGEND:
M.E. - MATCH EXISTING
L.P. - LOW POINT
H.P. - HIGH POINT
TC - TOP OF CURB
W - SIDEWALK

NOTES:

1. ELEVATIONS ARE ON PAVEMENT UNLESS OTHERWISE NOTED
2. ELEVATIONS ALONG CURVES ARE SHOWN EVERY 10′ UNLESS OTHERWISE NOTED.
3. REFER TO ROADWAY DETAILS FOR CURB BUMP-OUT TYPICAL DIMENSIONS, CURB RAMP TYPE A2 DETAIL AND CURB TRANSITION

HORIZONTAL SCALE IN FEET 0 5 10 20

CALCULATED ATW
CHECKED JDH

INTERSECTION DETAILS
WEST MAIN ST, PENN RD AND N MADISON ST

MIA-41-09.49

S:\CIN\4300-4399\4354\004\Drawings\CAD\108662\roadway\sheets\08662GI002.dgn Sheet 2/2/2022 11:36:23 AM Allisonw

NOTE: ALL STATION AND OFFSETS ARE WITH RESPECT TO ℄ RAILROAD

SEE GENERAL NOTES FOR COORDINATION WITH CSX

FULL DEPTH ROADWAY PAVEMENT

FULL DEPTH COMMERCIAL DRIVEWAY PAVEMENT (SEE SHEET 116)

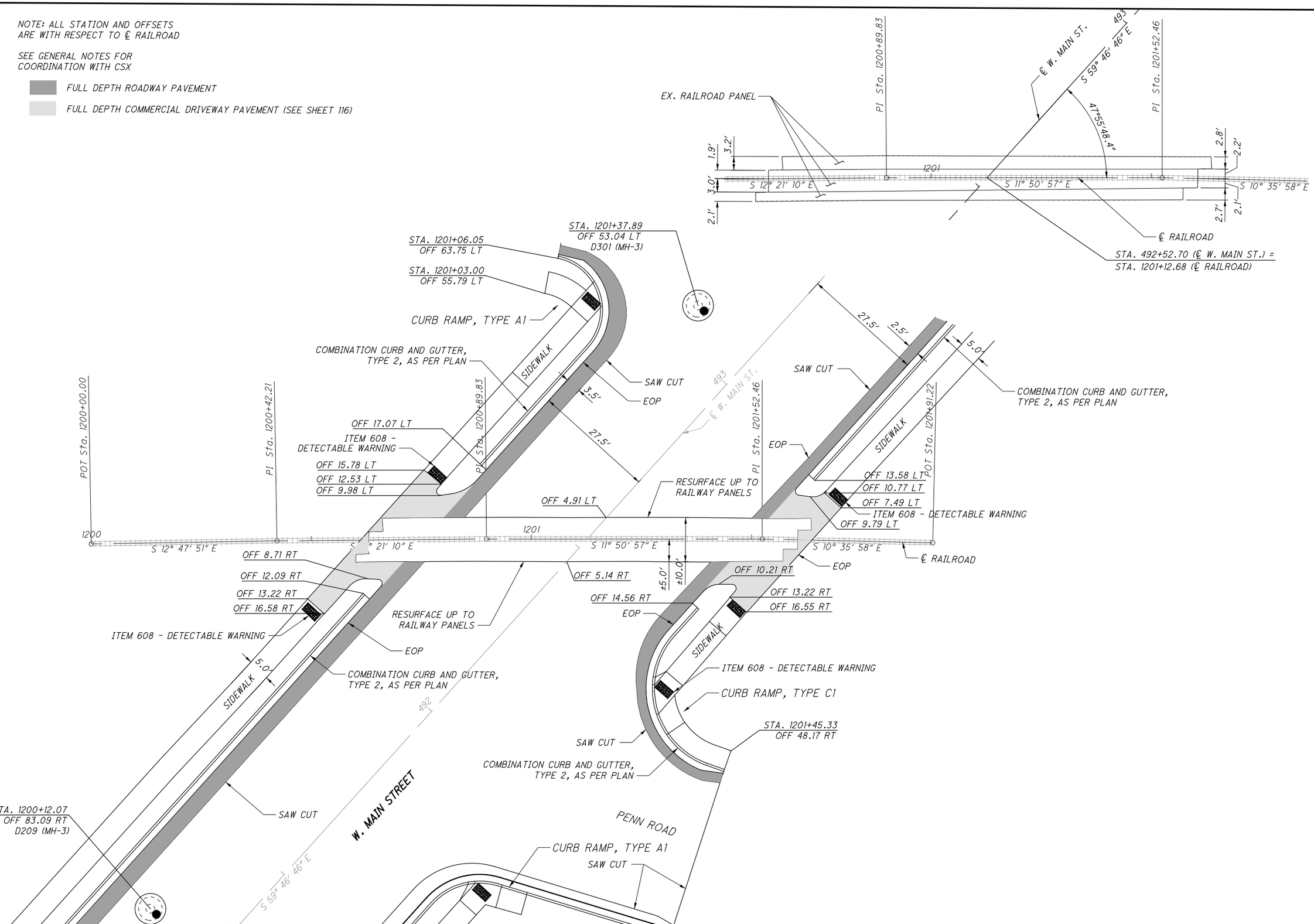

HORIZONTAL SCALE IN FEET 0 5 10 20

CALCULATED ATW

CHECKED JDH

INTERSECTION DETAILS
WEST MAIN AT CSXT RAILWAY CROSSING

MIA-41-09.49

S:\CIN\4300--4399\4354\004\Drawings\CAD\108662\roadway\sheets\08662GI012.dgn Sheet 2/2/2022 11:36:24 AM Allsonw

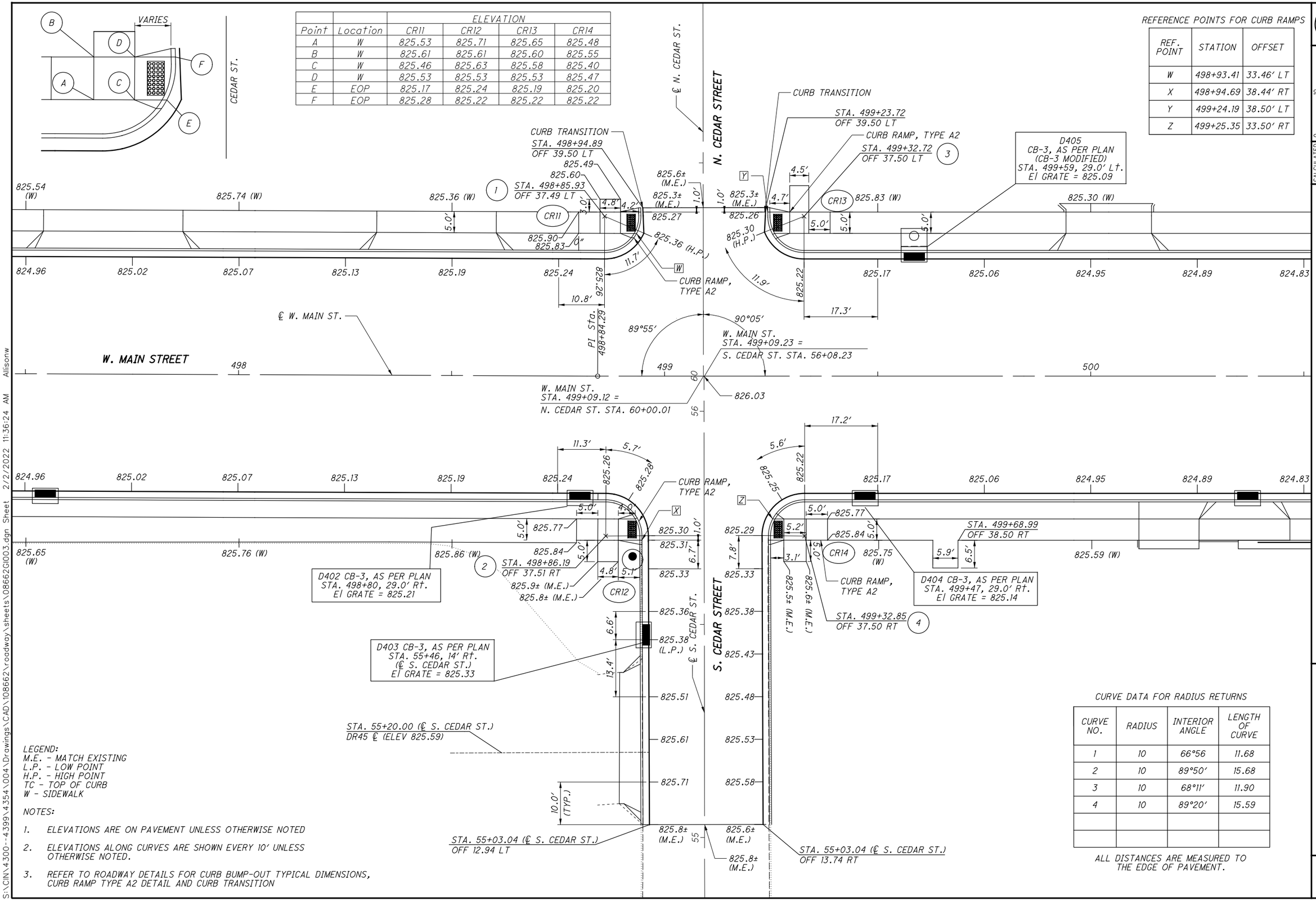

Point	Location	ELEVATION CR11	CR12	CR13	CR14
A	W	825.53	825.71	825.65	825.48
B	W	825.61	825.61	825.60	825.55
C	W	825.46	825.63	825.58	825.40
D	W	825.53	825.53	825.53	825.47
E	EOP	825.17	825.24	825.19	825.20
F	EOP	825.28	825.22	825.22	825.22

REFERENCE POINTS FOR CURB RAMPS

REF. POINT	STATION	OFFSET
W	498+93.41	33.46′ LT
X	498+94.69	38.44′ RT
Y	499+24.19	38.50′ LT
Z	499+25.35	33.50′ RT

CURVE DATA FOR RADIUS RETURNS

CURVE NO.	RADIUS	INTERIOR ANGLE	LENGTH OF CURVE
1	10	66°56	11.68
2	10	89°50′	15.68
3	10	68°11′	11.90
4	10	89°20′	15.59

ALL DISTANCES ARE MEASURED TO THE EDGE OF PAVEMENT.

LEGEND:
M.E. - MATCH EXISTING
L.P. - LOW POINT
H.P. - HIGH POINT
TC - TOP OF CURB
W - SIDEWALK

NOTES:

1. ELEVATIONS ARE ON PAVEMENT UNLESS OTHERWISE NOTED
2. ELEVATIONS ALONG CURVES ARE SHOWN EVERY 10′ UNLESS OTHERWISE NOTED.
3. REFER TO ROADWAY DETAILS FOR CURB BUMP-OUT TYPICAL DIMENSIONS, CURB RAMP TYPE A2 DETAIL AND CURB TRANSITION

HORIZONTAL SCALE IN FEET 0 5 10 20

CALCULATED ATW
CHECKED JDH

INTERSECTION DETAILS
WEST MAIN ST AND CEDAR ST

MIA-41-09.49

S:\CIN\4300--4399\4354\004\Drawings\CAD\108662\roadway\sheets\08662GI003.dgn Sheet 2/2/2022 11:36:24 AM Allisonw

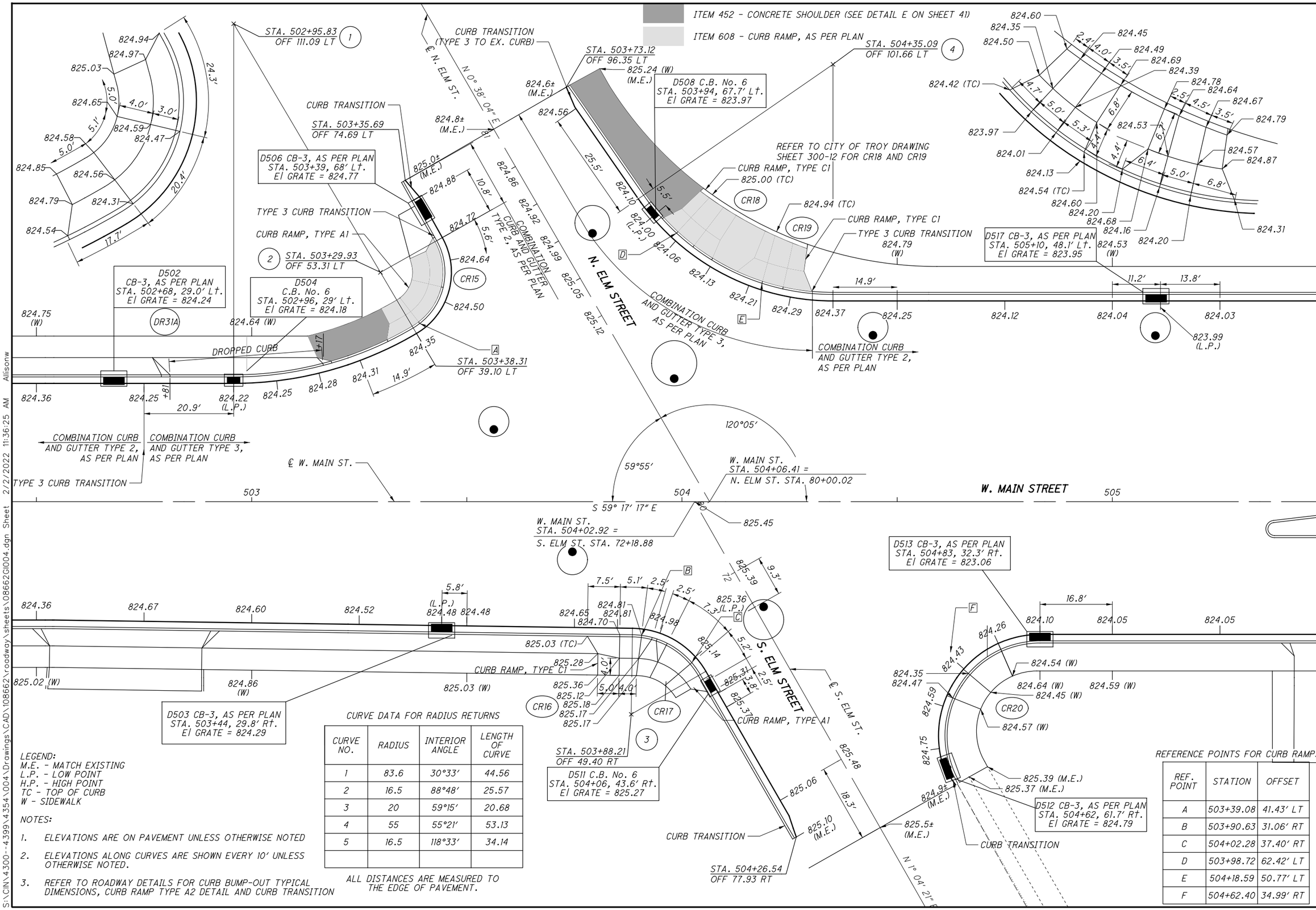

LEGEND:
M.E. - MATCH EXISTING
L.P. - LOW POINT
H.P. - HIGH POINT
TC - TOP OF CURB
W - SIDEWALK

NOTES:

1. ELEVATIONS ARE ON PAVEMENT UNLESS OTHERWISE NOTED
2. ELEVATIONS ALONG CURVES ARE SHOWN EVERY 10' UNLESS OTHERWISE NOTED.
3. REFER TO ROADWAY DETAILS FOR CURB BUMP-OUT TYPICAL DIMENSIONS, CURB RAMP TYPE A2 DETAIL AND CURB TRANSITION

CURVE DATA FOR RADIUS RETURNS

CURVE NO.	RADIUS	INTERIOR ANGLE	LENGTH OF CURVE
1	83.6	30°33'	44.56
2	16.5	88°48'	25.57
3	20	59°15'	20.68
4	55	55°21'	53.13
5	16.5	118°33'	34.14

ALL DISTANCES ARE MEASURED TO THE EDGE OF PAVEMENT.

REFERENCE POINTS FOR CURB RAMPS

REF. POINT	STATION	OFFSET
A	503+39.08	41.43' LT
B	503+90.63	31.06' RT
C	504+02.28	37.40' RT
D	503+98.72	62.42' LT
E	504+18.59	50.77' LT
F	504+62.40	34.99' RT

INTERSECTION DETAILS
WEST MAIN ST AND ELM ST

MIA-41-09.49

S:\CIN\4300--4399\4354\004\Drawings\CAD\108662\roadway\sheets\08662GI004.dgn Sheet 2/2/2022 11:36:25 AM Allisonw

LEGEND:
M.E. - MATCH EXISTING
L.P. - LOW POINT
H.P. - HIGH POINT
TC - TOP OF CURB
W - SIDEWALK

NOTES:

1. ELEVATIONS ARE ON PAVEMENT UNLESS OTHERWISE NOTED
2. ELEVATIONS ALONG CURVES ARE SHOWN EVERY 10' UNLESS OTHERWISE NOTED.
3. REFER TO ROADWAY DETAILS FOR CURB BUMP-OUT TYPICAL DIMENSIONS, CURB RAMP TYPE A2 DETAIL AND CURB TRANSITION

REFERENCE POINTS FOR CURB RAMPS

REF. POINT	STATION	OFFSET
U	511+74.31	40.50' RT
V	510+80.56	43.73' LT
W	511+26.02	42.52' RT
X	511+68.28	46.88' LT
Y	511+76.82	34.93' LT
Z	511+83.94	30.20' RT

CURVE DATA FOR RADIUS RETURNS

CURVE NO.	RADIUS	INTERIOR ANGLE	LENGTH OF CURVE
1	65	77°19	87.72
2	175	14°25'	44.02
3	24	84°59'	33.60
4	15	89°51'	23.52
5	22	85°45'	32.93

ALL DISTANCES ARE MEASURED TO THE EDGE OF PAVEMENT.

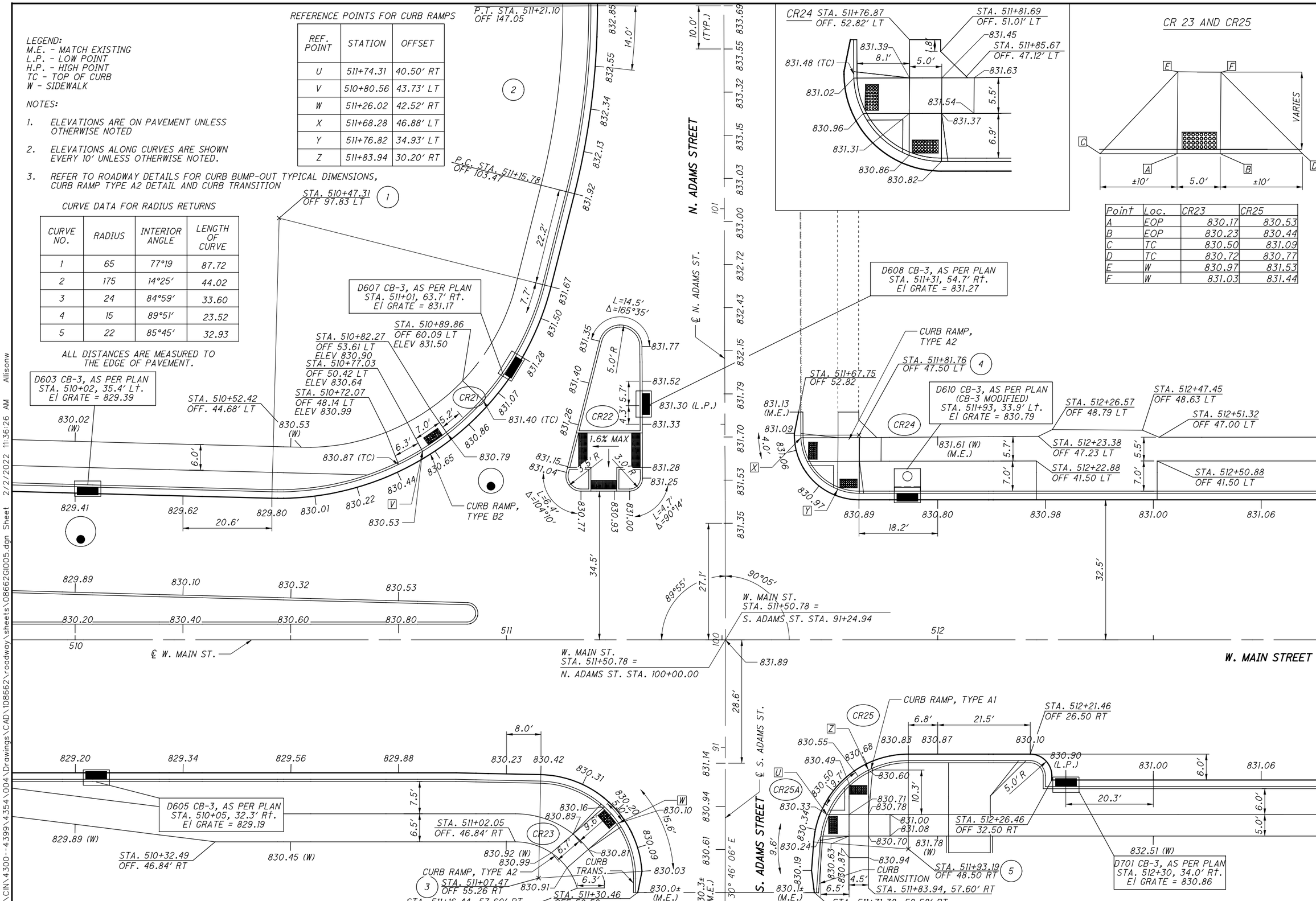

Point	Loc.	CR23	CR25
A	EOP	830.17	830.53
B	EOP	830.23	830.44
C	TC	830.50	831.09
D	TC	830.72	830.77
E	W	830.97	831.53
F	W	831.03	831.44

HORIZONTAL SCALE IN FEET 0 5 10 20

CALCULATED ATW
CHECKED JDH

INTERSECTION DETAILS
WEST MAIN ST AND ADAMS ST

MIA-41-09.49

S:\CIN\4300-4399\4354\004\Drawings\CAD\108662\roadway\sheets\08662GI005.dgn Sheet 2/2/2022 11:36:26 AM Allisonw

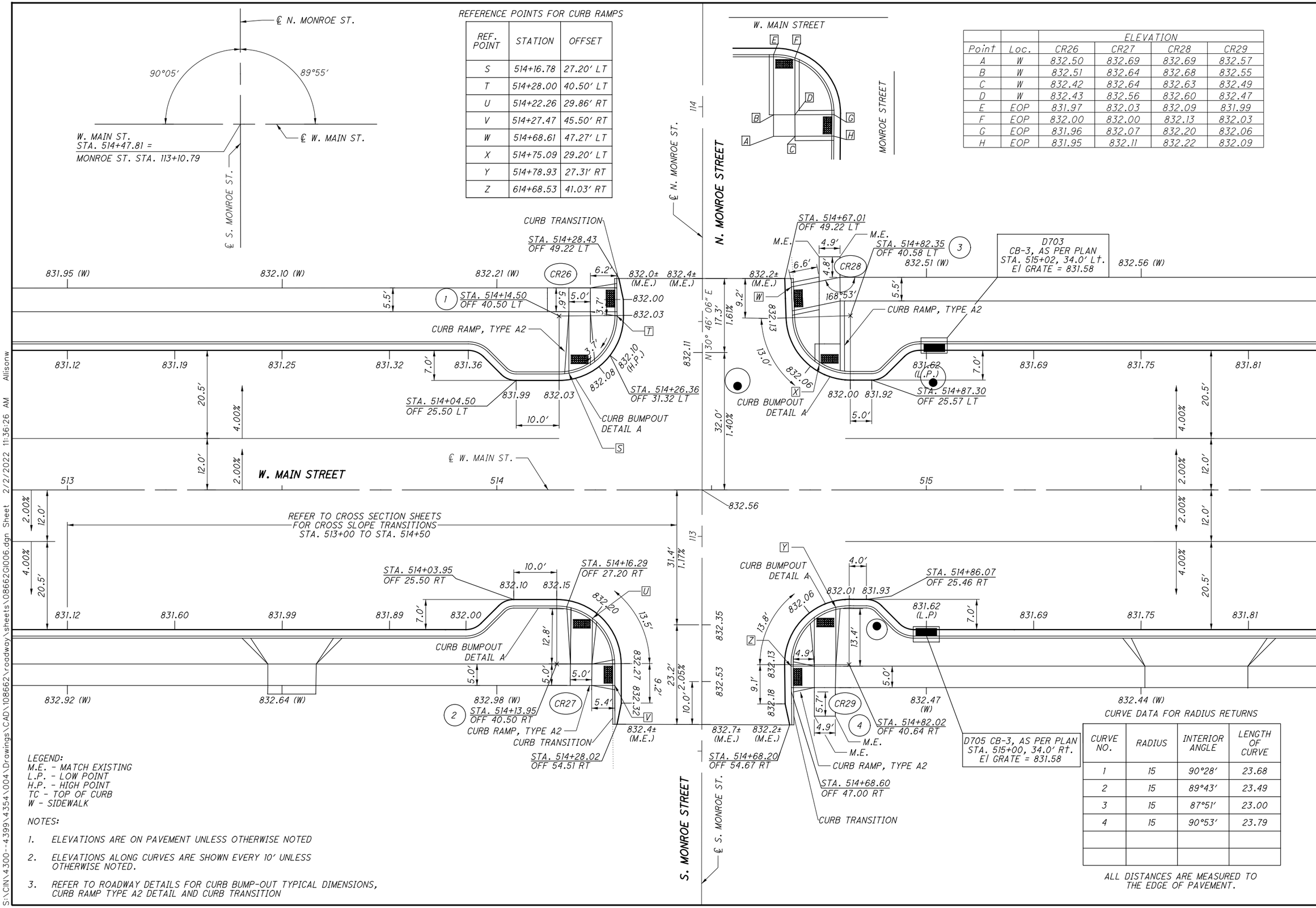

REFERENCE POINTS FOR CURB RAMPS

REF. POINT	STATION	OFFSET
S	514+16.78	27.20′ LT
T	514+28.00	40.50′ LT
U	514+22.26	29.86′ RT
V	514+27.47	45.50′ RT
W	514+68.61	47.27′ LT
X	514+75.09	29.20′ LT
Y	514+78.93	27.31′ RT
Z	614+68.53	41.03′ RT

Point	Loc.	ELEVATION CR26	CR27	CR28	CR29
A	W	832.50	832.69	832.69	832.57
B	W	832.51	832.64	832.68	832.55
C	W	832.42	832.64	832.63	832.49
D	W	832.43	832.56	832.60	832.47
E	EOP	831.97	832.03	832.09	831.99
F	EOP	832.00	832.00	832.13	832.03
G	EOP	831.96	832.07	832.20	832.06
H	EOP	831.95	832.11	832.22	832.09

LEGEND:
M.E. - MATCH EXISTING
L.P. - LOW POINT
H.P. - HIGH POINT
TC - TOP OF CURB
W - SIDEWALK

NOTES:

1. ELEVATIONS ARE ON PAVEMENT UNLESS OTHERWISE NOTED
2. ELEVATIONS ALONG CURVES ARE SHOWN EVERY 10′ UNLESS OTHERWISE NOTED.
3. REFER TO ROADWAY DETAILS FOR CURB BUMP-OUT TYPICAL DIMENSIONS, CURB RAMP TYPE A2 DETAIL AND CURB TRANSITION

CURVE DATA FOR RADIUS RETURNS

CURVE NO.	RADIUS	INTERIOR ANGLE	LENGTH OF CURVE
1	15	90°28′	23.68
2	15	89°43′	23.49
3	15	87°51′	23.00
4	15	90°53′	23.79

ALL DISTANCES ARE MEASURED TO THE EDGE OF PAVEMENT.

HORIZONTAL SCALE IN FEET 0 5 10 20

CALCULATED ATW
CHECKED JDH

INTERSECTION DETAILS WEST MAIN ST AND MONROE ST

MIA-41-09.49

S:\CIN\4300--4399\4354\004\Drawings\CAD\108662\roadway\sheets\08662GI006.dgn Sheet 2/2/2022 11:36:26 AM Alisonw

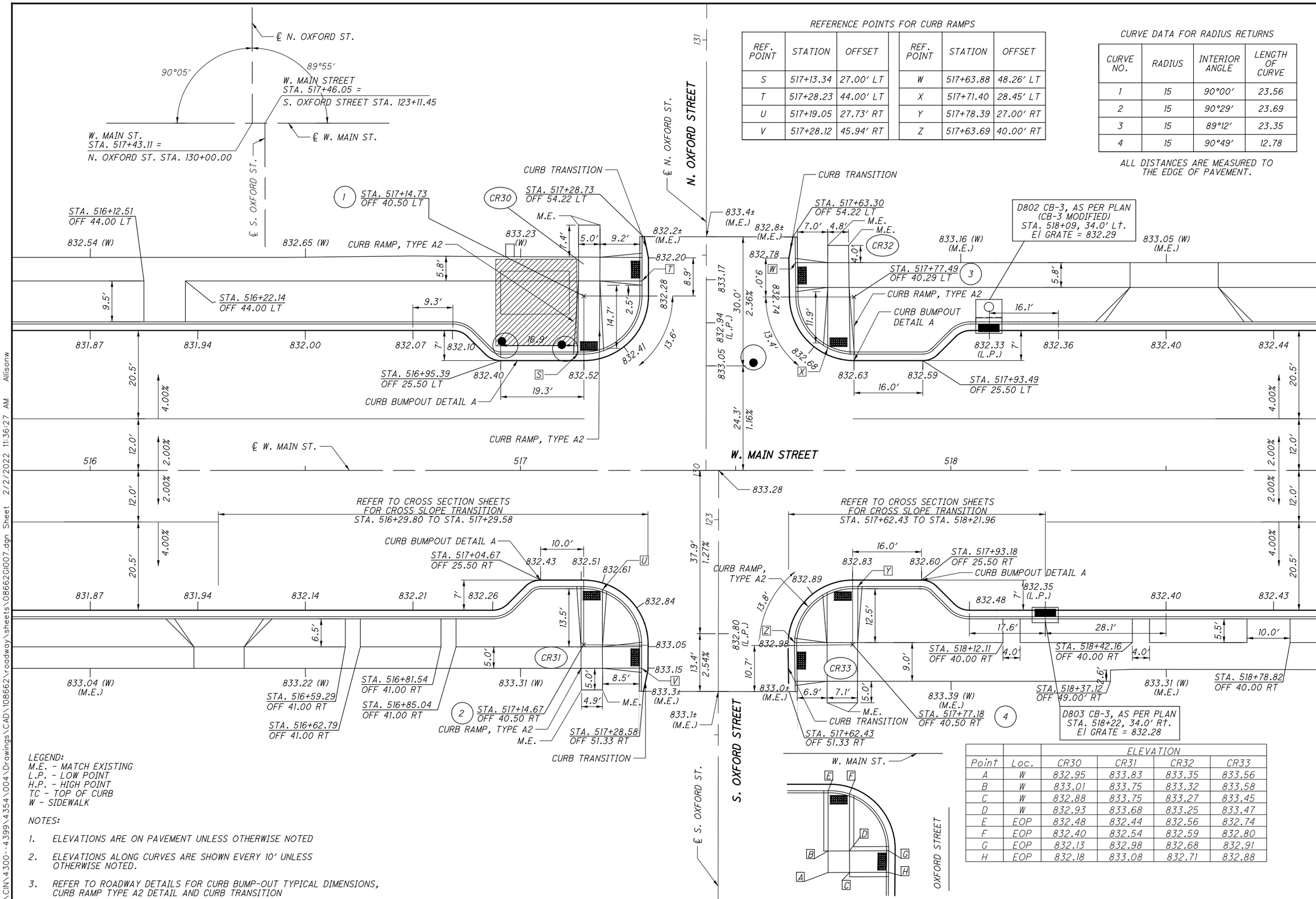

REFERENCE POINTS FOR CURB RAMPS

REF. POINT	STATION	OFFSET	REF. POINT	STATION	OFFSET
S	517+13.34	27.00′ LT	W	517+63.88	48.26′ LT
T	517+28.23	44.00′ LT	X	517+71.40	28.45′ LT
U	517+19.05	27.73′ RT	Y	517+78.39	27.00′ RT
V	517+28.12	45.94′ RT	Z	517+63.69	40.00′ RT

CURVE DATA FOR RADIUS RETURNS

CURVE NO.	RADIUS	INTERIOR ANGLE	LENGTH OF CURVE
1	15	90°00′	23.56
2	15	90°29′	23.69
3	15	89°12′	23.35
4	15	90°49′	12.78

ALL DISTANCES ARE MEASURED TO THE EDGE OF PAVEMENT.

LEGEND:
M.E. - MATCH EXISTING
L.P. - LOW POINT
H.P. - HIGH POINT
TC - TOP OF CURB
W - SIDEWALK

NOTES:

1. ELEVATIONS ARE ON PAVEMENT UNLESS OTHERWISE NOTED
2. ELEVATIONS ALONG CURVES ARE SHOWN EVERY 10′ UNLESS OTHERWISE NOTED.
3. REFER TO ROADWAY DETAILS FOR CURB BUMP-OUT TYPICAL DIMENSIONS, CURB RAMP TYPE A2 DETAIL AND CURB TRANSITION

		ELEVATION			
Point	Loc.	CR30	CR31	CR32	CR33
A	W	832.95	833.83	833.35	833.56
B	W	833.01	833.75	833.32	833.58
C	W	832.88	833.75	833.27	833.45
D	W	832.93	833.68	833.25	833.47
E	EOP	832.48	832.44	832.56	832.74
F	EOP	832.40	832.54	832.59	832.80
G	EOP	832.13	832.98	832.68	832.91
H	EOP	832.18	833.08	832.71	832.88

INTERSECTION DETAILS
WEST MAIN ST AND OXFORD ST

MIA-41-09.49

S:\CIN\4300-4399\4354\004\Drawings\CAD\108662\roadway\sheets\086620I007.dgn Sheet 2/2/2022 11:36:27 AM Allisonw

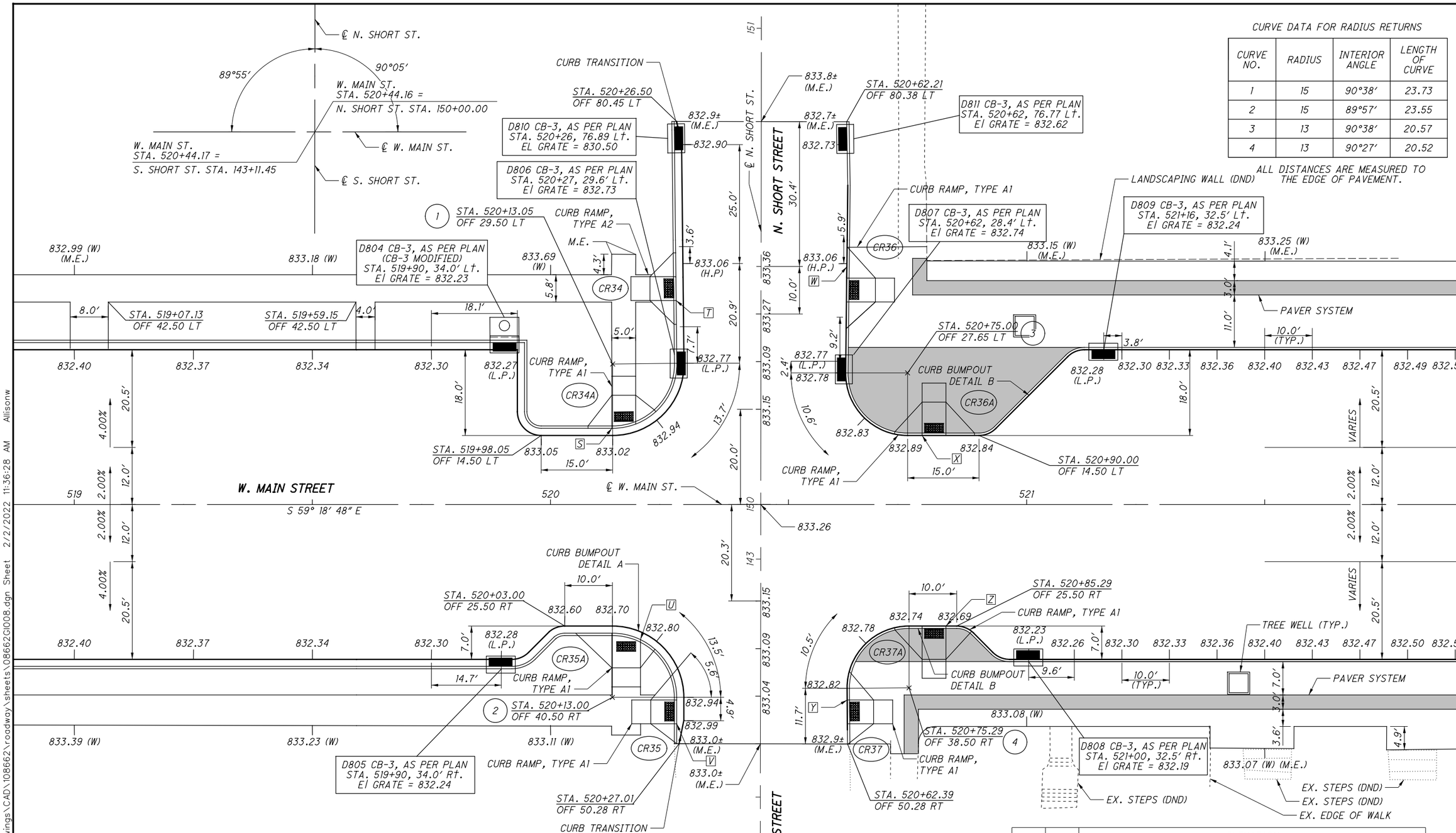

CURVE DATA FOR RADIUS RETURNS

CURVE NO.	RADIUS	INTERIOR ANGLE	LENGTH OF CURVE
1	15	90°38′	23.73
2	15	89°57′	23.55
3	13	90°38′	20.57
4	13	90°27′	20.52

ALL DISTANCES ARE MEASURED TO THE EDGE OF PAVEMENT.

LEGEND:
M.E. - MATCH EXISTING
L.P. - LOW POINT
H.P. - HIGH POINT
TC - TOP OF CURB
W - SIDEWALK

ITEM 608 - WALKWAY, MISC.: PAVER SYSTEM OR ITEM 608 - CURB RAMP, AS PER PLAN: PAVER CURB RAMP

NOTES:

1. ELEVATIONS ARE ON PAVEMENT UNLESS OTHERWISE NOTED
2. ELEVATIONS ALONG CURVES ARE SHOWN EVERY 10′ UNLESS OTHERWISE NOTED.
3. REFER TO ROADWAY DETAILS FOR CURB BUMP-OUT TYPICAL DIMENSIONS, CURB RAMP TYPE A2 DETAIL AND CURB TRANSITION

REFERENCE POINTS FOR CURB RAMPS

REF. POINT	STATION	OFFSET	REF. POINT	STATION	OFFSET
S	520+12.90	16.00′ LT	W	520+62.25	49.93′ LT
T	520+26.41	42.84′ LT	X	520+78.05	14.50′ LT
U	520+18.90	28.36′ RT	Y	520+62.31	41.05′ RT
V	520+26.51	46.05′ RT	Z	520+83.05	25.50′ RT

		ELEVATION							
Point	Loc.	CR34	CR34A	CR35	CR35A	CR36	CR36A	CR37	CR37A
A	EOP	833.02	832.85	833.00	832.47	833.02	832.88	832.83	832.70
B	EOP	832.98	832.81	832.95	832.53	832.95	832.86	832.85	832.73
C	TC	833.44	833.37	833.54	833.12	833.52	833.37	833.31	833.10
D	TC	833.35	833.27	833.38	832.46	833.37	833.34	833.36	833.25
E	W	833.32	833.35	833.24	832.93	833.35	833.37	833.25	833.14
F	W	833.3	833.28	833.31	832.99	833.33	833.35	833.27	833.17
G	W	833.40	833.41	833.27	832.99	833.43	833.43	833.32	833.20
H	W	833.38	833.34	833.34	833.05	833.41	833.41	833.34	833.23
LENGTH		5.50	6.45	5.50	6.80	5.50	6.50	5.50	6.50

HORIZONTAL SCALE IN FEET 0 5 10 20

CALCULATED ATW
CHECKED JDH

INTERSECTION DETAILS WEST MAIN ST AND SHORT ST

MIA-41-09.49

S:\CIN\4300-4399\4354\004\Drawings\CAD\108662\roadway\sheets\08662GI008.dgn Sheet 2/2/2022 11:36:28 AM Allisonw

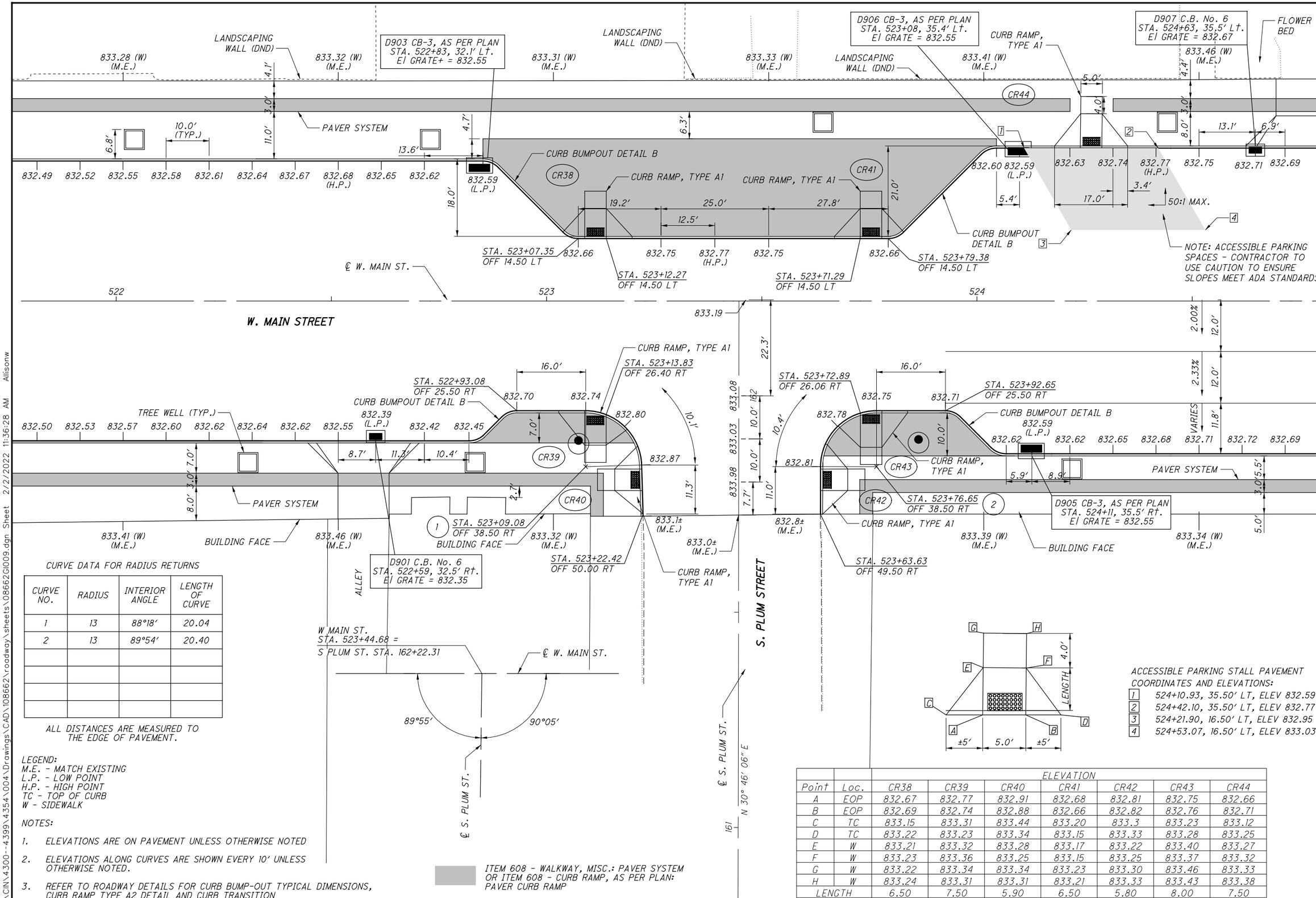

CURVE DATA FOR RADIUS RETURNS

CURVE NO.	RADIUS	INTERIOR ANGLE	LENGTH OF CURVE
1	13	88°18'	20.04
2	13	89°54'	20.40

ALL DISTANCES ARE MEASURED TO THE EDGE OF PAVEMENT.

LEGEND:
M.E. - MATCH EXISTING
L.P. - LOW POINT
H.P. - HIGH POINT
TC - TOP OF CURB
W - SIDEWALK

NOTES:

1. ELEVATIONS ARE ON PAVEMENT UNLESS OTHERWISE NOTED
2. ELEVATIONS ALONG CURVES ARE SHOWN EVERY 10' UNLESS OTHERWISE NOTED.
3. REFER TO ROADWAY DETAILS FOR CURB BUMP-OUT TYPICAL DIMENSIONS, CURB RAMP TYPE A2 DETAIL AND CURB TRANSITION

ACCESSIBLE PARKING STALL PAVEMENT COORDINATES AND ELEVATIONS:

1. 524+10.93, 35.50' LT, ELEV 832.59
2. 524+42.10, 35.50' LT, ELEV 832.77
3. 524+21.90, 16.50' LT, ELEV 832.95
4. 524+53.07, 16.50' LT, ELEV 833.03

Point	Loc.	ELEVATION CR38	CR39	CR40	CR41	CR42	CR43	CR44
A	EOP	832.67	832.77	832.91	832.68	832.81	832.75	832.66
B	EOP	832.69	832.74	832.88	832.66	832.82	832.76	832.71
C	TC	833.15	833.31	833.44	833.20	833.3	833.23	833.12
D	TC	833.22	833.23	833.34	833.15	833.33	833.28	833.25
E	W	833.21	833.32	833.28	833.17	833.22	833.40	833.27
F	W	833.23	833.36	833.25	833.15	833.25	833.37	833.32
G	W	833.22	833.34	833.34	833.23	833.30	833.46	833.33
H	W	833.24	833.31	833.31	833.21	833.33	833.43	833.38
LENGTH		6.50	7.50	5.90	6.50	5.80	8.00	7.50

INTERSECTION DETAILS
WEST MAIN ST AND S PLUM ST

MIA-41-09.49

S:\CIN\4300--4399\4354\004\Drawings\CAD\108662\roadway\sheets\08662GI009.dgn Sheet 2/2/2022 11:36:28 AM Alisonw

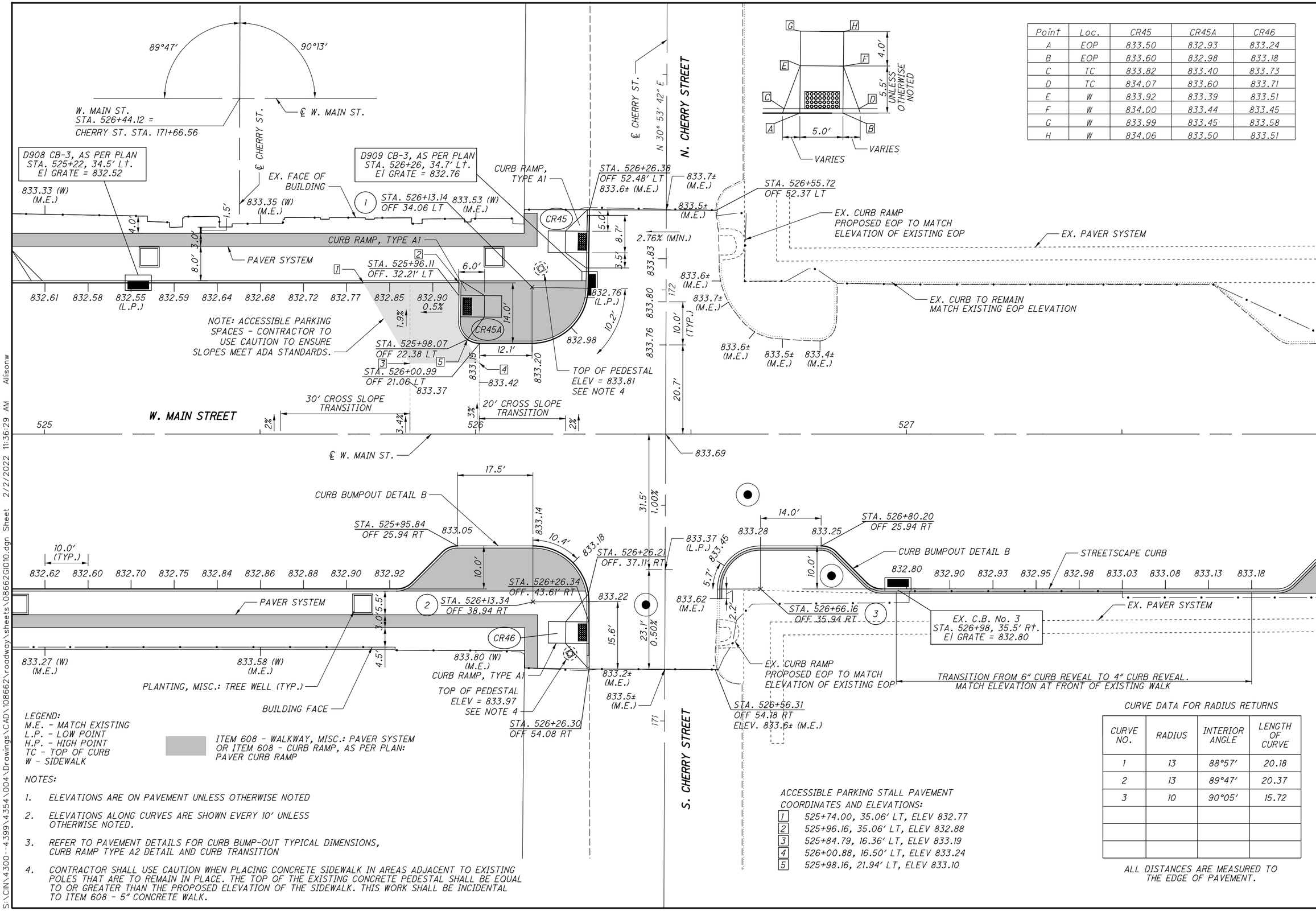

Point	Loc.	CR45	CR45A	CR46
A	EOP	833.50	832.93	833.24
B	EOP	833.60	832.98	833.18
C	TC	833.82	833.40	833.73
D	TC	834.07	833.60	833.71
E	W	833.92	833.39	833.51
F	W	834.00	833.44	833.45
G	W	833.99	833.45	833.58
H	W	834.06	833.50	833.51

LEGEND:
M.E. - MATCH EXISTING
L.P. - LOW POINT
H.P. - HIGH POINT
TC - TOP OF CURB
W - SIDEWALK

ITEM 608 - WALKWAY, MISC.: PAVER SYSTEM OR ITEM 608 - CURB RAMP, AS PER PLAN: PAVER CURB RAMP

NOTES:

1. ELEVATIONS ARE ON PAVEMENT UNLESS OTHERWISE NOTED
2. ELEVATIONS ALONG CURVES ARE SHOWN EVERY 10′ UNLESS OTHERWISE NOTED.
3. REFER TO PAVEMENT DETAILS FOR CURB BUMP-OUT TYPICAL DIMENSIONS, CURB RAMP TYPE A2 DETAIL AND CURB TRANSITION
4. CONTRACTOR SHALL USE CAUTION WHEN PLACING CONCRETE SIDEWALK IN AREAS ADJACENT TO EXISTING POLES THAT ARE TO REMAIN IN PLACE. THE TOP OF THE EXISTING CONCRETE PEDESTAL SHALL BE EQUAL TO OR GREATER THAN THE PROPOSED ELEVATION OF THE SIDEWALK. THIS WORK SHALL BE INCIDENTAL TO ITEM 608 - 5″ CONCRETE WALK.

ACCESSIBLE PARKING STALL PAVEMENT COORDINATES AND ELEVATIONS:

1. 525+74.00, 35.06′ LT, ELEV 832.77
2. 525+96.16, 35.06′ LT, ELEV 832.88
3. 525+84.79, 16.36′ LT, ELEV 833.19
4. 526+00.88, 16.50′ LT, ELEV 833.24
5. 525+98.16, 21.94′ LT, ELEV 833.10

CURVE DATA FOR RADIUS RETURNS

CURVE NO.	RADIUS	INTERIOR ANGLE	LENGTH OF CURVE
1	13	88°57′	20.18
2	13	89°47′	20.37
3	10	90°05′	15.72

ALL DISTANCES ARE MEASURED TO THE EDGE OF PAVEMENT.

HORIZONTAL SCALE IN FEET 0 5 10 20

CALCULATED ATW
CHECKED JDH

INTERSECTION DETAILS
WEST MAIN ST AND CHERRY ST

MIA-41-09.49

S:\CIN\4300-4399\4354\004\Drawings\CAD\108662\roadway\sheets\086620l010.dgn Sheet 2/2/2022 11:36:29 AM Allisonw

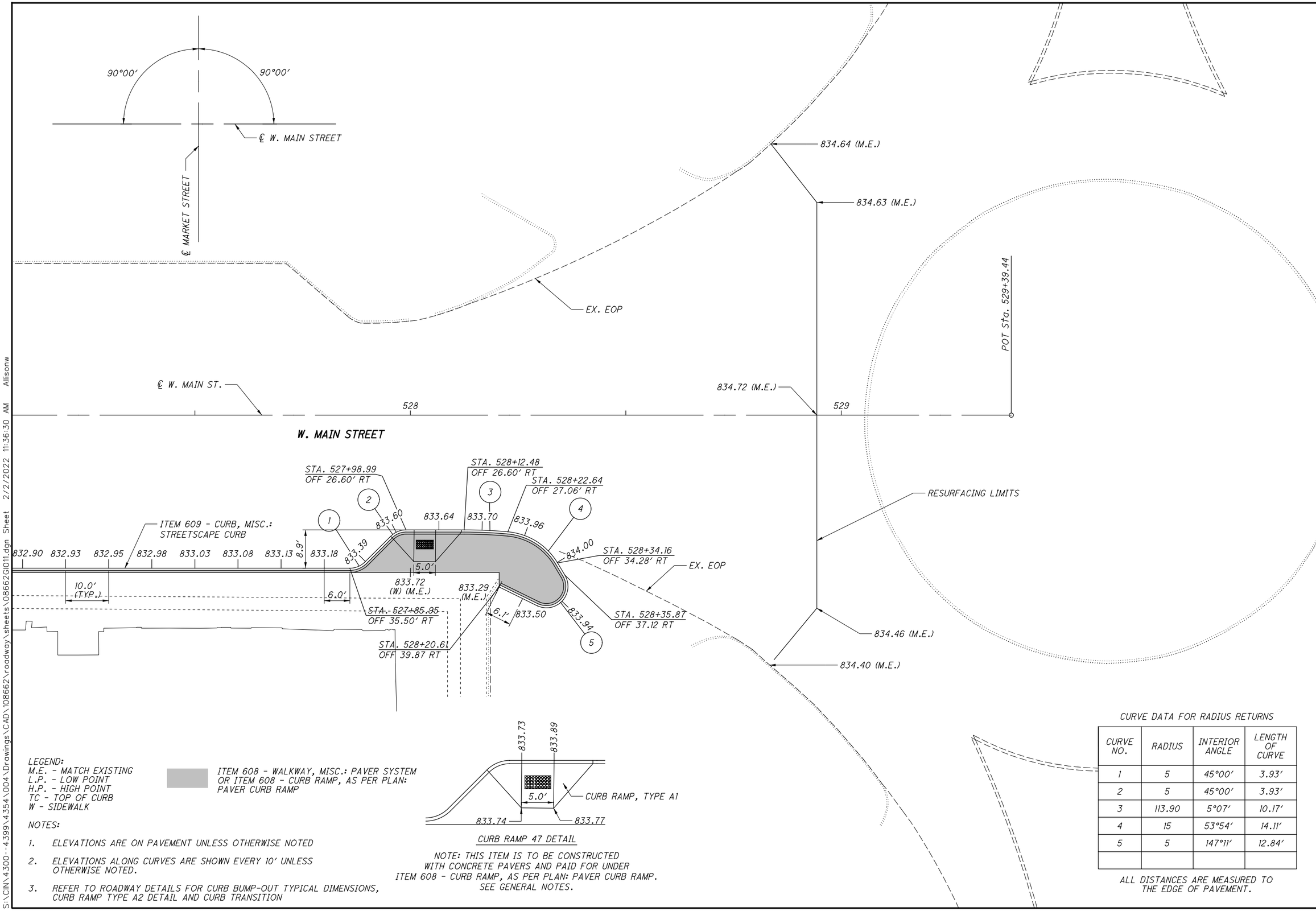

LEGEND:
M.E. - MATCH EXISTING
L.P. - LOW POINT
H.P. - HIGH POINT
TC - TOP OF CURB
W - SIDEWALK

ITEM 608 - WALKWAY, MISC.: PAVER SYSTEM OR ITEM 608 - CURB RAMP, AS PER PLAN: PAVER CURB RAMP

NOTES:

1. ELEVATIONS ARE ON PAVEMENT UNLESS OTHERWISE NOTED
2. ELEVATIONS ALONG CURVES ARE SHOWN EVERY 10′ UNLESS OTHERWISE NOTED.
3. REFER TO ROADWAY DETAILS FOR CURB BUMP-OUT TYPICAL DIMENSIONS, CURB RAMP TYPE A2 DETAIL AND CURB TRANSITION

CURB RAMP 47 DETAIL

NOTE: THIS ITEM IS TO BE CONSTRUCTED WITH CONCRETE PAVERS AND PAID FOR UNDER ITEM 608 - CURB RAMP, AS PER PLAN: PAVER CURB RAMP. SEE GENERAL NOTES.

CURVE DATA FOR RADIUS RETURNS

CURVE NO.	RADIUS	INTERIOR ANGLE	LENGTH OF CURVE
1	5	45°00′	3.93′
2	5	45°00′	3.93′
3	113.90	5°07′	10.17′
4	15	53°54′	14.11′
5	5	147°11′	12.84′

ALL DISTANCES ARE MEASURED TO THE EDGE OF PAVEMENT.

HORIZONTAL SCALE IN FEET 0 5 10 20

CALCULATED ATW
CHECKED JDH

INTERSECTION DETAILS
WEST MAIN ST AND MARKET ST

MIA-41-09.49

S:\CIN\4300-4399\4354\004\Drawings\CAD\108662\roadway\sheets\08662GI011.dgn Sheet 2/2/2022 11:36:30 AM Allisonw

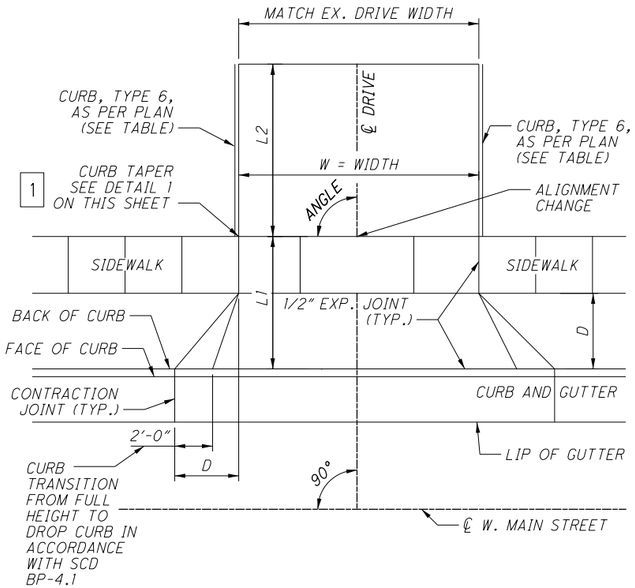

D = CURB LAWN WIDTH. SEE TYPICAL SECTION.
THE WIDTH OF THE HORIZONTAL FLARED EDGE IS EQUAL TO D.
THE APRON FLARES VERTICALLY OVER 2' AT THE EOP.

DRIVE APRON DETAIL

RESIDENTIAL: #ITEM 452 - 6" NON-REINFORCED CONCRETE
OR
ITEM 441 - 1¼" ASPHALT CONCRETE SURFACE COURSE, TYPE 1, (448), (DRIVEWAYS)
ITEM 407 - TACK COAT
ITEM 302 - 4¾" ASPHALT CONCRETE BASE, PG64-22
OR
ITEM 304 - 6" AGGREGATE BASE

COMMERCIAL: #ITEM 452 - 8" NON- REINFORCED CONCRETE
OR
ITEM 441 - 1¼" ASPHALT CONCRETE SURFACE COURSE, TYPE 1, (448), (DRIVEWAYS)
ITEM 441 - 1¾" ASPHALT CONCRETE INTERMEDIATE COURSE, TYPE 2, (448) (DRIVEWAYS)
ITEM 407 - TACK COAT
ITEM 302 - 5" ASPHALT CONCRETE BASE, PG64-22

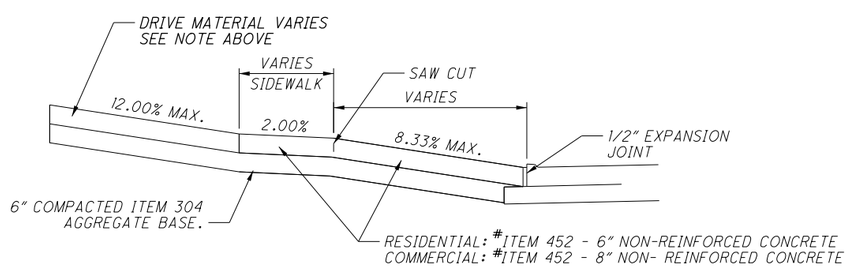

DROP CURB DETAILS AT DRIVEWAYS

SHEET NO.	DRIVE NUMBER	STATION	SIDE	DRIVE MATERIAL	DRIVE TYPE	DRIVE ANGLE	APRON LENGTH "L1"	DRIVEWAY LENGTH "L2"	WIDTH "W"	CADD GENERATED SURFACE AREA	202 PAVEMENT REMOVED	202 CURB REMOVED	204 SUBGRADE COMPACTION	302 ASPHALT CONCRETE BASE, PG64-22	304 AGGREGATE BASE	407 TACK COAT (0.06 GAL/SY)	441 ASPHALT CONCRETE INTERMEDIATE COURSE, TYPE 2, (448), (DRIVEWAYS)	441 ASPHALT CONCRETE SURFACE COURSE, TYPE 1, (448), (DRIVEWAYS)	452 6" NON-REINFORCED CONCRETE PAVMENT	452 8" NON-REINFORCED CONCRETE PAVEMENT	609 CURB, TYPE 6, AS PER PLAN
						DD-MM	FT.	FT.	FT.	SF	SY	FT	SY	CY	CY	GAL	CY	CY	SY	SY	FT
47	DR1	481+83	LT	ASPH	COMM	90-00	9	4	38.8	513.8	69.1	5.5	57.1	2.3	9.5	17.9	0.8	0.6		40.5	8
47	DR2	482+13	RT	ASPH	COMM	90-00	9	1.3	40.8	429.1	62.9		47.7	0.7	7.9	5.6	0.3	0.2		42.5	
47	DR3	485+70	LT	ASPH	COMM	77-16	9	12.2	20.3	441.2	60.3		49.0	3.8	8.2	29.2	1.3	0.9		21.9	
47	DR4	486+06	RT	CONC	RES	90-00	9	4.8	10	406.7	22.2	4.5	45.2		19.2				37.4		4.8
47	DR5	486+26	RT	GRAV	RES	90-00	9	3.5	10.7		25.6										
48	DR6	487+24	RT	ASPH	RES	90-00	9	5.1	14.1	223.1	29.4		24.8	1.7	4.1	13.5		0.4	12.3		
48	DR7##	487+45	RT	CONC	RES	90-00	9	1.5	11	171.4	23.7		19.0		3.2				23.0		
48	DR8	487+70	LT	ASPH	COMM	75-14	9	13.4	25.8	591.2	81.9	15	65.7	5.1	10.9	39.6	1.8	1.3		29.0	15
48	DR9	488+08	RT	CONC	RES	90-00	9	0	10	106	16.1		11.8		2.0				11.8		
48	DR10	488+17	LT	ASPH	COMM	90-00	9	4	34.5	464.5	72.1	9	51.6	2.1	8.6	16.5	0.7	0.5		36.3	8
48	DR11	488+92	RT	CONC	RES	90-00	9	0	14.8	241	37.8	3.5	26.8		7.5				24.8		3
48	DR12	489+03	RT	GRAV	RES	108-43	9	2	8.2							2.2					
48	DR13	489+78	RT	ASPH	RES	114-57	9	2.8	16.8	209.6	32.0		23.3	0.6	3.9	5.1		0.2	18.6		
48	DR14	490+17	LT	ASPH	COMM	90-00	9	4.1	35	477.8	71.6	8	53.1	2.1	8.8	17.4		0.6		37.0	8
48	DR15	490+34	RT	CONC	RES	119-31	9	2.3	11.2	138.6	23.9		15.4		2.6				15.4		
	DR16											NOT USED									
49	DR17	494+55	LT	CONC	COMM	90-00	9	7.5	30	467.6	85.7	17	52.0		8.7					52.0	15
49	DR18	494+78	RT	ASPH	COMM	90-00	9	0	27	259	32.7		28.8		4.8					28.8	
49	DR19	495+70	LT	ASPH	COMM	90-00	9	0	17.8	277.8	29.4		30.9	1.6	5.1	1.4	0.6	0.4		40.7	30
49	DR20	495+99	LT	ASPH	COMM	90-00	9	0	14.8	149.4	23.8		16.6		2.8						
49	DR21	496+54	LT	ASPH	COMM	90-00	9	0	25	241.4	35.9		26.8		4.5					26.8	
49	DR22	496+65	RT	ASPH	COMM	90-00	9	2.3	57.7	666.3	91.4	2	74.0	2.0	12.3	15.7	0.7	0.5		59.5	5
50	DR23	497+70	LT	ASPH	COMM	90-00	9	0	32.7	310.3	44.6		34.5		5.7					34.5	
50	DR24	498+46	LT	ASPH	COMM	90-00	9	0	28	268.5	41.1		29.8		5.0					29.8	
50	DR25	500+04	LT	ASPH	COMM	90-00	9	2	20	237.9	34.1	4	26.4	0.6	4.4	5.0	0.2	0.2		21.8	4
50	DR26 ✠	500+19	RT	ASPH	COMM	90-00	9	2	14	163.1	28.4	12	18.1	0.4	3.0	3.4	0.2	0.1		15.0	12
50	DR27	500+65	RT	ASPH	COMM	90-00	9	2	36.5	442.2	72.1		49.1	1.9	8.2	15.1	0.7	0.5		35.1	
50	DR28	500+73	LT	ASPH	COMM	90-00	9	2	19.7	231.1	39.4	4	25.7	0.6	4.3	4.5	0.2	0.1		21.5	4
50	DR29	501+51	RT	ASPH	COMM	90-00	9	2	29	335.5	54.9	2	37.3	0.9	6.2	7.0	0.3	0.2		30.8	2
50	DR30	501+58	LT	ASPH	COMM	90-00	9	0	30	286	42.5		31.8		5.3					31.8	
51	DR31	502+16	LT	CONC	COMM	90-00	9	0	41.2	386.8	56.9		43.0		7.2					43.0	
51	DR31A	503+39	LT	CONC	COMM	135-00	9	0	40.5	389.4	43.3		43.3		7.2					43.3	
51	DR32	502+71	RT	ASPH	COMM	90-00	9	5	35.7	512.2	79.1	13	56.9	2.7	9.5	21.3	1.0	0.7		37.2	10
51	DR33*	505+65	RT	ASPH	COMM	90-00	6.5	21.5	46	1288.1	184.0		143.1	15.1	23.9	117.6	5.3	3.8		34.2	
52	DR34*	507+25	RT	ASPH	COMM	90-00	6.5	9	65	784.6	116.8	36.5	87.2	7.4	14.5	57.6	2.6	1.9		33.8	27
52	DR35	508+20	LT	ASPH	COMM	90-00	10	12	31.2	849.4	97.2	46	94.4	5.9	15.7	45.9	2.1	1.5		51.9	68
52	DR36*	508+95	RT	CONC	COMM	90-00	6.5	4.7	22	255.2	55.1		28.4		4.7					28.4	
52	DR37*	509+56	RT	ASPH	COMM	90-00	6.5	4.8	26.9	309.8	72.4	8	34.4	1.9	5.7	15.1	0.7	0.5		20.4	10
53	DR38 ✠	512+07	RT	ASPH	COMM	90-00	17	4	9.7	232.6	34.5		25.8	0.6	4.3	4.5	0.2	0.1		21.7	8
53	DR39	513+52	RT	ASPH	COMM	90-00	11	2	11.3	182.5	21.3		20.3	0.3	3.4	2.7	0.1	0.1		17.8	
53	DR40	515+63	RT	ASPH	COMM	90-00	11.5	0	24	313.6	38.1		34.8		5.8					34.8	
53	DR41	516+30	RT	ASPH	COMM	90-00	11.5	0	11.7	176.6	20.8		19.6		3.3					19.6	
54	DR42	518+52	LT	PAVER	COMM	90-00	13.75	0	20.5	346	39.9		38.4		6.4					38.4	
55	DR43*	522+58	RT	ASPH	COMM	90-00	17.5	0	11.9	257.5	24.6		28.6		4.8					28.6	
55	DR44*	524+81	LT	ASPH	COMM	90-00	15.5	0	22.9	405.2	21.2		45.0		7.5					45.0	
50	DR45**	55+23	LT	ASPH	COMM	90-00	5.7	0	30.8	168.5	21.0		18.7		3.1					18.7	
TOTALS CARRIED TO GENERAL SUMMARY											2211	190	1734	61	304	464	20	15	143#	1152#	242

NOTES

INSTALL LONGITUDINAL AND TRANSVERSE JOINTS IN ACCORDANCE WITH SCD'S BP-2.1, BP-2.2, BP-2.5, AND BP-6.1.

JOINTS: IMPRESSED JOINTS FOR PORTLAND CEMENT CONCRETE DRIVEWAYS SHALL BE ¼" MINIMUM WIDTH BY 3"± DEPTH.

IMPRESSED JOINTS WITHOUT TIE BARS SHALL BE PLACED IN PORTLAND CEMENT CONCRETE DRIVEWAYS BEYOND THE FLARE APRON AT INTERVALS MATCHING EXISTING JOINT SPACING AND NOT TO EXCEED 10'.

SEE GENERAL NOTES FOR CURB, TYPE 6, AS PER PLAN

* REFER TO DETAIL D ON SHEET 41 FOR DRIVE APPROACH AND SIDEWALK WITH NO CURB LAWN

** STATIONING AND OFFSET IN REFERENCE TO CEDAR STREET ALIGNMENT

✠ DRIVEWAY IS RIGHT-TURN EXIT ONLY. DO NOT CONSTRUCT FLARED EDGE ON LEFT.

SEE NOTE REGARDING MAINTENANCE OF DRIVEWAYS IN THE MAINTENANCE OF TRAFFIC NOTES. ITEM 452 - 6" AND/OR 8" NON-REINFORCED CONCRETE PAVEMENT, CLASS QC MS SHALL BE USED IN PLACE OF CLASS QC IP WHEN HIGH EARLY STRENGHT CONCRETE IS REQUIRED. THE FOLLOWING QUANTITIES WILL BE CARRIED TO THE GENERAL SUMMARY:

ITEM 452 - 6" NON-REINFORCED CONCRETE PAVEMENT, CLASS QC IP	100 SY
ITEM 452 - 6" NON-REINFORCED CONCRETE PAVEMENT, CLASS QC MS	43 SY
ITEM 452 - 8" NON-REINFORCED CONCRETE PAVEMENT, CLASS QC IP	806 SY
ITEM 452 - 8" NON-REINFORCED CONCRETE PAVEMENT, CLASS QC MS	346 SY

ITEM 452 - 6" NON-REINFORCED CONCRETE, CLASS QC MS SHALL BE USED FOR DR7

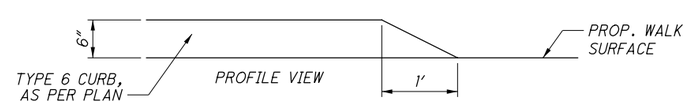

1 TYPE 6 CURB TAPER BEHIND SIDEWALK

THE WORK SHOWN IN THIS DETAIL SHALL BE PAID FOR UNDER ITEM 609 - CURB, TYPE 6, AS PER PLAN. THIS WORK SHALL BE PERFORMED AT ALL DRIVEWAYS THAT HAVE PROPOSED CURB BEHIND BACK OF WALK.

CALCULATED SLG
CHECKED JDH

DRIVEWAY DETAILS

MIA-41-09.49

S:\CIN\4300-4399\4354\004\Drawings\CAD\108662\roadway\sheets\08662GD001.dgn Sheet 2/2/2022 11:36:30 AM Allisonw

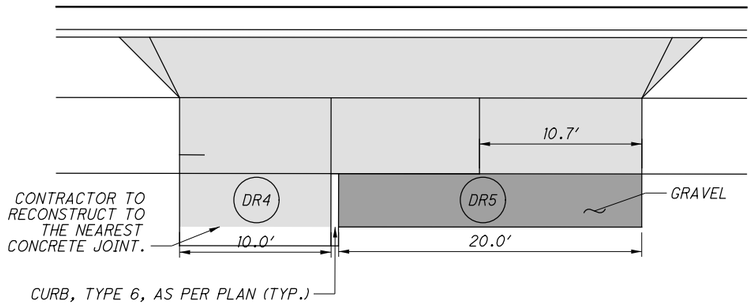

DR4 AND DR5 DETAIL

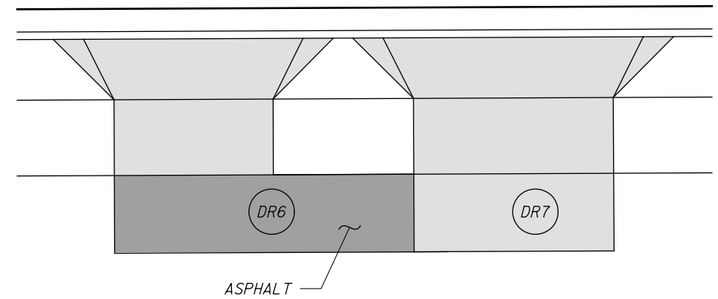

DR6 AND DR7 DETAIL
(SEE SHEET 116 FOR DRIVEWAY DIMENSIONS)

LEGEND

CONCRETE

MATERIAL VARIES
(SEE LABEL ON EACH DETAIL)

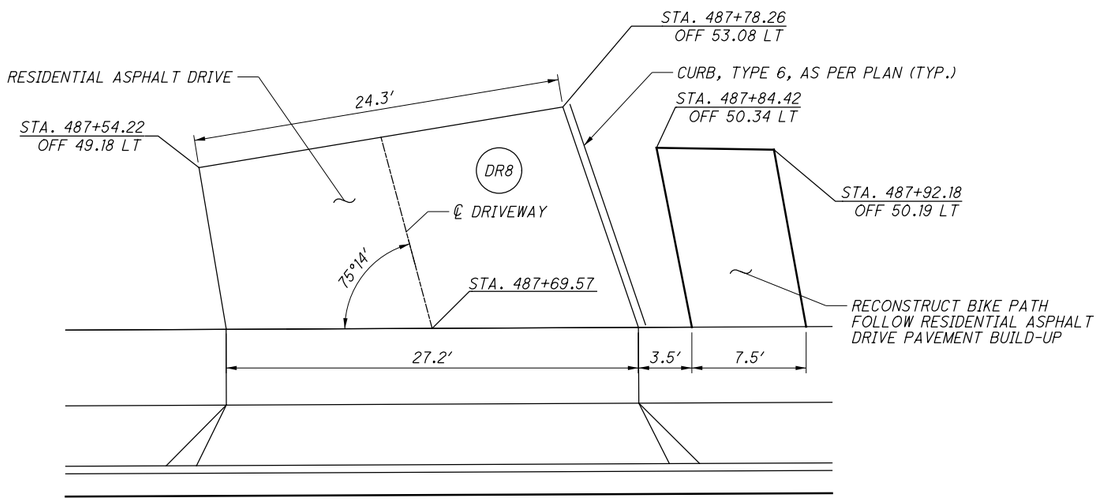

DR8 DETAIL

TOTALS CARRIED TO GENERAL SUMMARY FOR BIKE PATH RECONSTRUCTION:

PAVEMENT REMOVED:	10.3 SY
SUBGRADE COMPACTION:	10.0 SY
AGGREGATE BASE:	1.7 CY
ASPHALT CONCRETE BASE, PG 64-22	1.3 CY
TACK COAT:	1.2 GAL
ASPHALT CONCRETE SURFACE COURSE, TYPE 1, (448), (DRIVEWAYS):	0.3 CY

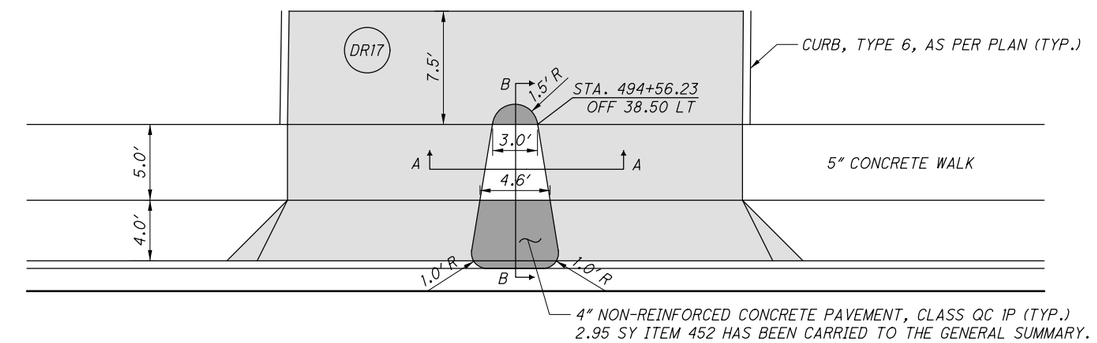

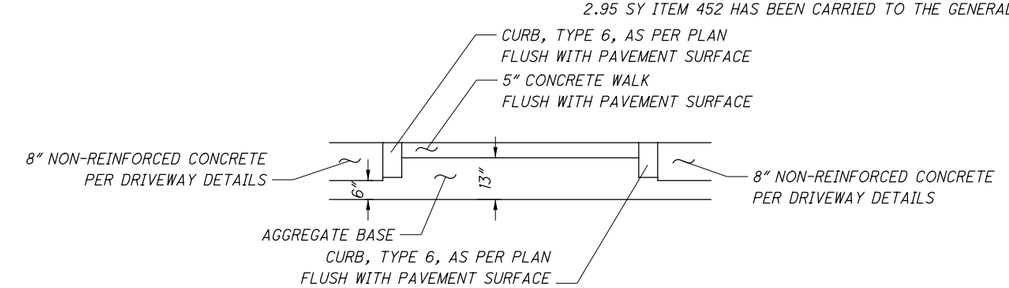

A-A PEDESTRIAN CUT-THRU AREA CROSS SECTION

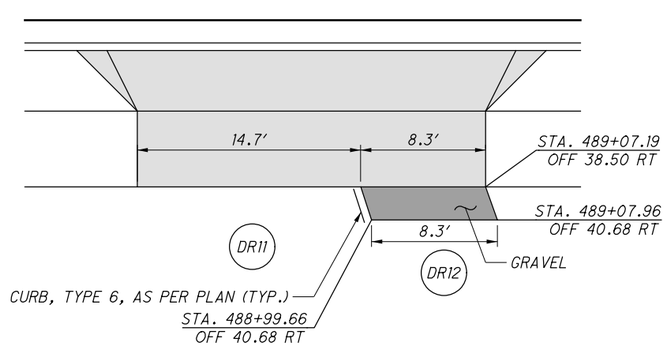

DR11 AND DR12 DETAIL

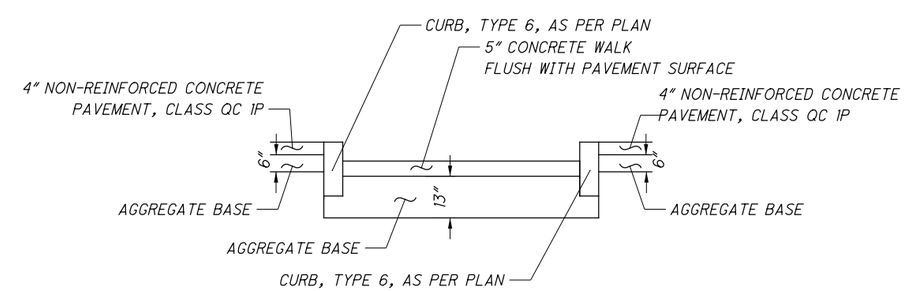

B-B PEDESTRIAN CUT-THRU AREA CROSS SECTION

DR17 DETAIL

CALCULATED ATW
CHECKED JDH

DRIVEWAY DETAILS

MIA-41-09.49

S:\CIN\4300--4399\4354\004\Drawings\CAD\108662\roadway\sheets\08662GD002.dgn Sheet 2/2/2022 11:36:31 AM Allisonw

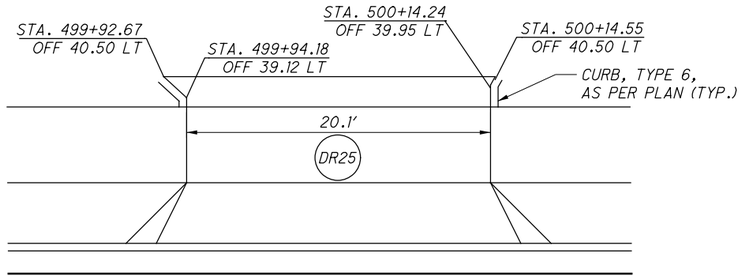

DR25 DETAIL

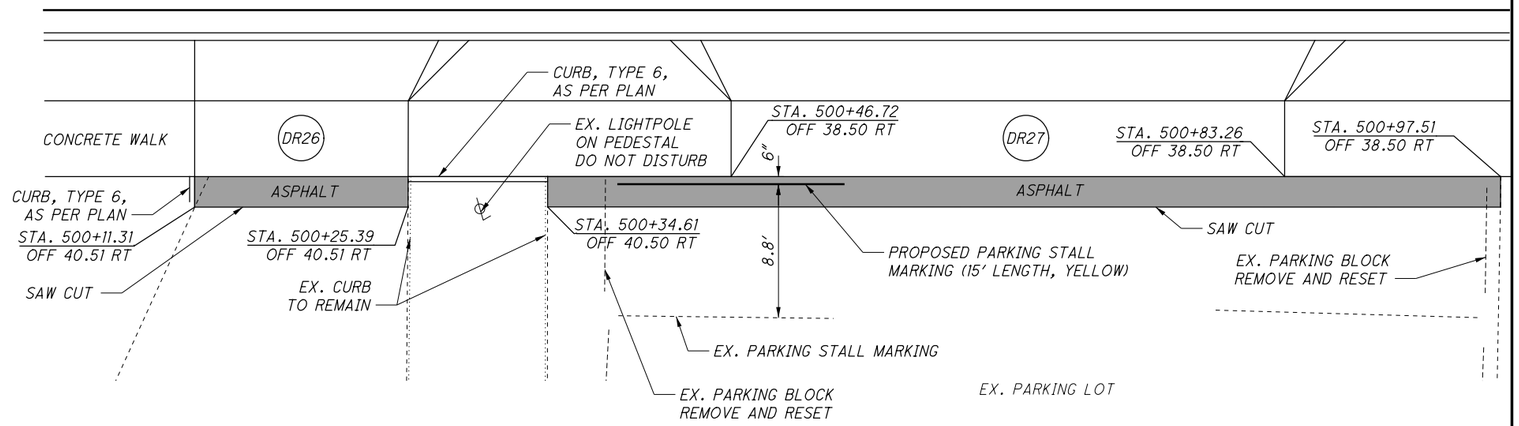

DR26 AND DR27 DETAIL

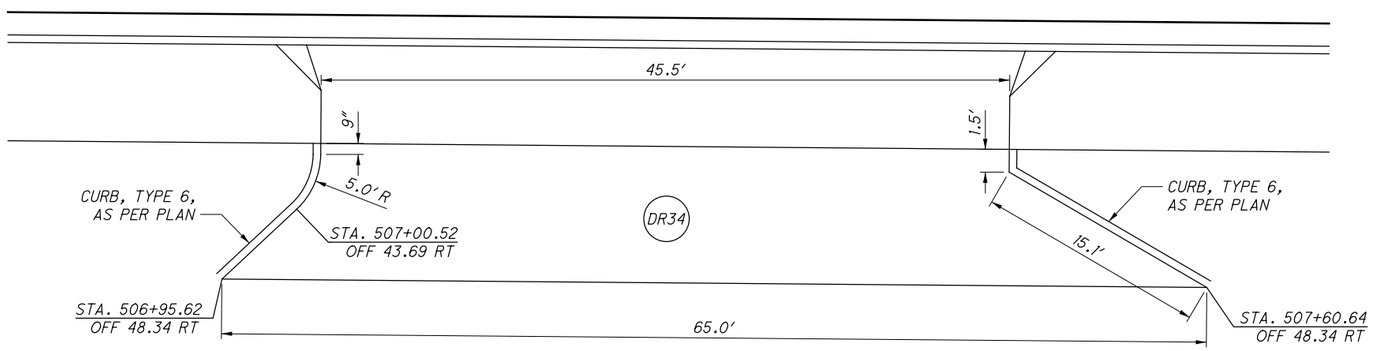

DR34 DETAIL

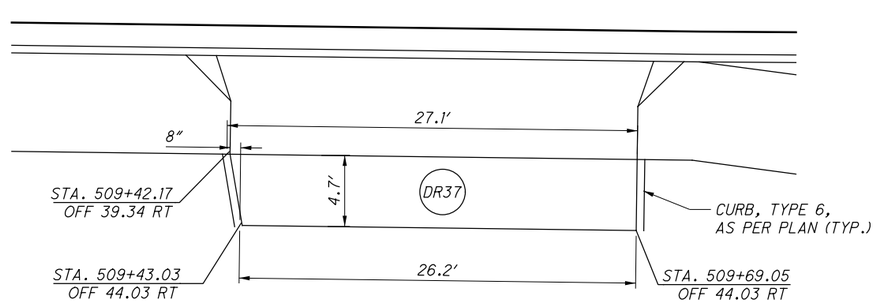

DR37 DETAIL

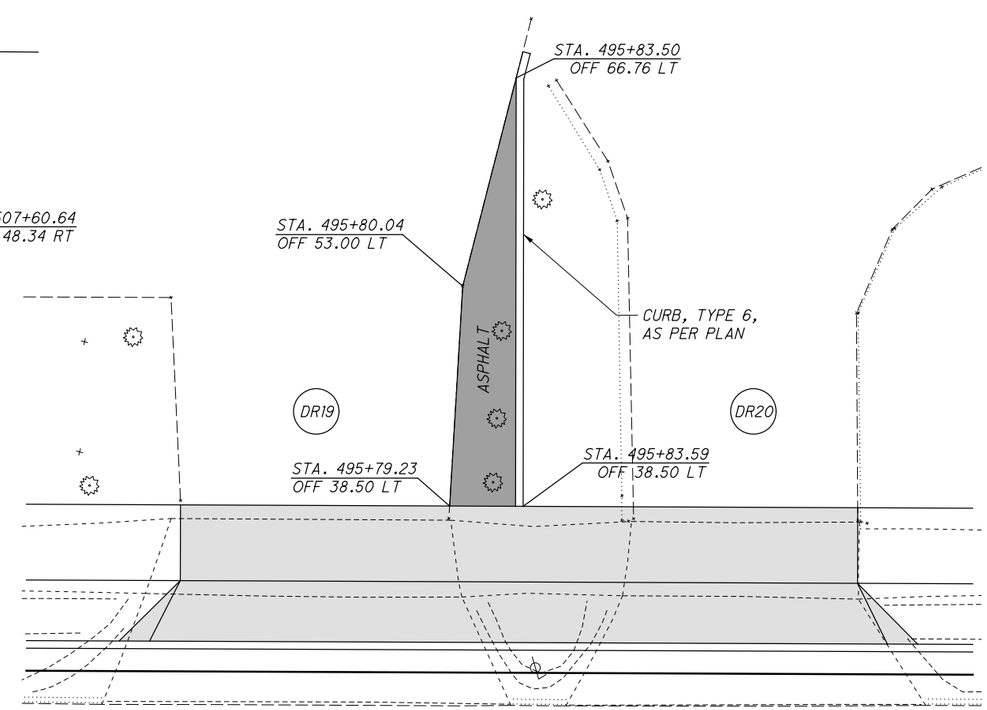

DR19 & DR20 DETAIL

LEGEND

CONCRETE

MATERIAL VARIES
(SEE LABEL ON EACH DETAIL)

CALCULATED ATW
CHECKED JDH

DRIVEWAY DETAILS

MIA-41-09.49

S:\CIN\4300--4399\4354\004\Drawings\CAD\108662\roadway\sheets\08662GD003.dgn Sheet 2/2/2022 11:36:32 AM Allisonw

STRUCTURE QUANTITIES

REFERENCE NO.	STATION	SIDE	SHEET NO.	611 CATCH BASIN, NO. 3, AS PER PLAN	611 CATCH BASIN, NO. 3, AS PER PLAN (CB-3 MODIFIED)	611 CATCH BASIN NO. 6	611 MANHOLE, NO. 3	895 MANUFACTURED WATER QUALITY STRUCTURE, TYPE 4, AS PER PLAN
				EACH	EACH	EACH	EACH	EACH
D101	481+67	RT	47	1				
D102	481+68	RT	47				1	
D103	481+78	LT	47				1	
D104	482+40	LT	47				1	
D105	482+39	LT	47	1				
D106	483+03	LT	47	1				
D107	483+15	LT	47				1	
D108	483+36	LT	47				1	
D109	483+36	RT	47	1				
D110	483+43	RT	47				1	
D111	484+24	LT	47	1				
D112	484+32	LT	47				1	
D113	NOT USED							
D114	486+50	LT	47				1	
D115	486+50	RT	47	1				
D201	487+14	LT	48				1	
D202	487+14	LT	48	1				
D203	NOT USED							
D204	489+90	LT	48	1				
D205	489+95	LT	48				1	
D206	489+86	RT	48				1	
D207	490+02	RT	48	1				
D208	490+35	LT	48				1	
D209	491+24	LT	48				1	
D301	493+09	LT	49				1	
D302	NOT USED							
D303	495+00	RT	49				1	
D304	494+90	LT	49				1	
D305	495+05	LT	49	1				
D306	496+37	LT	49				1	
D307	496+43	RT	49				1	
D308	494+18	RT	49	1				
D309	496+90	LT	49	1				
D310	495+04	RT	49	1				
D401	497+55	RT	50	1				
D402	498+80	RT	50	1				
D403	498+95	RT	50	1				
D404	499+47	RT	50	1				
D405	499+59	LT	50		1			
D406	498+92	RT	50				1	
D407	501+64	LT	50				1	
D408	500+37	RT	50	1				
D501	503+75	RT	51				1	
D502	502+68	LT	51	1				
D503	503+44	RT	51	1				
D504	502+96	LT	51			1		
D505	503+56	LT	51				1	
D506	503+39	LT	51	1				
D507	503+79	LT	51				1	
D508	503+94	LT	51			1		
D509	503+98	LT	51				1	
D510	504+19	RT	51				1	
D511	504+06	RT	51			1		
SUBTOTAL				21	1	3	25	0

STRUCTURE QUANTITIES

REFERENCE NO.	STATION	SIDE	SHEET NO.	611 CATCH BASIN, NO. 3, AS PER PLAN	611 CATCH BASIN, NO. 3, AS PER PLAN (CB-3 MODIFIED)	611 CATCH BASIN NO. 6	611 MANHOLE, NO. 3	895 MANUFACTURED WATER QUALITY STRUCTURE, TYPE 4, AS PER PLAN
				EACH	EACH	EACH	EACH	EACH
D512	504+62	RT	51	1				
D513	504+83	RT	51	1				
D514	504+44	LT	51				1	
D515	505+10	LT	51	1				
D516	505+10	LT	51				1	
D517	505+67	LT	51	1				
D518	505+68	LT	51				1	
D519	506+13	RT	51	1				
D520	506+79	LT	51				1	
D521	506+79	LT	51	1				
D601	508+72	LT	52				1	
D602	510+01	LT	52				1	
D603	510+03	LT	52	1				
D604	509+78	RT	52				1	
D605	510+05	RT	52	1				
D606	510+96	LT	52				1	
D607	511+01	LT	52	1				
D608	511+31	LT	52	1				
D609	511+56	LT	52				1	
D610	511+93	LT	52		1			
D611	508+72	LT	52	1				
D701	512+30	RT	53	1				
D702	514+56	LT	53				1	
D703	515+02	LT	53	1				
D704	514+88	RT	53				1	
D705	515+00	RT	53	1				
D706	515+02	LT	53				1	
D801	517+54	LT	54				1	
D802	518+09	LT	54		1			
D803	518+22	RT	54	1				
D804	519+90	LT	54		1			
D805	519+90	RT	54	1				
D806	520+27	LT	54	1				
D807	520+62	LT	54	1				
D808	521+00	RT	54	1				
D809	521+16	LT	54	1				
D810	520+26	LT	54	1				
D811	520+62	LT	54	1				
D901	522+59	RT	55			1		
D902	523+06	RT	55				1	
D903	522+83	LT	55	1				
D904	523+84	RT	55				1	
D905	524+11	RT	55	1				
D906	524+08	LT	55	1				
D907	524+63	LT	55			1		
D908	525+22	LT	55	1				
D909	526+26	LT	55	1				
MS-1	517+08	LT	54					1
SUBTOTAL				27	3	2	15	1
TOTALS CARRIED TO GENERAL SUMMARY				48	4	5	40	1

CALCULATED CJR
CHECKED JCH

DRAINAGE SUBSUMMARY

MIA-41-09.49

S:\CIN\4300-4399\4354\004\Drawings\CAD\108662\drainage\sheets\08662DS001.dgn Sheet 2/2/2022 11:36:32 AM Allisonw

CONDUIT QUANTITIES

SHEET NO.	605	611								
	6" BASE PIPE UNDERDRAINS	12" CONDUIT, TYPE B	12" CONDUIT, TYPE B, AS PER PLAN	15" CONDUIT, TYPE B	18" CONDUIT, TYPE B	24" CONDUIT, TYPE B	30" CONDUIT, TYPE B	36" CONDUIT, TYPE B	42" CONDUIT, TYPE B	48" CONDUIT, TYPE B
	FT	FT	FT	FT	FT	FT	FT	FT	FT	FT
121		101	16	23	60			881	131	
122		200	127	235	92	145	181			
123		585	90	167	131		106			
124		54	35		37	534	586	475		38
125		348			69					
126		259	262	293	125					
481+40 TO 487+00	1207									
487+00 TO 492+00	1025									
492+00 TO 497+00	916									
497+00 TO 502+00	1087									
502+00 TO 507+00	1372									
507+00 TO 512+00	1777									
512+00 TO 517+00	1010									
517+00 TO 522+00	1124									
522+00 TO 527+00	920									
527+00 TO 529+39	126									
TOTALS CARRIED TO GENERAL SUMMARY	10,564	1,547	530	718	514	679	873	1,356	131	38

CALCULATED CJR
CHECKED JCH

DRAINAGE SUBSUMMARY

MIA-41-09.49

S:\CIN\4300--4399\4354\004\Drawings\CAD\108662\drainage\sheets\08662DS002.dgn Sheet 2/2/2022 11:36:51 AM Allisonw

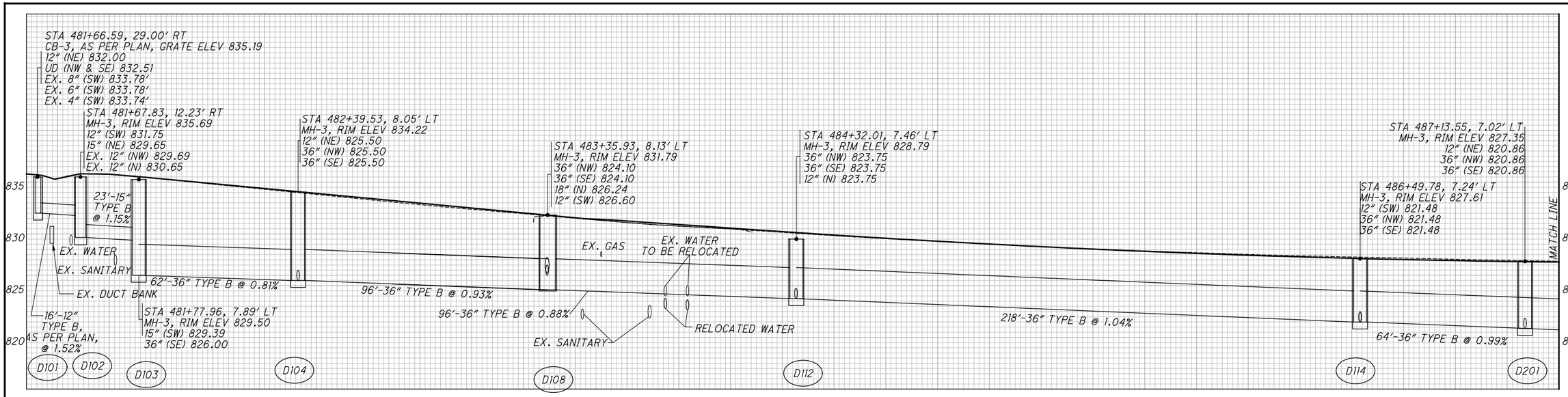

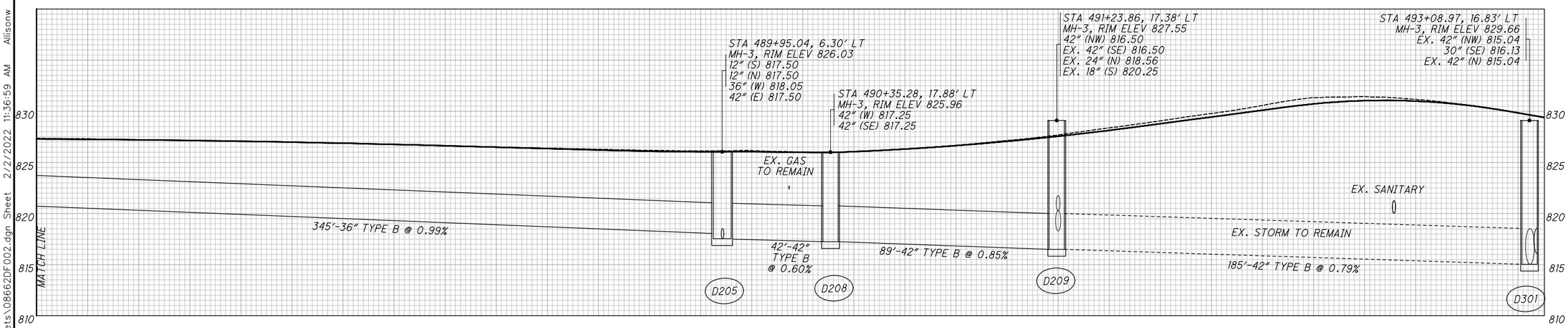

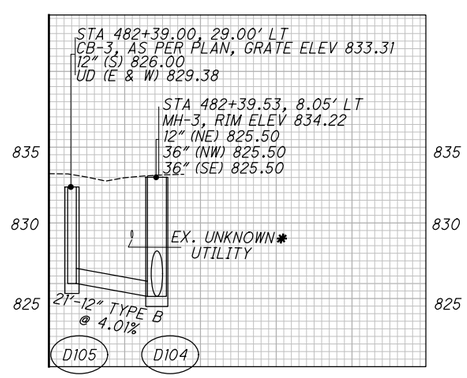

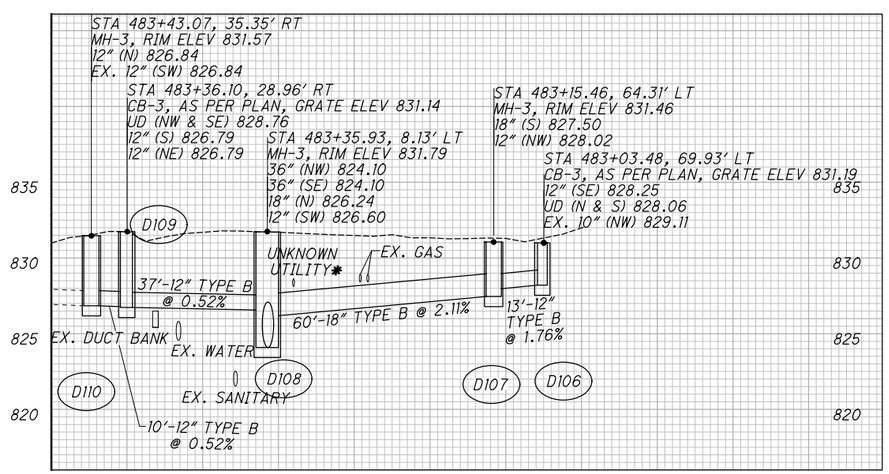

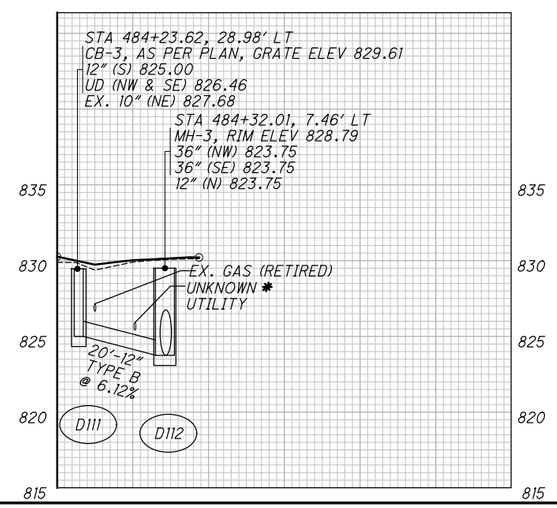

* UNKNOWN UTILITY WAS DETECTED USING QL-B METHODS. CONTRACTOR SHALL VERIFY UTILITY DEPTH AND IF ACTIVE. IF CONTRACTOR DETERMINES A CONFLICT WITH AN ACTIVE LINE, THE CONTRACTOR SHALL NOTIFY THE OWNER AND ENGINEER IMMEDIATELY.

CALCULATED MET
CHECKED JDH

STORM SEWER PROFILES

MIA-41-09.49

S:\CIN\4300--4399\4354\004\Drawings\CAD\108662\drainage\sheets\08662DF002.dgn Sheet 2/2/2022 11:36:59 AM Allisonw

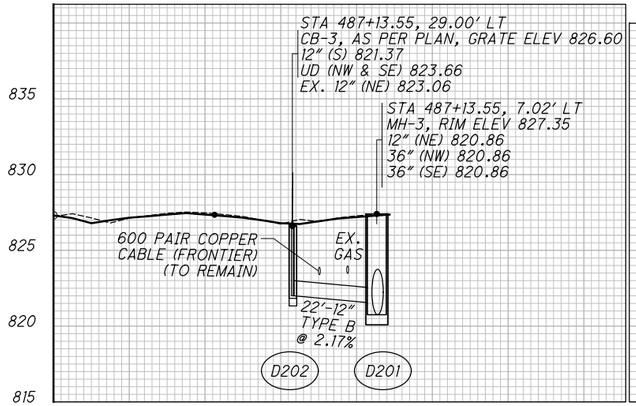

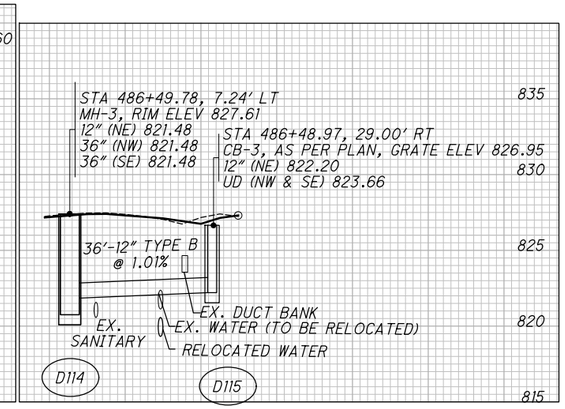

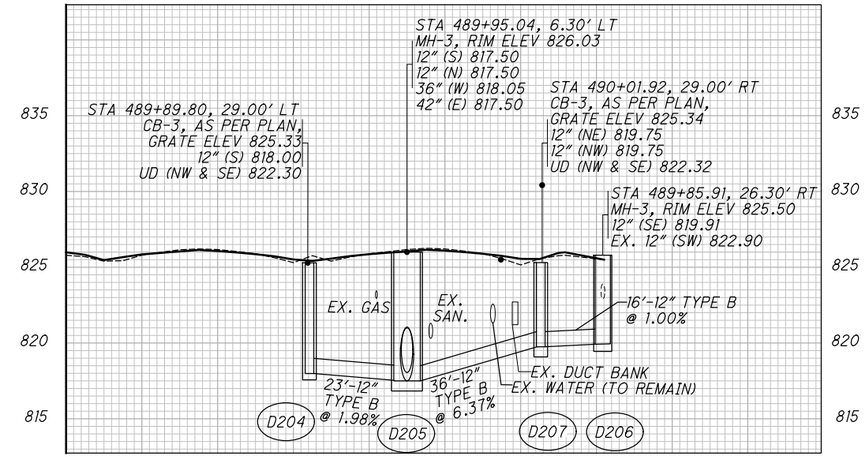

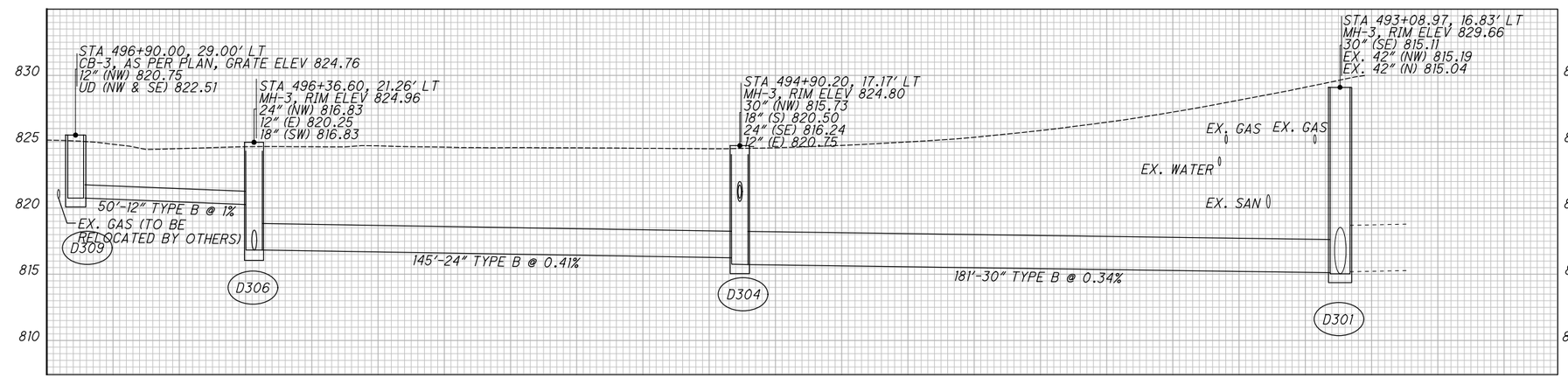

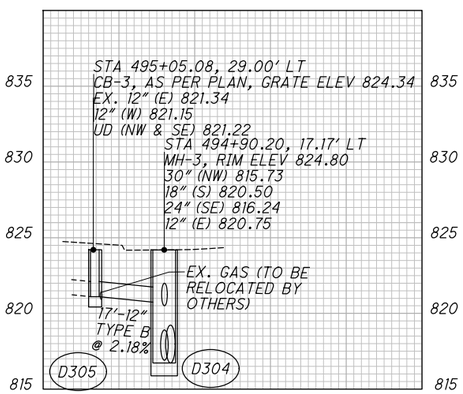

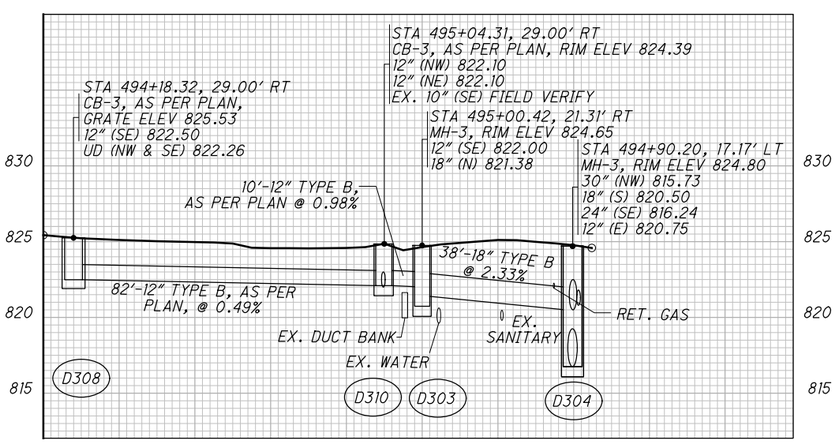

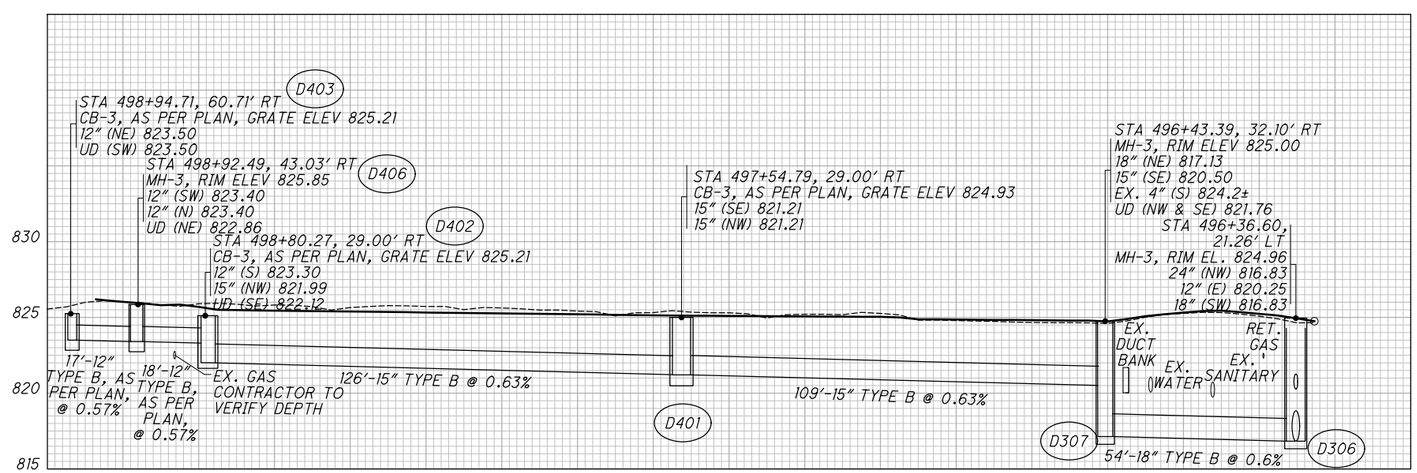

CALCULATED MET
CHECKED JDH

STORM SEWER PROFILES

MIA-41-09.49

S:\CIN\4300--4399\4354\004\Drawings\CAD\108662\drainage\sheets\08662DF003.dgn Sheet 2/2/2022 11:37:00 AM Allisonw

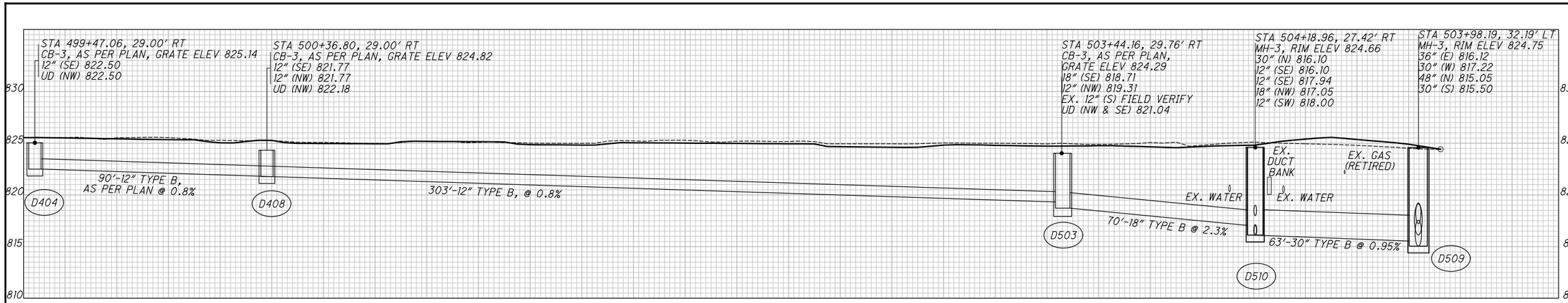

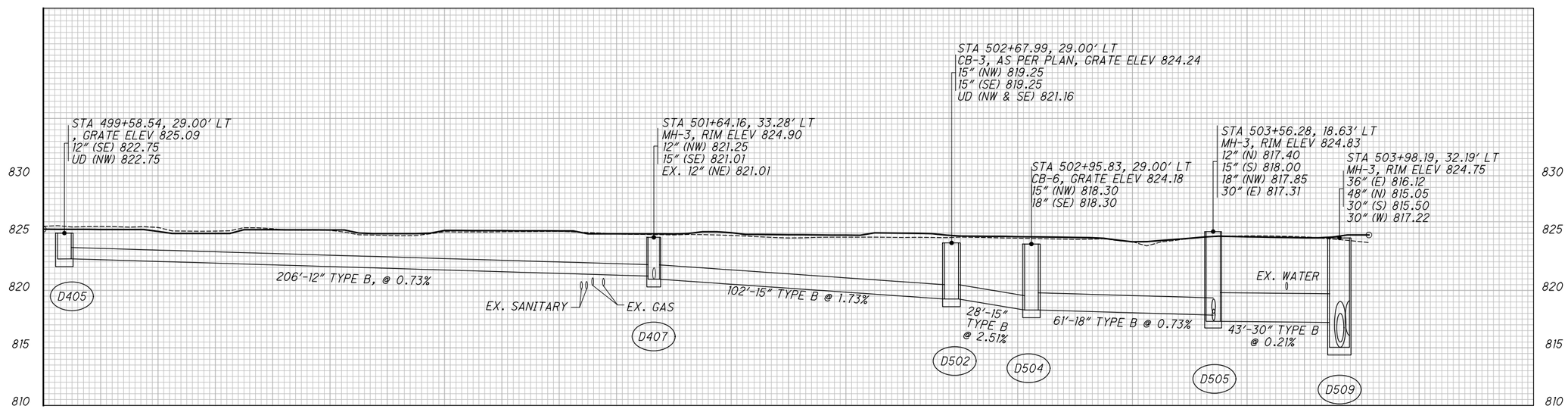

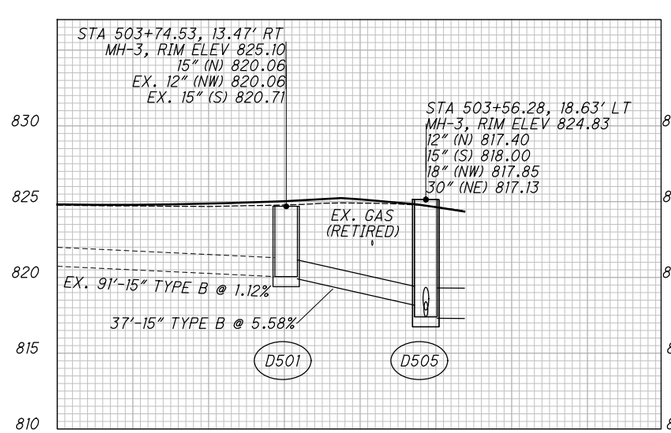

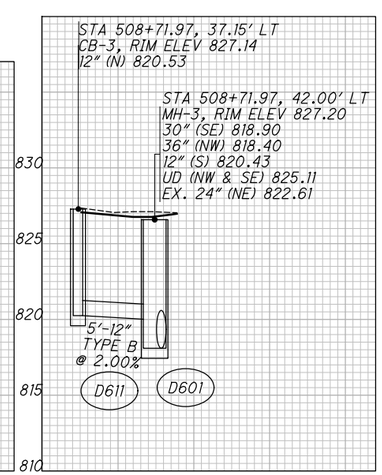

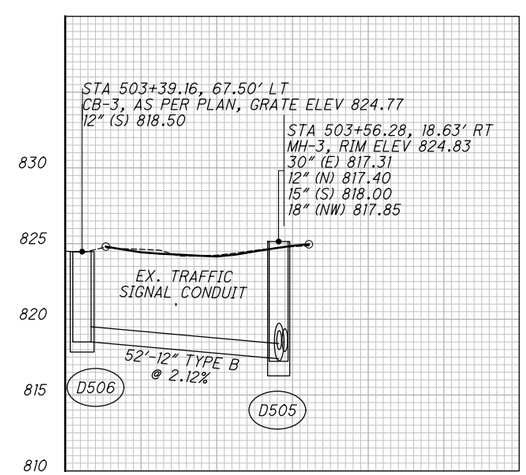

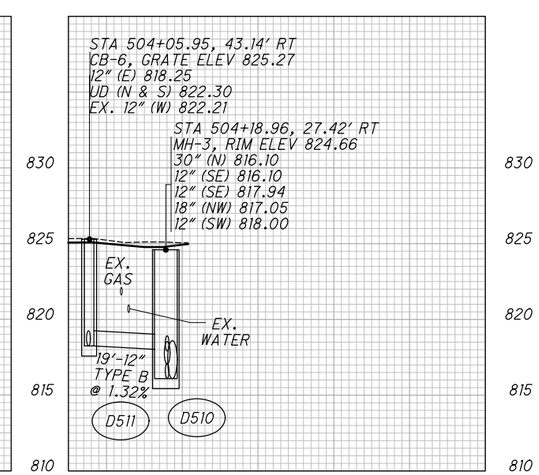

CALCULATED MET
CHECKED JDH

STORM SEWER PROFILES

MIA-41-09.49

S:\CIN\4300--4399\4354\004\Drawings\CAD\108662\drainage\sheets\08662DF004.dgn Sheet 2/2/2022 11:37:01 AM Allisonw

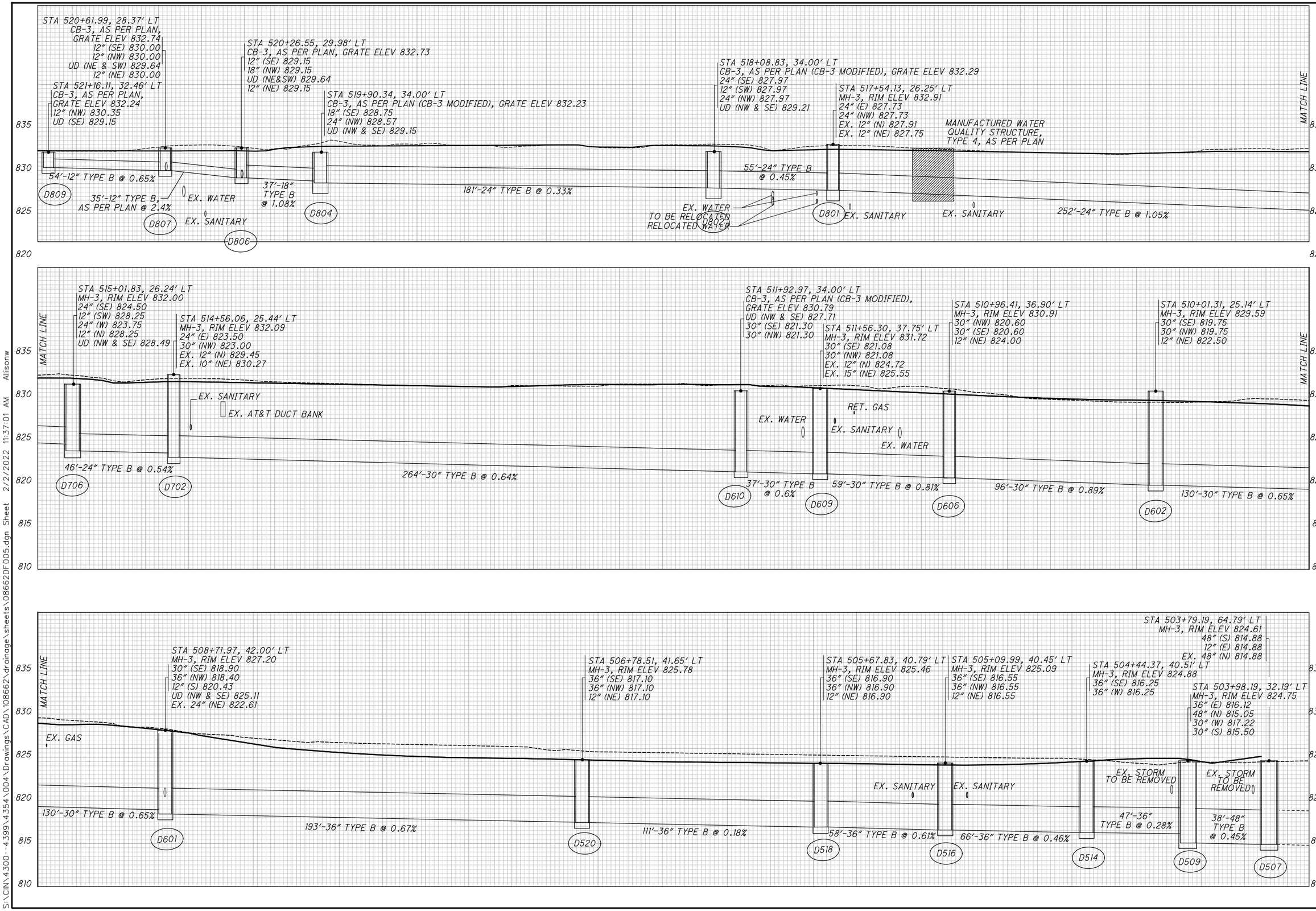

CALCULATED MET
CHECKED JDH

STORM SEWER PROFILES

MIA-41-09.49

S:\CIN\4300-4399\4354\004\Drawings\CAD\108662\drainage\sheets\08662DF005.dgn Sheet 2/2/2022 11:37:01 AM Allisonw

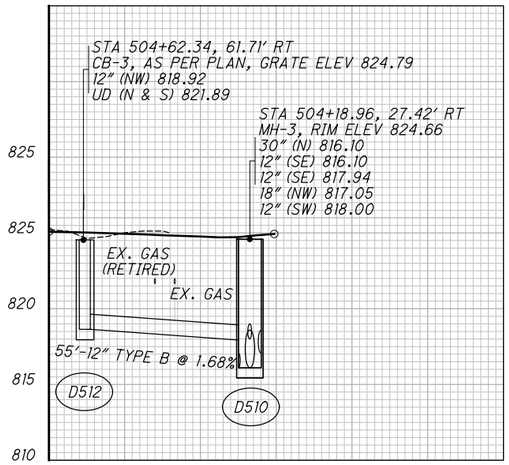

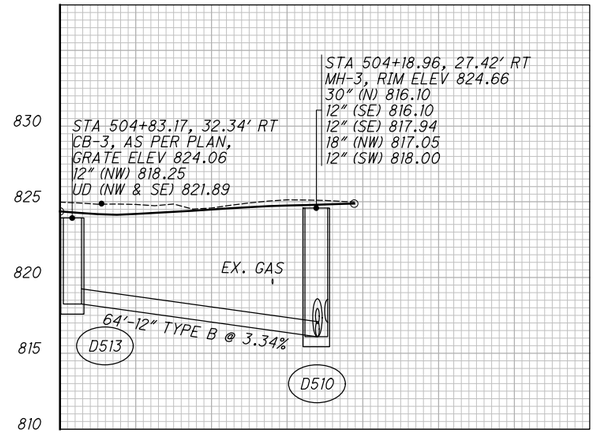

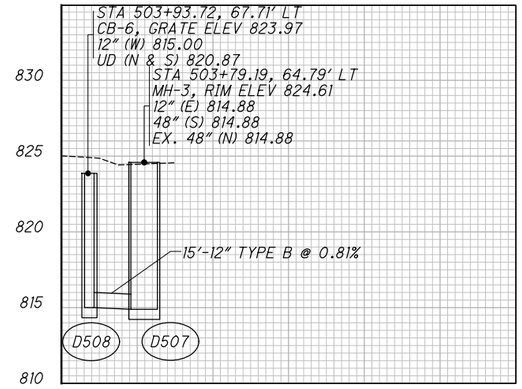

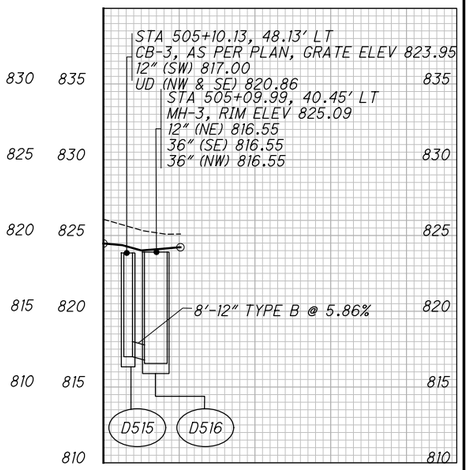

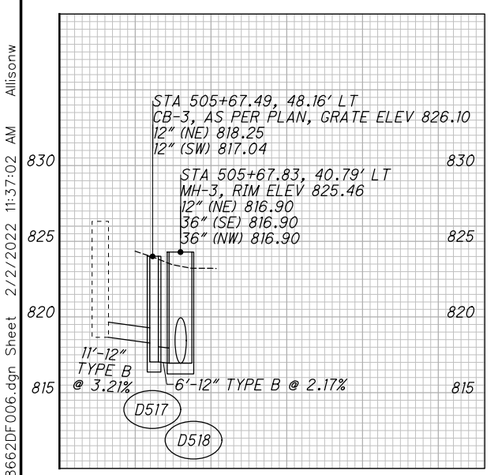

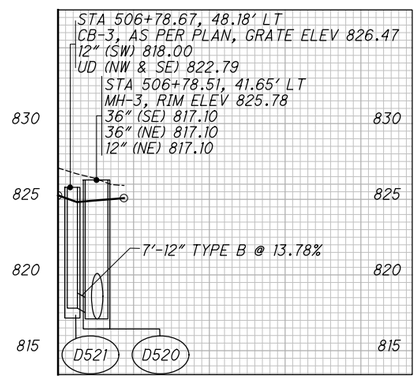

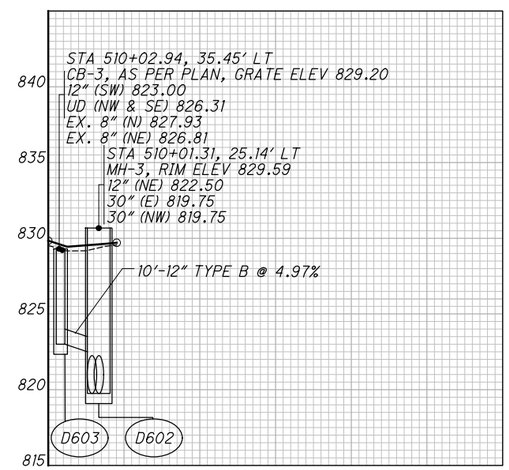

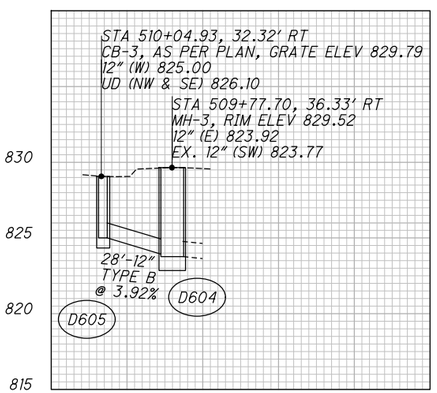

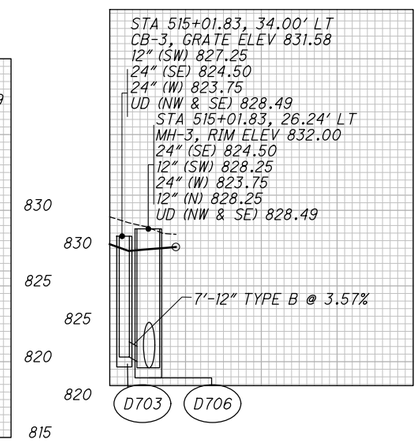

* UNKNOWN UTILITY WAS DETECTED USING QL-B METHODS. CONTRACTOR SHALL VERIFY UTILITY DEPTH AND IF ACTIVE. IF CONTRACTOR DETERMINES A CONFLICT WITH AN ACTIVE LINE, THE CONTRACTOR SHALL NOTIFY THE OWNER AND ENGINEER IMMEDIATELY.

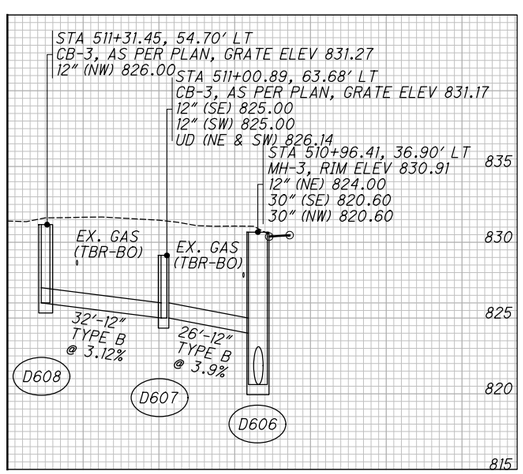

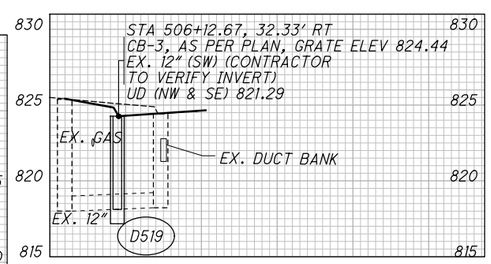

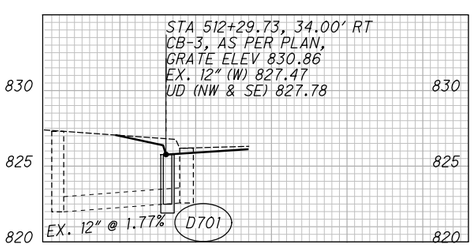

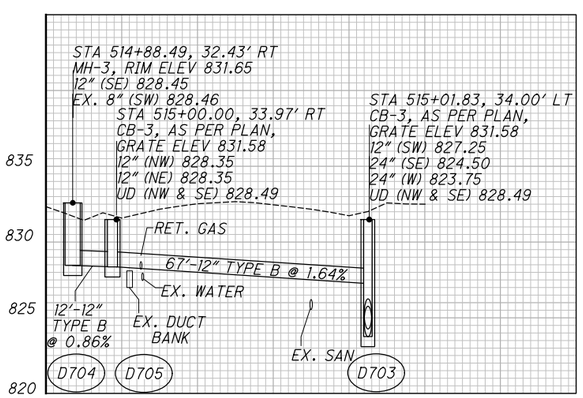

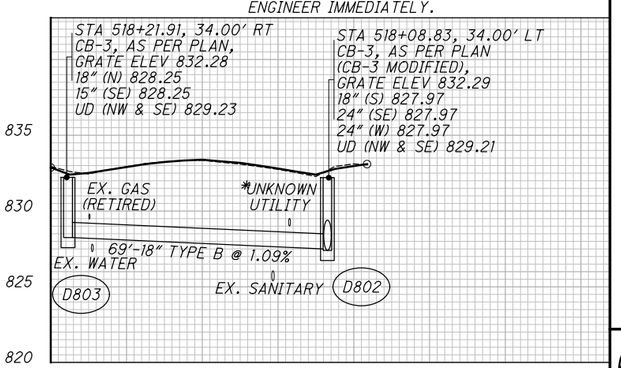

CALCULATED MET
CHECKED JDH

STORM SEWER PROFILES

MIA-41-09.49

S:\CIN\4300--4399\4354\004\Drawings\CAD\108662\drainage\sheets\08662DF006.dgn Sheet 2/2/2022 11:37:02 AM Allisonw

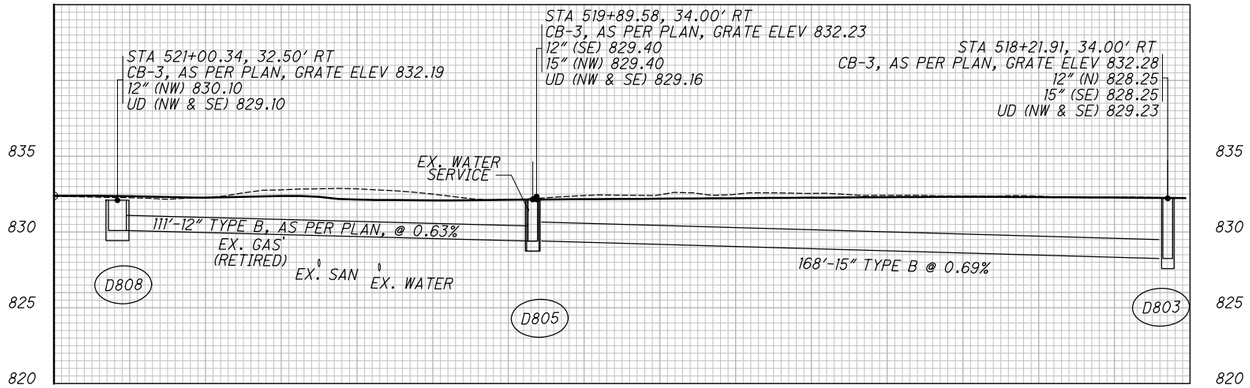

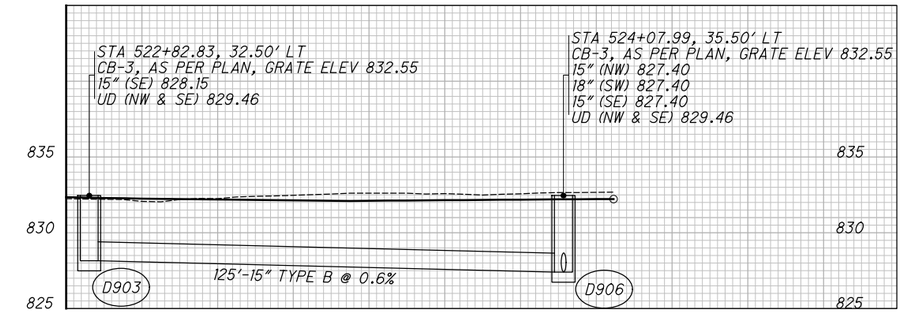

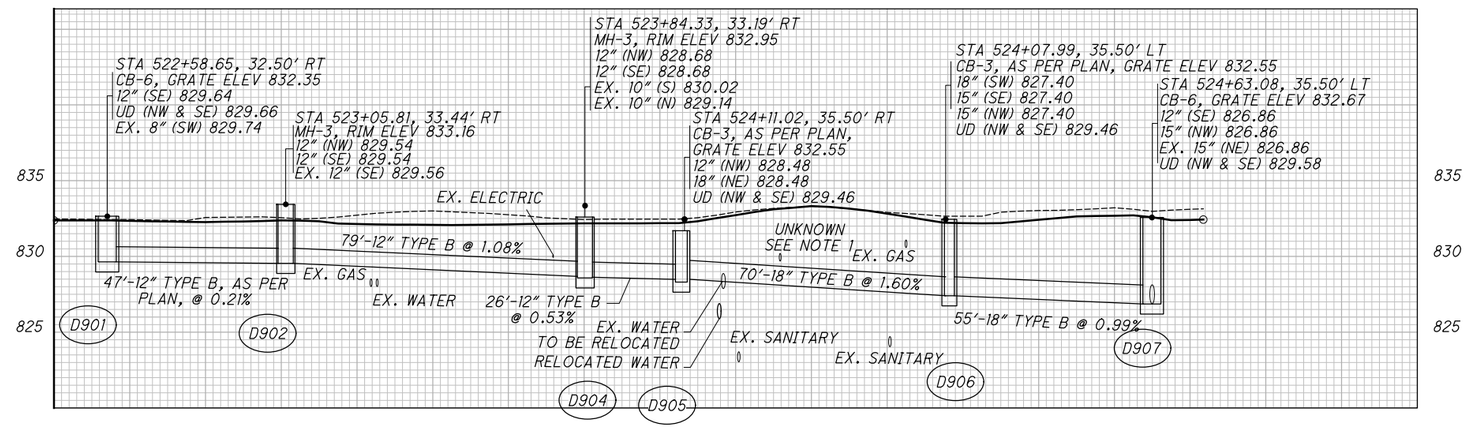

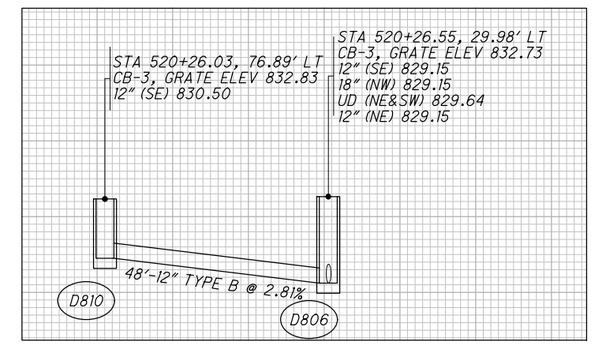

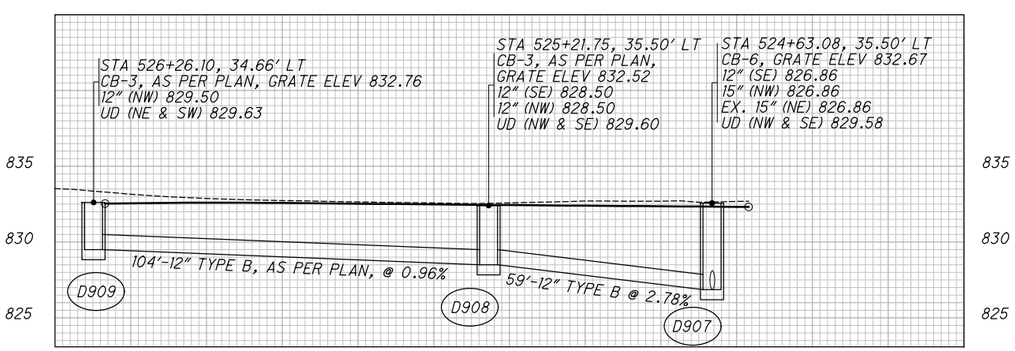

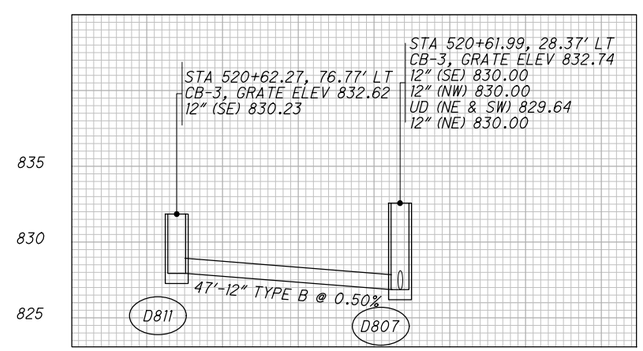

NOTE 1 CONTRACTOR TO VERIFY UNKNOWN UTILITY LOCATIONS AND DEPTHS MINIMUM OF 3 WEEKS PRIOR TO WORK IN THIS AREA. CONTRACTOR TO IDENTIFY UTILITY OWNER AND WHETHER THE UTILITY IS ACTIVE OR NOT. NOTIFY ENGINEER OF RESULTS IMMEDIATELY. IF INACTIVE, STORM CAN BE SHALLOWER TO AVOID WATER RELOCATION AT THE DIRECTION OF THE ENGINEER.

CALCULATED CJR
CHECKED JDH

STORM SEWER PROFILES

MIA-41-09.49

S:\CIN\4300--4399\4354\004\Drawings\CAD\108662\drainage\sheets\08662DF007.dgn Sheet 2/2/2022 11:37:02 AM Allisonw

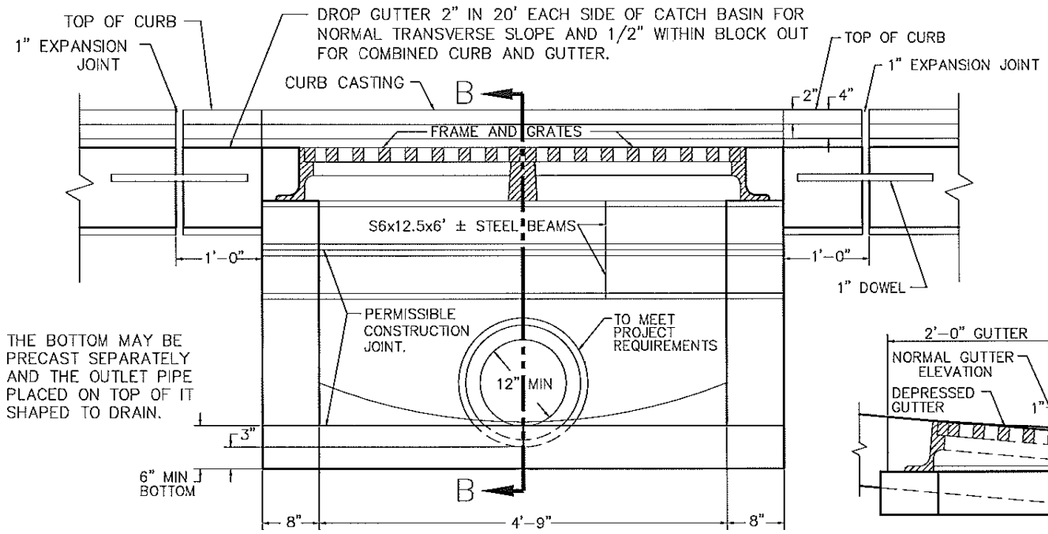

SECTION A–A

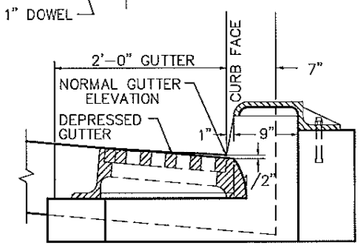

SECTION B–B
WITH CURB & GUTTER

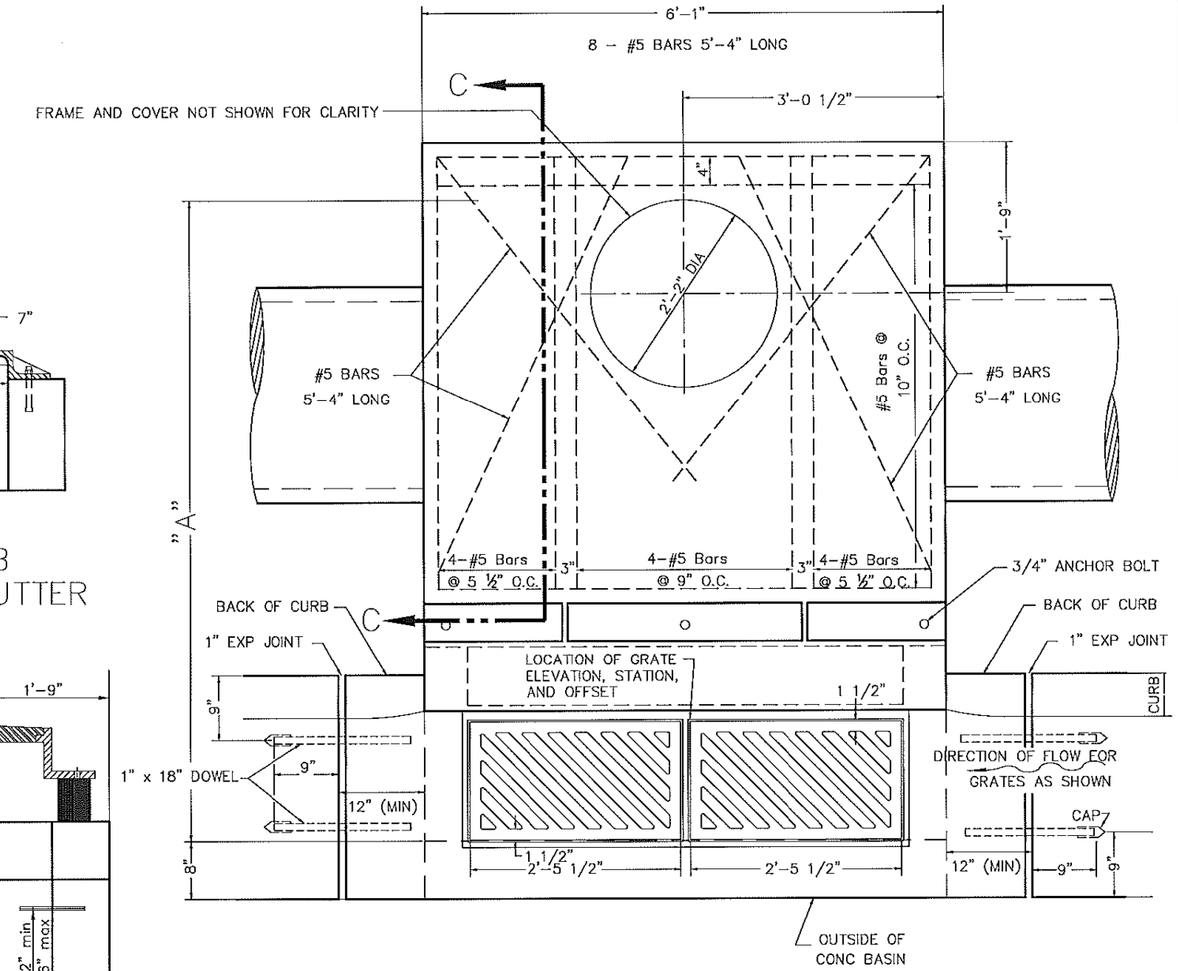

PLAN OF CATCH BASIN
AND PAVEMENT JOINTS

* DOWEL LOCATION FOR CURB AND GUTTER

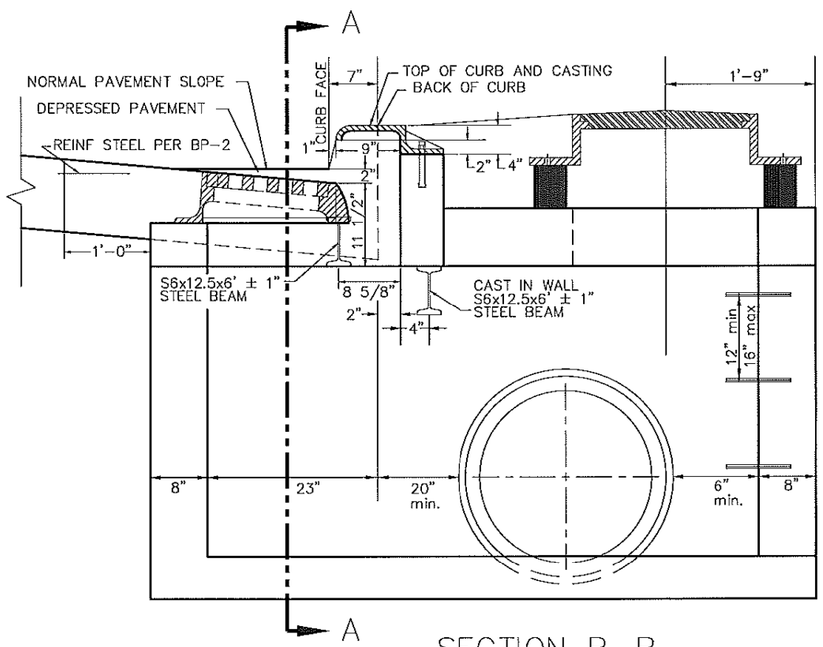

SECTION B–B

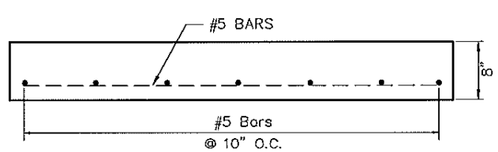

SLAB DETAIL SECTION C–C

PIPE SIZE	dim. "A"
12" – 21"	80"
24" – 27"	89"
30" – 36"	99"

CATCH BASIN
NO. 3
MODIFIED

NOTES

GRATES: Two required. For details, see **SCD CB-2.2.** Grate "V" shall be provided unless the plans specifically require the diagonal grate. If the diagonal grate is specified, it shall be placed so that the diagonal bars direct drainage flow toward the curb.

CASTINGS: The design shall be essentially the same and equally as strong as shown.
Minimum weight (mass):

Curb Casting . . . . . 305 lbs. [138 kg]
Two Grates . . . . . 254 lbs. [115 kg],
Frame . . . . . 590 lbs. [267 kg], and
Two Grate "V" . . . . 210 lbs. [95 kg].

Lighter weight frames and grates that meet the requirements of CMS 711.14 may also be provided. Grate openings and dimensions shall not differ from those shown, unless otherwise shown in the plans.

The following text shall be cast into the top of the curb casting:

"DUMP NO WASTE" and **"DRAINS TO WATERWAY"**

Text shall be printed in bold, capital letters with a minimum height of ¾". See example on Plan & Section. "WATERWAY" may be substituted with "STREAM", "RIVER", "LAKE", etc. Actual placement and logo may vary per manufacturer.

BEARING AREAS: The frame and grate shall be so fitted and finished as to provide a firm and even seat. No projections shall exist on bearing areas and the grate shall seat in its frame without rocking.

WALLS: When used in place of concrete, brick side walls shall be 8" [200] nominal thickness.

PRECAST CONSTRUCTION: Permitted, except for the apron. Concrete shall meet requirements of CMS 706.13. Precast walls shall have a minimum thickness of 6" [150] and reinforcing shall be sufficient to permit shipping and placement without damage. The wall thickness reduction shall be from the outside.

MINIMUM DEPTH: The minimum depth is per the cover requirements for that pipe type.

OPENINGS: Any pipe openings greater than 4" [100] from the outside of the pipe to the structure require the Engineer's approval. Fill all voids per CMS 604.

DOWELS: Four 1"x18" [25x450] dowels are required for concrete pavement or gutter blockout. See **SCD BP-2.2** for dowel details.

BLOCKOUT: Blockouts shall be paved with Class C concrete in PCC pavement or gutter, and paid for as part of the pavement or gutter with no deduction in pavement, curb or gutter quantities because of the castings. A Class C concrete apron, the size of the 2'-0" [600] gutter blockout, shall be cast-in-place in asphalt pavement (no dowels required) with the cost included in the catch basin bid price. No deduction to be made in curb quantities.

PAYMENT: All materials and labor, including excavation and backfilling, shall be paid for under **Item 604 - Catch Basin, No. 3 Modified.**

REINFORCING STEEL: All reinforcing steel shall have 2" clear cover unless otherwise noted.

STEPS: SHALL BE PROVIDED WHERE THE DEPTH EXCEEDS 48" AND SHALL MEET THE REQUIREMENTS OF DRAWING MH-1.

CALCULATED CJR
CHECKED JCH

CATCH BASIN DETAIL

MIA-41-09.49

S:\CIN\4300--4399\4354\004\Drawings\CAD\108662\drainage\sheets\08662DD001.dgn Sheet 2/2/2022 11:37:03 AM Allisonw

NOTES

A. NO WORK SHALL BE APPROVED OR ACCEPTED BY THE CITY UNLESS 2 WORKING DAYS NOTICE OF COMMENCING WORK IS GIVEN TO THE CITY.

B. ROOF DRAINS, FOUNDATION DRAINS, SUMP PUMPS, AND ALL OTHER CLEAR WATER CONNECTIONS TO THE SANITARY SEWER SYSTEM ARE PROHIBITED.

C. WHEN A SEWER IS TO BE EXTENDED AT THE DOWNSTREAM MANHOLE OR FIRST MANHOLE IN THE NEW LINE, IT SHALL BE PLUGGED BEFORE CONSTRUCTION BEGINS. IF THE SEWER IS SMALLER OR EQUAL TO 12" DIAMETER, IT SHALL BE PLUGGED BY PLACING A POLY-ETHELYNE BAG APPROXIMATELY 6" INTO THE SEWER PIPE. SIZES LARGER THAN 12" WILL BE PLUGGED BY OTHER APPROVED METHODS. NO PLUGS SHALL BE REMOVED UNTIL CONSTRUCTION IS COMPLETED AND SOIL IS STABILIZED AND THEN ONLY AS DIRECTED BY THE CITY.

D. WHEN A NEW CASTING OR OTHER PUBLIC PROPERTY IS ABANDONED IT REMAINS CITY PROPERTY, UNLESS OTHERWISE DIRECTED.

E. NEW SEWERS OR ANY SEWER THAT IS RELOCATED OR RESIZED MUST HAVE EPA PLAN APPROVAL PRIOR TO CONSTRUCTION.

F. THE ENDS OF ALL SERVICE LINES OR TEES SHALL BE ACCURATELY LOCATED, MAPPED, AND GIVEN TO THE CITY WITHIN 15 DAYS OF INSTALLATION.

G. IN THE DEMOLITION OF AN EXISTING BUILDING, ALL ABANDONED SEWER LATERALS SHALL BE COORDINATED WITH THE CITY AND CAPPED AT THE OWNER'S EXPENSE.

PIPE

A. ALL MAINLINE PIPE AND SPECIALS SHALL BE PVC SDR-35 UNLESS OTHERWISE APPROVED BY THE CITY. MINIMUM DIAMETER OF PIPE SHALL BE 8".

B. DUCTILE IRON PIPE WILL BE USED IN STREAM CROSSINGS AND WHERE MAXIMUM SEPARATION CANNOT BE MAINTAINED OR WHEN DEPTH OF SEWER EXCEEDS 25 FEET.

C. ALL JOINTS SHALL BE OF THE BELL AND SPIGOT TYPE, THE BELLS BEING FORMED INTEGRALLY WITH THE PIPE. THE BELL SHALL CONTAIN A FACTORY INSTALLED ELASTOMETRIC GASKET IN ACCORDANCE WITH ASTM D3212 OR ANSI A21.11/AWWA C111 AND IS POSITIVELY RETAINED. NO SOLVENT CEMENT JOINTS WILL BE PERMITTED IN FIELD CONSTRUCTION EXCEPT AS SPECIFICALLY AUTHORIZED BY THE CITY.

FLEXIBLE PIPES	MATERIAL SPECIFICATIONS	ACCEPTABLE DEPTH TO INVERT
POLYVINYL CHLORIDE	ASTM D-3034	SDR-35(≤15FT) SDR-26(>15FT)
DUCTILE IRON	ANSI A-21.51 & AWWA C-151	ALL

1. SDR = OUTSIDE DIAMETER DIVIDED BY WALL THICKNESS.

2. THE SPECIFICATIONS ABOVE SHALL BE THOSE MOST RECENTLY ADOPTED BY THE APPROPRIATE STANDARDS SETTING ORGANIZATIONS.

D. LOCATOR WIRE SHALL BE REQUIRED TO BE INSTALLED ON FORCEMAIN SANITARY SEWERS.

EXCAVATION AND PIPE LAYING

A. THE LAYING OF THE PIPE SHALL COMMENCE AT THE LOWEST POINT, WITH THE BELL END LAID UPGRADE. THE PIPE SHALL BE CENTERED IN THE TRENCH AND ALL PIPE SHALL BE LAID WITH ENDS ABUTTING AND TRUE TO LINE AND GRADE.

B. LASER SHALL BE USED INSIDE THE PIPE WHENEVER POSSIBLE UNLESS OTHERWISE APPROVED.

TESTING - ALL PHASES PERFORMED BY CONTRACTOR OR DEVELOPER

A. BEFORE ANY SEWER LINE IS PLACED INTO SERVICE OR ACCEPTED BY THE CITY, IT SHALL BE SUBJECTED TO AND PASS LOW PRESSURE AIR TEST. EACH RUN BETWEEN MANHOLES, WITH ALL SERVICE LATERALS STUBBED INTO PROPERTY LINES, SHALL BE TESTED BEFORE BEING ACCEPTED. THE CONTRACTOR OR DEVELOPER SHALL FURNISH ALL EQUIPMENT AND MATERIAL NECESSARY TO CONDUCT THIS TEST. THE TRENCH SHALL BE COMPLETELY BACKFILLED BEFORE TESTING.

B. SEE SANITARY TESTING REQUIREMENTS ON NEXT SHEET.

C. BEFORE FINAL ACCEPTANCE BY THE CITY AND BEFORE ANY SERVICE LINE IS PUT INTO USE, ALL SANITARY SEWERS AND MANHOLES SHALL BE THOROUGHLY CLEANED OF ALL FOREIGN MATTER BY USE OF A SEWER-JET OR EQUAL, TYPE OF EQUIPMENT BY THE CONTRACTOR. SEWER-JET PROCEDURE MUST BE PERFORMED BEFORE CONTRACTOR T.V. TESTS THE PIPE.

D. THE CITY WILL NOT PASS OR ACCEPT THE SANITARY SEWER FOR FINAL PAYMENT WITHOUT HAVING A PASSING VIDEO AND LOG OF THE SANITARY SEWER TELEVISING FOLLOWING THE STANDARDS PREVIOUSLY DESCRIBED.

E. ALL TELEVISING WORK SHALL BE AT THE CONTRACTOR'S EXPENSE.

F. THE CITY RESERVES THE RIGHT TO A FINAL RE-TELEVISING AT THE CONTRACTOR'S EXPENSE IF DEFICIENCIES ARE NOTED ON THE INITIAL TELEVISING WORK AND AFTER THE CONTRACTOR MAKES THE NECESSARY REPAIRS.

CITY OF TROY	MISCELLANEOUS SANITARY SEWER NOTES 1	REVISIONS: OCT 2018	DATE APPROVED: NOV 2017
ChoiceOne Engineering			PAGE No. 900-1

TESTING REQUIREMENTS

ALL SEWER LINES ARE TO BE FLUSHED AND CLEANED OUT PRIOR TO TESTING

LOW PRESSURE AIR TEST

A. AFTER BACKFILLING, THE AIR TEST SHALL BE CONDUCTED BETWEEN TWO CONSECUTIVE MANHOLES. ALL PIPE OUTLETS MUST BE PLUGGED IN THE SECTION BEING TESTED WITH SUITABLE TEST PLUGS. ONE OF THE PLUGS USED AT A MANHOLE MUST BE TAPPED AND EQUIPPED FOR AN AIR INLET CONNECTION FOR FILLING THE LINE FROM THE AIR COMPRESSOR. AIR SHALL BE SUPPLIED SLOWLY TO THE TEST SECTION UNTIL THE INTERNAL PRESSURE REACHES APPROXIMATELY 4 PSI. IF THE PIPE IS BELOW EXISTING GROUNDWATER LEVEL, THE INTERNAL PRESSURE SHALL BE INCREASED BY THE AVERAGE BACK PRESSURE OF ANY GROUNDWATER THAT MAY BE OVER THE PIPE, BUT IN NO CASE SHOULD THE INTERNAL PRESSURE EVER EXCEED 5 PSI.

B. AT LEAST 2 MINUTES SHALL BE ALLOWED FOR THE AIR PRESSURE TO STABILIZE. WHEN THE PRESSURE HAS STABILIZED AND IS AT OR ABOVE 3.5 PSI, THE AIR SUPPLY SHALL BE DISCONNECTED AND TIMING SHALL BEGIN WITH A STOP WATCH. THE STOP WATCH SHALL BE ALLOWED TO RUN UNTIL THE PRESSURE HAS DROPPED 1.0 PSI. IF THE TIME SHOWN ON THE STOP WATCH IS GREATER THAN THE SPECIFIED MINIMUM TIME, THE SECTION SHALL BE CONSIDERED TO HAVE PASSED THE TEST. TIME MAY BE INTERPOLATED FROM THE FIGURES LISTED BELOW.

PIPE DIA. (IN.)	Time for Longer Length (sec)	Specified Minimum for Length (L) Shown (min:sec)						
		100 FT.	150 FT.	200 FT.	250 FT.	300 FT.	350 FT.	400 FT.
4	0.380L	3:46	3:46	3:46	3:46	3:46	3:46	3:46
6	0.854L	5:40	5:40	5:40	5:40	5:40	5:40	5:42
8	1.520L	7:34	7:34	7:34	7:34	7:36	8:52	10:08
10	2.374L	9:26	9:26	9:26	9:53	11:52	13:51	15:49
12	3.418L	11:20	11:20	11:24	14:15	17:05	19:56	22:47
15	5.342L	14:10	14:10	17:48	22:15	26:42	31:09	35:36
18	7.692L	17:00	19:13	25:38	32:03	38:27	44:52	51:16
21	10.470L	19:50	26:10	34:54	43:37	52:21	61:00	69:48
24	13.674L	22:47	34:11	45:34	56:58	68:22	79:46	91:10

SPECIFICATION TIME FOR LENGTH (L) SHOWN (MIN:SEC)

*ALL TESTS SHALL BE WITNESSED BY A CITY OF TROY ENGINEERING DEPARTMENT REPRESENTATIVE.

DEFLECTION TEST

A. DEFLECTION TESTS SHALL BE PERFORMED BY THE CONTRACTOR ON ALL FLEXIBLE PIPE. THE TEST SHALL BE CONDUCTED AFTER THE FINAL BACKFILL HAS BEEN IN PLACE AT LEAST 30 DAYS TO PERMIT STABILIZATION OF THE SOIL-PIPE SYSTEM.

B. NO PIPE SHALL EXCEED A DEFLECTION OF 5%. IF DEFLECTION EXCEEDS 5%, REPLACEMENT OR CORRECTION SHALL BE ACCOMPLISHED IN ACCORDANCE WITH THE REQUIREMENTS OF APPROVING AGENCY.

C. THE RIGID BALL OR MANDREL USED FOR THE DEFLECTION TEST SHALL HAVE A DIAMETER NOT LESS THAN 95% OF THE BASE INSIDE DIAMETER OR AVERAGE INSIDE DIAMETER OF THE PIPE DEPENDING ON WHICH IS MANUFACTURED. THE PIPE SHALL BE MEASURED IN COMPLIANCE WITH ASTM D-2122 STANDARD TEST METHOD OF DETERMINING DIMENSIONS OF THERMOPLASTIC PIPE AND FITTINGS. THE TEST SHALL BE PERFORMED WITHOUT MECHANICAL PULLING DEVICES.

MANHOLE VACUUM TEST

ALL SANITARY SEWER MANHOLES SHALL BE VACUUM TESTED BY THE CONTRACTOR USING THE FOLLOWING PROCEDURES FROM ASTM C-1244.

A. PREPARATION OF THE MANHOLE

1. ALL LIFT HOLES SHALL BE PLUGGED.

2. ALL PIPES ENTERING THE MANHOLE SHALL BE TEMPORARILY PLUGGED TAKING CARE TO SECURELY BRACE THE PIPES AND PLUGS TO PREVENT THEM FROM BEING DRAWN INTO THE MANHOLE.

B. PROCEDURE

1. THE FIRST HEAD SHALL BE PLACED AT THE TOP OF THE MANHOLE IN THE CASTING IN ACCORDANCE WITH THE MANUFACTURER'S RECOMMENDATIONS.

2. A VACUUM OF 10" OF MERCURY (4.9 PSI) SHALL BE DRAWN ON THE MANHOLE, THE VALVE ON THE VACUUM LINE OF THE TEST HEAD CLOSED, AND THE VACUUM PUMP SHUT OFF. THE TIME SHALL BE MEASURED FOR THE VACUUM TO DROP TO 9" OF MERCURY (4.4 PSI).

3. THE MANHOLE SHALL PASS IF THE TIME FOR THE VACUUM READING TO DROP FROM 10" OF MERCURY (4.9 PSI) TO 9" OF MERCURY (4.4 PSI) MEETS OR EXCEEDS THE VALUES INDICATED ON THE TABLE.

4. IF THE MANHOLE FAILS THE INITIAL TEST, NECESSARY REPAIRS SHALL BE MADE BY AN APPROVED METHOD. THE MANHOLE SHALL THEN BE RETESTED UNTIL A SATISFACTORY TEST IS OBTAINED.

DEPTH (FT.)	DIAMETER, INCHES 48	60	72
	TIME, SECONDS		
8 OR LESS	20	26	33
10	25	33	41
12	30	39	49
14	35	46	57
16	40	52	67
18	45	59	73
20	50	65	81
22	55	72	89
24	59	78	97
26	64	85	105
28	69	91	113
30	74	98	121

MINIMUM TEST TIMES FOR VARIOUS MANHOLE DIAMETERS

CITY OF TROY	MISCELLANEOUS SANITARY SEWER NOTES 2	REVISIONS:	DATE APPROVED: NOV 2017
ChoiceOne Engineering			PAGE No. 900-2

SEWER TELEVISING STANDARDS

A. ALL SEWER TELEVISING CONTRACTORS SHALL BE CERTIFIED BY NASSCO FOR PIPELINE ASSESSMENT AND CERTIFICATION. SANITARY TELEVISING WORK SHALL COMPLY WITH NASSCO STANDARDS.

B. ANY SEWER JETTING OR OTHER CLEANING ASSOCIATED WITH A PASSING RECORDING IS THE RESPONSIBILITY OF THE CONTRACTOR.

C. ALL TELEVISING WORK SHALL BE DONE IN COLOR WITH THE PROPER AMOUNT OF ILLUMINATION TO CLEARLY SHOW THE ENTIRE PIPE DIAMETER.

D. THE CAMERA SHALL BE OF THE PAN AND TILT TYPE.

E. THE TELEVISING CONTRACTOR SHALL USE A CD-ROM OR DATA DVD TO PROVIDE THE ENTIRE RECORDING PROCESS IN EITHER MPEG II OR MPEG IV FORMAT.

F. AT THE START OF THE RECORDING PROCESS, THE VIDEO SHALL RECORD THE FOLLOWING:

a. DATE/TIME
b. OPERATOR AND COMPANY NAME
c. SEWER PROJECT NAME
d. ADDRESS OR INTERSECTION OF MANHOLE WORKING ON
e. DIRECTION ON TELEVISING
f. FOOTAGE COUNTER

G. THE VIDEO MUST SHOW THE COUNTER RECORDING THROUGHOUT THE RECORDING PROCESS.

H. THE VIDEO SHALL SHOW THE CLOCK POSITION AND DISTANCE FROM THE MANHOLE FOR EACH LATERAL. THE CONTRACTOR SHALL ALSO SUPPLY A WRITTEN COPY OF ALL LATERAL LOCATIONS.

I. THE OPERATOR SHALL PAN EACH SEWER JOINT AND NOTE ANY DEFICIENCIES ON THE VIDEO.

J. THE OPERATOR SHALL PAN AND TILT EACH LATERAL AND SHALL POSITION THE CAMERA TO LOOK UP EACH LATERAL CONNECTION.

K. AT NO TIME SHALL THE OPERATOR ALLOW THE CAMERA HEAD TO BE SUBMERGED.

L. THE OPERATOR SHALL NOTE ANY DEFICIENCIES ON THE MAIN SCREEN.

M. THE OPERATOR SHALL KEEP AN ACCURATE LOG CONSISTING OF THE FOLLOWING:

a. DIAGRAM OF SEWER FROM MANHOLE TO MANHOLE SHOWING DIRECTION OF FLOW.
b. SHALL NOTE ALL SEWER LATERALS WITH CLOCK POSITIONS AND DISTANCE FROM MANHOLES.
c. DEFICIENCIES IN THE SEWER PIPE INCLUDING BELLIES.
d. SPECIAL NOTES DESCRIBING AREAS OF CONCERN.
e. ANY DEFICIENCIES NOTED SHALL ACCOMPANY A DIGITAL PHOTO ATTACHED OR INCLUDED IN THE REPORT.

STANDARDS FOR BELLIES/DIPS IN SEWER MAINS

SANITARY SEWERS SHALL BE DECLARED AS "NOT APPROVED" IF BELLIES/DIPS IN THE MAIN LINE EXCEEDS THE FOLLOWING CRITERIA:

PIPE SIZES

SLOPE	8"	10"	12"	15"	18"	21"	24"	>27"
0.10%	2"	2.5"	3"	4"	4"	4"	4.5"	5"
0.12%	2"	2.5"	3"	4"	4"	4"	5"	5"
0.15%	2"	2.5"	3"	3.5"	3.5"	4"	4"	4"
0.22%	2"	2.5"	3"	3"	3.5"	3.5"	3.5"	4"
0.28%	2"	2"	2"	2"	2.5"	2.5"	3"	3"
0.40%	2"	2"	2"	2"	2"	2.5"	2.5"	2.5"
0.60%	1"	1"	1"	1"	1"	1"	1"	1"
1.00%	0"	0"	0"	0"	0"	0"	0"	0"

MAXIMUM ALLOWABLE BELLIES IN PIPE (INCHES)

SEWER TELEVISING PROCEDURES FOR NEW SEWER CONSTRUCTION

A. THE SANITARY SEWER SHALL BE COMPLETELY CLEAN AND FREE OF DEBRIS USING A HIGH PRESSURE JET RODDER CAPABLE OF SCOURING THE PIPE WALLS.

B. ALL DEBRIS SHALL BE VACUUMED OUT OF THE SEWER MAIN.

C. ONCE CLEANING HAS BEEN COMPLETED, THE CONTRACTOR SHALL RUN CLEAR WATER IN THE NEW SEWER MAIN TO FILL ANY POTENTIAL BELLIES IN THE LINE. THE CONTRACTOR SHALL CALCULATE THE VOLUME GALLON CAPACITY OF THE SEWER MAIN AND SHALL USE THAT MUCH WATER TO FILL POTENTIAL BELLIES/DIPS.

D. THE CONTRACTOR MAY RENT A WATER HYDRANT METER FROM THE CITY TO PERFORM THIS TASK.

E. THE CONTRACTOR SHALL MAKE SURE THAT THERE IS NO FLOW EMANATING UPSTREAM. IF SO, THE CONTRACTOR SHALL STOP THIS FLOW DURING THE TELEVISING.

F. THE CONTRACTOR SHALL TELEVISE THE SEWER FOLLOWING THE TELEVISING STANDARDS.

SEWER TELEVISING PROCEDURES FOR SEWER RECONSTRUCTION PROJECTS

A. BEFORE COMMENCEMENT OF THE CLEANING PROCESS, THE TELEVISING CONTRACTOR SHALL NOTIFY ADJACENT AND AFFECTED PROPERTY OWNERS BY GOING DOOR-TO-DOOR AND NOTIFYING THEM OF THE POSSIBILITY OF SEWER BACKUP DURING THE CLEANING PROCESS.

B. THE SANITARY SEWER SHALL BE COMPLETELY CLEANED AND FREE OF DEBRIS USING A HIGH PRESSURE JET RODDER.

C. ALL DEBRIS SHALL BE VACUUMED OUT OF THE SEWER MAIN.

D. ONCE CLEANING HAS BEEN COMPLETED, THE CONTRACTOR SHALL BAG THE UPSTREAM MANHOLE AND PUMP THE SEWAGE FLOW DOWNSTREAM AND SHALL MAINTAIN PUMPING DURING THE TELEVISING PROCESS. THE CONTRACTOR SHALL BE RESPONSIBLE FOR ANY SEWER FLOODING AS A RESULT OF THEIR ACTIVITIES.

E. AFTER THE PUMP BYPASS HAS BEEN ESTABLISHED, THE CONTRACTOR SHALL RUN CLEAR WATER IN THE RECONSTRUCTED SEWER MAIN TO FILL ANY POTENTIAL BELLIES IN THE LINE. THE CONTRACTOR SHALL CALCULATE THE VOLUME GALLON CAPACITY OF THE SEWER MAIN AND SHALL USE THAT MUCH WATER TO FILL POTENTIAL BELLIES/DIPS.

F. THE CONTRACTOR MAY RENT A WATER HYDRANT METER FROM THE CITY TO PERFORM THIS TASK.

G. THE CONTRACTOR SHALL TELEVISE THE SEWER FOLLOWING THE TELEVISING STANDARDS.

CITY OF TROY	MISCELLANEOUS SANITARY SEWER NOTES 3	REVISIONS:	DATE APPROVED: NOV 2017
ChoiceOne Engineering			PAGE No. 900-3

CALCULATED ATW
CHECKED JDH

SANITARY SEWER NOTES

MIA-41-09.49

S:\CIN\4300--4399\4354\004\Drawings\CAD\108662\roadway\sheets\08662UN001.dgn Sheet 2/2/2022 11:37:35 AM Allisonw

ITEM 611 - MANHOLE, NO. 3, AS PER PLAN

ALL SANITARY SEWER MANHOLES SHALL BE THE TYPE AS SHOWN ON THE DRAWINGS AND PER STANDARD DETAILS PROVIDED IN THE DRAWINGS. WHEN MANHOLES ARE LOCATED WITHIN PAVEMENT, THE UPPERMOST SURFACE OF THE FRAME OR COVER SHALL BE 1/4-IN. BELOW THE PAVEMENT SURFACE. MANHOLES SHALL BE CONSTRUCTED USING A MAXIMUM OF 12-IN. OF ADJUSTING RINGS.

THIS ITEM SHALL INCLUDE ALL LABOR, MATERIALS, AND EQUIPMENT TO INSTALL NEW MANHOLE INCLUDING EXCAVATION, HAUL-OFF AND DISPOSAL OF EXCAVATED MATERIALS, DEWATERING, BYPASS PUMPING, BACKFILL, AND TESTING.

SERVICE LATERAL CONNECTION

A NEW LATERAL CONNECTION TO THE NEW SEWER MAIN SHALL BE PROVIDED CONFORMING TO STANDARD DETAILS PROVIDED IN THE DRAWINGS. AN ESTIMATED QUANTITY OF 50 FT ITEM 611 - 6" CONDUIT, TYPE B, AS PER PLAN HAS BEEN CARRIED TO THE SANITARY SUBSUMMARY ON THIS SHEET FOR THIS WORK.

SANITARY SERVICE CONNECTION SCHEDULE

OWNER	PARCEL ID	EX. SEWER MAIN CONNECTION
FIRST NATIONAL BANK & TRUST COMPANY	D08-006800	CEDAR STREET
HTM AREA CREDIT UNION	D08-005180	CEDAR STREET
GREENVILLE NATIONAL	D08-005320	CEDAR STREET
LA FIESTA, INC.	D08-005300	W MAIN STREET
WENDALIA REALITY LLC	D08-005200	W MAIN STREET

PAVEMENT RESTORATION FOR PIPE INSTALLATIONS AND/OR REMOVALS

SEE SHEET 10.

PAVEMENT RESTORATION FOR DRAINAGE STRUCTURE INSTALLATIONS

SEE SHEET 10.

BYPASS PUMPING REQUIREMENTS

	MIN (GPM)	MAX (GPM)
UPSTREAM OF SAN-1	60	258
UPSTREAM OF SAN-3	0	6
UPSTREAM OF SAN-4	90	394
UPSTREAM OF SAN-5	30	130

ITEM 611 - CONDUIT TYPE B, 707.45

ALL SANITARY SEWER CONDUIT PLACED AS PART OF THIS PROJECT SHALL CONFORM TO ODOT CONSTRUCTION AND MATERIALS SPECIFICATIONS, 2019, ITEM 707.45 AS ASTM D-3034 WITH SDR 35. THE MATERIAL OF CONDUIT SHALL BE SHOWN ON THE SANITARY DRAWINGS. WHERE THE DRAWINGS CALL FOR THE PROPOSED SEWER TO CROSS EXISTING UTILITIES, IT SHALL BE THE RESPONSIBILITY OF THE CONTRACTOR TO LOCATE THE EXISTING UTILITY, BOTH AS TO LINE AND GRADE BEFORE STARTING TO LAY THE PROPOSED CONDUIT FOR POSSIBLE CONFLICTS.

ALL RIGID MATERIAL INCLUDING, BUT NOT LIMITED TO, ASPHALT, CONCRETE, BRICK, CURB, CURB AND GUTTER, DRIVE APPROACHES, STONE, AND SOIL NECESSARY TO BE REMOVED TO OBTAIN THE PROPER ELEVATIONS IS TO BE INCLUDED IN THE UNIT PRICE BID FOR THIS ITEM. PRIOR TO EXCAVATION OF RIGID MATERIAL, THE CONTRACTOR SHALL SAWCUT FULL DEPTH OF MATERIAL TO CREATE A STRAIGHT EDGE FOR NEW MATERIAL CONNECTIONS. WHEN DRAWINGS CALL FOR PLACEMENT OF NEW CONDUIT INTO EXISTING STRUCTURE, CONTRACTOR SHALL CORE EXISTING STRUCTURE USING A CIRCULAR BIT. WHEN CONNECTION OF AN EXISTING PIPE IS NECESSARY, CONTRACTOR SHALL MAKE THE CONNECTION OF THE TWO PIPES WITH A FERNCO COUPLING, OR AN APPROVED EQUAL. CONCRETE AND/OR MORTAR IS NOT AN ACCEPTABLE MANNER TO CONNECT TWO PIPES.

THE BELOW ITEMS SHALL INCLUDE ALL LABOR, MATERIALS, AND EQUIPMENT TO INSTALL NEW SEWER CONDUIT INCLUDING EXCAVATION, HAUL-OFF AND DISPOSAL OF EXCAVATED MATERIALS, DEWATERING, BYPASS PUMPING, BACKFILL, AND TESTING.

ITEM 611 - 6" CONDUIT, TYPE B, AS PER PLAN
ITEM 611 - 10" CONDUIT, TYPE B, AS PER PLAN
ITEM 611 - 12" CONDUIT, TYPE B, AS PER PLAN
ITEM 611 - 15" CONDUIT, TYPE B, AS PER PLAN

ITEM 611 - MANHOLE, MISC.: CONNECT TO EXISTING SAN. MANHOLE

THIS ITEM SHALL INCLUDE ALL LABOR, MATERIALS, AND EQUIPMENT TO INSTALL AND CONNECT NEW SEWER MAIN TO EXISTING MANHOLES INCLUDING EXCAVATION, HAUL-OFF AND DISPOSAL OF EXCAVATED MATERIALS, DEWATERING, BYPASS PUMPING, BACKFILL, AND TESTING.

SANITARY REPLACEMENT AT PENN ROAD

EXISTING SANITARY SEWER ON W. MAIN STREET NEAR THE INTERSECTION OF PENN ROAD CURRENTLY RUNS THROUGH MANHOLE AT STA. 491+30 WHICH IS TO BE REMOVED AS R-24 IN THE PLANS. THE CONTRACTOR IS TO REMOVE THE MANHOLE AS SPECIFIED, REMOVE AND REPLACE THE SANITARY SEWER CONDUIT FOR THE LENGTH SPECIFIED HEREIN. ALL WORK ASSOCIATED WITH SANITARY SEWER AT THIS LOCATED SHALL BE INCLUDED IN THE ITEMS WITHIN THIS NOTE. THE BELOW QUANTITIES HAVE BEEN CARRIED TO THE TABLE ON THIS SHEET FOR THE REPLACEMENT OF THE SANITARY SEWER BEGINNING AT 491+24.

ITEM 202-	PIPE REMOVED, 24" AND UNDER	25 FT
ITEM 611-	12" CONDUIT, TYPE B, AS PER PLAN	25 FT
ITEM 611-	MANHOLE, MISC.: CONNECT TO EXISTING SAN. MANHOLE	1 EA

	611	611	611	611	611	611	202	202
	6" CONDUIT, TYPE B, AS PER PLAN	MANHOLE, NO. 3, AS PER PLAN	MANHOLE, MISC.: CONNECT TO EXISTING SANITARY	10" CONDUIT, TYPE B, AS PER PLAN	12" CONDUIT, TYPE B, AS PER PLAN	15" CONDUIT, TYPE B, AS PER PLAN	MANHOLE REMOVED	PIPE REMOVED, 24" AND UNDER
	FT	EACH	EACH	FT	FT	FT	EACH	FT
TOTALS CARRIED TO GENERAL SUMMARY:	50	1	5	230	303	204	2	737

CALCULATED ATW
CHECKED JDH

SANITARY SEWER NOTES

MIA-41-09.49

S:\CIN\4300-4399\4354\004\Drawings\CAD\108662\roadway\sheets\086662UN002.dgn Sheet 2/2/2022 11:37:57 AM Allisonw

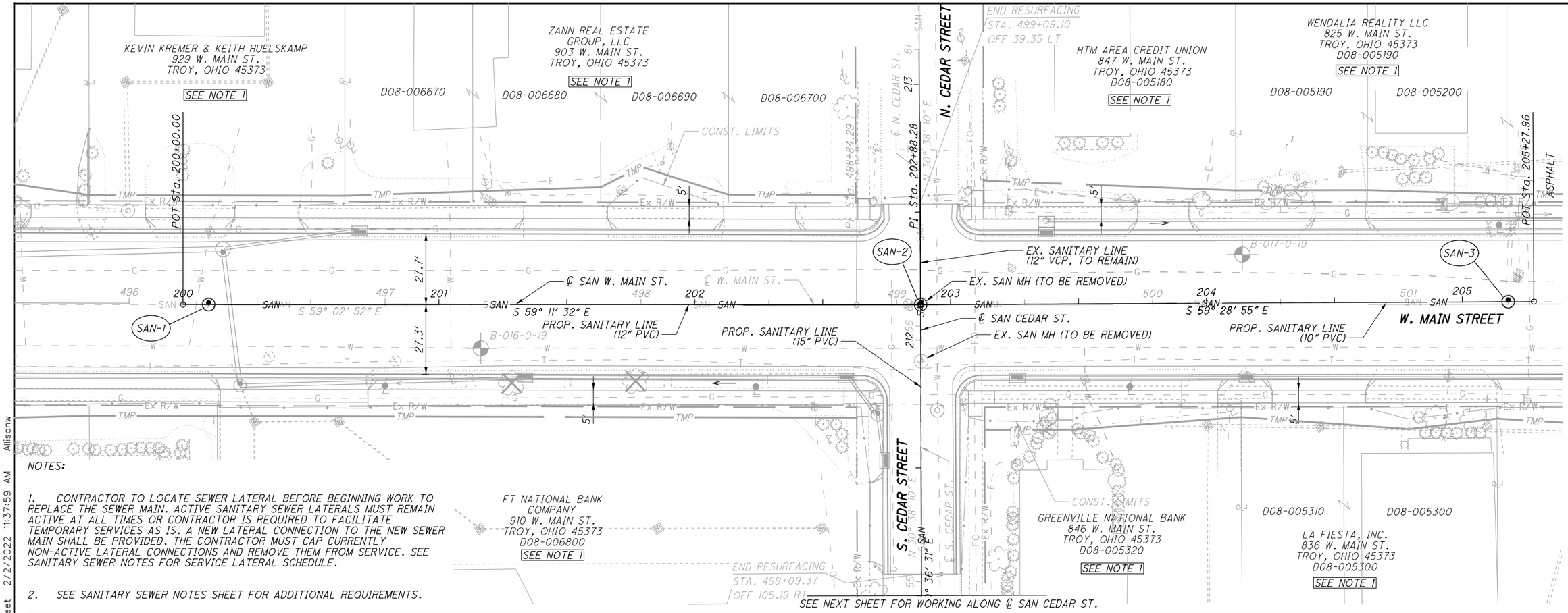

NOTES:

1. CONTRACTOR TO LOCATE SEWER LATERAL BEFORE BEGINNING WORK TO REPLACE THE SEWER MAIN. ACTIVE SANITARY SEWER LATERALS MUST REMAIN ACTIVE AT ALL TIMES OR CONTRACTOR IS REQUIRED TO FACILITATE TEMPORARY SERVICES AS IS. A NEW LATERAL CONNECTION TO THE NEW SEWER MAIN SHALL BE PROVIDED. THE CONTRACTOR MUST CAP CURRENTLY NON-ACTIVE LATERAL CONNECTIONS AND REMOVE THEM FROM SERVICE. SEE SANITARY SEWER NOTES FOR SERVICE LATERAL SCHEDULE.

2. SEE SANITARY SEWER NOTES SHEET FOR ADDITIONAL REQUIREMENTS.

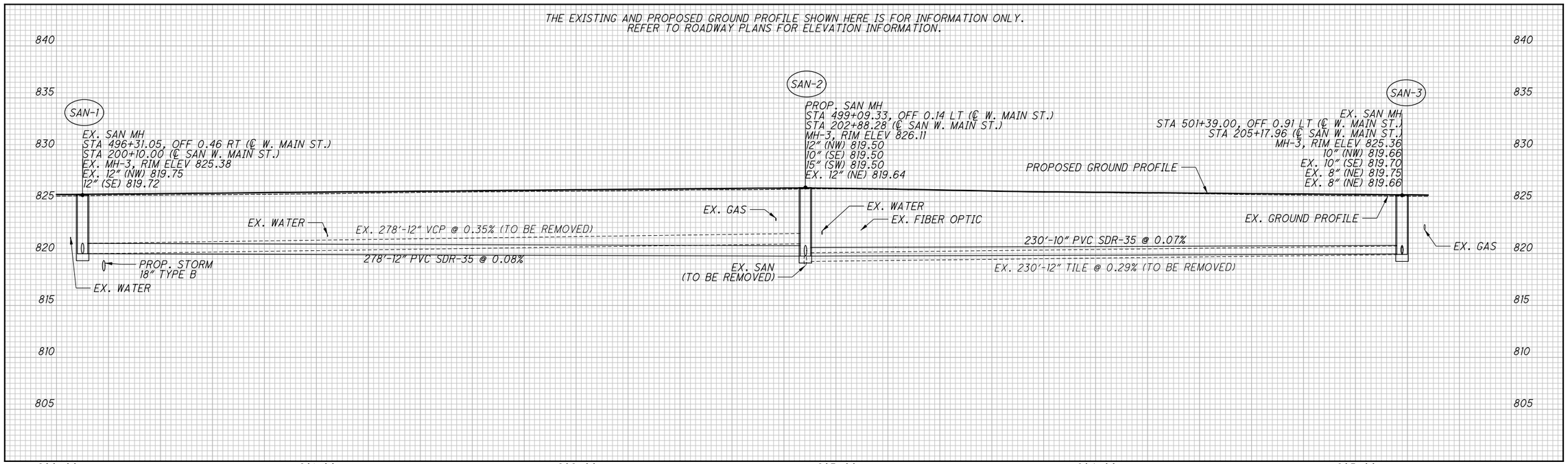

HORIZONTAL SCALE IN FEET 0 10 20 40

CALCULATED ATW
CHECKED JDH

SANITARY PLAN AND PROFILE (W. MAIN ST.)
WEST MAIN STREET (SR 41)

MIA-41-09.49

S:\CIN\4300--4399\4354\004\Drawings\CAD\108662\roadway\sheets\08662GU001.dgn Sheet 2/2/2022 11:37:59 AM Allisonw

NOTES:

1. CONTRACTOR TO LOCATE SEWER LATERAL BEFORE BEGINNING WORK TO REPLACE THE SEWER MAIN. ACTIVE SANITARY SEWER LATERALS MUST REMAIN ACTIVE AT ALL TIMES OR CONTRACTOR IS REQUIRED TO FACILITATE TEMPORARY SERVICES AS IS. A NEW LATERAL CONNECTION TO THE NEW SEWER MAIN SHALL BE PROVIDED. THE CONTRACTOR MUST CAP CURRENTLY NON-ACTIVE LATERAL CONNECTIONS AND REMOVE THEM FROM SERVICE. SEE SANITARY SEWER NOTES FOR SERVICE LATERAL SCHEDULE.

2. SEE SANITARY SEWER NOTES SHEET FOR ADDITIONAL REQUIREMENTS.

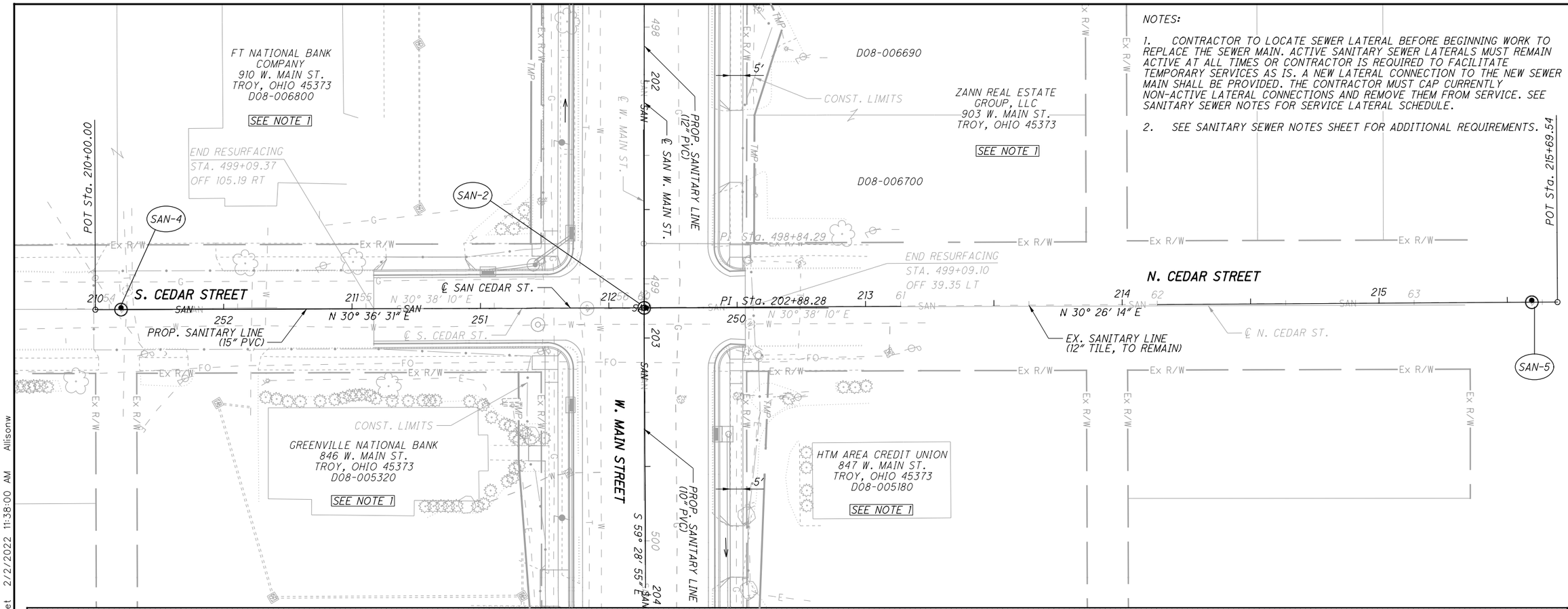

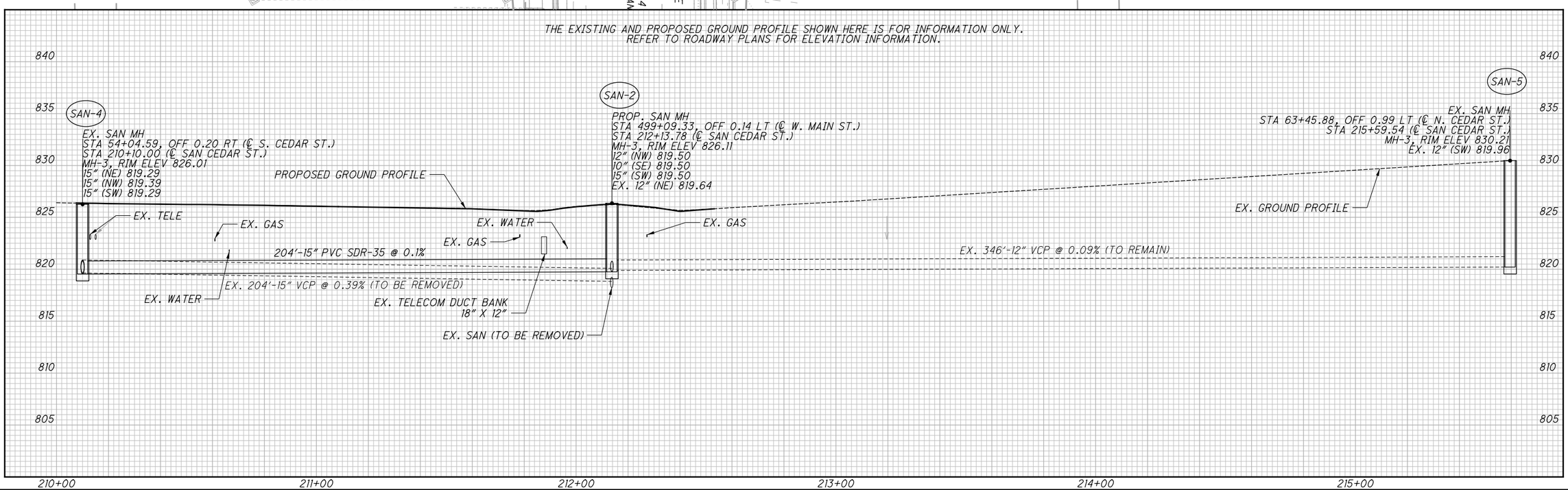

HORIZONTAL SCALE IN FEET 0 10 20 40

CALCULATED ATW
CHECKED JDH

SANITARY PLAN AND PROFILE (W. MAIN ST.) WEST MAIN STREET (SR 41)

MIA-41-09.49

S:\CIN\4300--4399\4354\004\Drawings\CAD\108662\roadway\sheets\08662GU002.dgn Sheet 2/2/2022 11:38:00 AM Allisonw

NOTES

FRAME AND LID

A. LOCATE THE CENTERLINE OF MANHOLE COVERS OVER THE CENTERLINE OF THE MAIN SEWER WHENEVER POSSIBLE.
B. FINAL GRADING IS TO BE 1/4"–1/2" BELOW FINAL SURFACE OF IN PAVEMENT AREAS. OFF PAVEMENT AREAS SHALL BE 3" ABOVE EXISTING GROUND SURFACE.
C. SANITARY MANHOLE FRAMES AND COVERS SHALL BE EAST JORDAN IRON WORKS NO. 1600 FOR HEAVY TRAFFIC OR EQUAL. LID SHALL BE SANITARY LETTERED, VENTED WITH HOLES, SELF–SEALING AND NON–BOLTED LIDS. NON VENTED LIDS ARE REQUIRED AT LOCATIONS THAT ARE SUBJECT TO INFLOW FROM SURFACE WATER.
D. (4) 3/4" DIA. STAINLESS STEEL ANCHOR BOLTS AND NUTS TO FASTEN MANHOLE FRAME TO MANHOLE CONE OR FLAT LID SECTION WHEN REQUIRED BY THE CITY ENGINEER.
E. PRECAST CONCRETE ADJUSTING RING 2" MIN. AND 12" MAX. THICKNESS. RINGS LESS THAN 2" SHALL BE A OF A COMPOSITE PLASTIC MATERIAL. NO WOOD SHIMS OR BRICKS ALLOWED.
F. CONSEAL CS–102 FLEXIBLE BUTYL RESIN SEALANT OR EQUIVALENT SHALL BE ⅜"X 1" MINIMUM STRIPS UNDER GRADE RINGS AND CASTING.

MANHOLE JOINTS

A. O–RING JOINT MUST MEET ASTM SPEC. 443. ALL JOINTS MUST BE KEPT AT A MINIMUM.
B. IN HIGH WATER TABLE SITUATIONS USE CRETEX OR EQUAL 9" WIDE JOINT WRAPS TO ALL JOINTS ON THE OUTSIDE OF THE MANHOLE

STEPS

A. MANHOLE STEPS SHALL BE SECURELY INSTALLED INTO EACH MANHOLE SECTION, BY THE MANUFACTURER, PRIOR TO DELIVERY TO THE JOB SITE
B. MANHOLE STEPS SHALL BE PF–1 STEP BY M.A. INDUSTRIES OR EQUIVALENT. STEPS SHALL BE INSTALLED IN ALL NEW MANHOLES TO ALLOW FOR ANCHORING FLOW METERING EQUIPMENT AND SAMPLING EQUIPMENT.

STRUCTURE

A. MATERIALS FOR BASES, RISERS, AND OTHER PRECAST SECTIONS, INCLUDING REINFORCEMENTS SHALL COMPLY WITH ASTM C–478.
B. MAXIMUM SANITARY MANHOLE SPACING SHALL BE 350'.
C. THE FLOW CHANNEL THROUGH MANHOLES SHALL BE MADE TO CONFORM IN SHAPE, SLOPE AND SMOOTHNESS TO THAT OF THE SEWERS.
D. ODOT CLASS "QC" CONCRETE.

PIPE CONNECTIONS

A. PIPE CONNECTIONS SHALL HAVE A FLEXIBLE WATERTIGHT JOINT SEAL MEETING ASTM 923–79, A–LOK OR EQUIVALENT.
B. TO CONNECT INTO EXISTING MANHOLE, THE MANHOLE SHALL BE CORED AND AN A–LOK XP SERIES FLEXIBLE CONNECTOR OR EQUIVALENT SHALL BE INSTALLED PER MANUFACTURER'S RECOMMENDATIONS. NON–SHRINK GROUT ALTERNATIVE MAY BE USED IN SPECIAL CIRCUMSTANCES WHEN PREVIOUSLY APPROVED BY CITY.
C. NO LATERALS SHALL PROTRUDE INTO THE INTERIOR MANHOLE.
D. CUT PIPE SHALL NOT EXTEND BEYOND THE INSIDE FACE OF THE MANHOLE WALL.
H. CONCRETE PLACED INSIDE THE MANHOLE SHALL NOT BE PLACED BETWEEN THE PIPE AND THE OPENING SO AS TO INTERFERE IN ANY WAY WITH THE FLEXIBILITY OF THE JOINT.

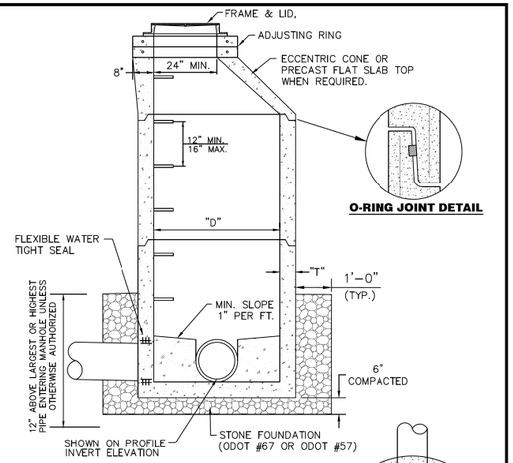

O-RING JOINT DETAIL

PRECAST SECTIONS

PIPE SIZE	T	D
24" & UNDER	5"	48"
27" & ABOVE	6"	60"

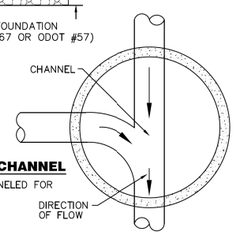

STANDARD INVERT CHANNEL

ALL INVERTS TO BE CHANNELED FOR OPTIMUM FLOW.

CITY OF TROY	TYPE 3 SANITARY MANHOLE	REVISIONS: OCT 2018	DATE APPROVED: NOV 2017 PAGE No. 900–4

ChoiceOne Engineering

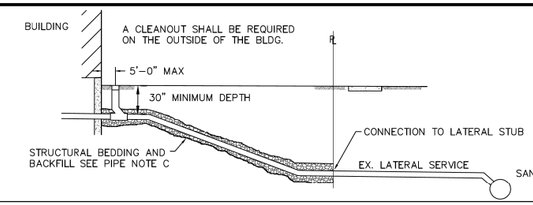

NOTES

A. SEPTIC TANKS SHALL BE ABANDONED IN ACCORDANCE WITH MIAMI COUNTY PUBLIC HEALTH DEPARTMENT.
B. ROOF DOWNSPOUTS, EXTERIOR FOUNDATION DRAINS, AREAWAY DRAINS OR OTHER SURFACE RUNOFF OR GROUNDWATER SHALL NOT BE CONNECTED TO THE SANITARY SEWER MAIN. BASEMENTS MUST HAVE A FLOOR DRAIN AND BE CONNECTED TO THE STORM SEWER (SUMP PUMP).
C. BEFORE BEGINNING WORK, A SEWER TAP PERMIT MUST BE OBTAINED.
D. WHEN THE BUILDING CONNECTION MUST ENTER INTO A PAVED PORTION OF THE STREET OR ALLEY, A RIGHT OF WAY PERMIT MUST BE OBTAINED BEFORE BEGINNING WORK.
E. WATER SERVICES SHALL BE A MINIMUM OF 10' MEASURED HORIZONTALLY FROM THE SEWER SERVICE AND SHALL BE A MINIMUM OF 18" ABOVE THE CROWN (WHENEVER POSSIBLE) OF THE SANITARY SEWER MAIN WHERE THE WATER SERVICE CROSSES THE SEWER MAIN.
F. CLEANOUTS ARE REQUIRED EVERY 100'.
G. NO SERVICE LINE SHALL BE ALLOWED TO CONNECT DIRECTLY INTO A MANHOLE, SUBJECT TO APPROVAL BY THE CITY IN SPECIFIC CASES.

PIPE

A. THE PIPE MATERIAL SHALL BE PVC SDR 35 OR SCHEDULE 40, UTILIZING PURPLE PRIMER, OR AN APPROVED EQUIVALENT.
B. PIPE SIZES FOR BUILDING CONNECTIONS SHALL BE 4" MINIMUM FOR SINGLE RESIDENCE AND 6" MINIMUM FOR ALL OTHER USES. THE LATERALS SHALL BE RAN TO WITHIN 3' OF THE OUTSIDE OF THE BUILDING.
C. THE PIPE SHALL BE BEDDED ON 4" MINIMUM STRUCTURAL BEDDING, ODOT 67'S, 57'S, CR 8'S AND BACKFILLED PER THE TRENCH DETAIL.

PIPE LAYING

A. THE OPEN ENDS OF ALL PIPES SHALL BE PLUGGED OR OTHERWISE CLOSED WITH A WATERTIGHT PLUG TO THE APPROVAL OF THE CITY BEFORE LEAVING THE WORK SITE FOR THE NIGHT.
B. THE JOINING OF PIPE WITH CONCRETE SHALL NOT BE ACCEPTED.
C. BEFORE MAKING A CONNECTION TO AN EXISTING SEWER OR SERVICE LATERAL, THE CONTRACTOR SHALL CHECK THE EXISTING PIPE BY UTILIZING A SEWER EEL, STRAP, OR SEWER ROD TO SEE THAT THE EXISTING PIPE IS CONNECTED TO THE SANITARY SEWER MAIN.
D. IN THE CASE WHERE A 90° CORNER IS REQUIRED IN THE BUILDING CONNECTION LINE, 2 45° BENDS SHALL BE USED IN LIEU OF A 90° BEND. A CLEANOUT WILL BE REQUIRED.
E. THE BUILDING CONNECTION LINE SHALL BE LAID IN AS STRAIGHT A LINE, FROM THE BUILDING TO THE EXISTING LATERAL, AS POSSIBLE.
F. ANY TWO–FAMILY RESIDENCE THAT HAS AN EXISTING 4" LATERAL AVAILABLE TO THE LOT SHALL BE REQUIRED TO SEPARATE THE 4" COMMON LATERAL INTO INDIVIDUAL LATERALS, WITH CLEANOUTS, ON THE OUTSIDE OF THE BUILDING UNLESS OTHERWISE APPROVED.
G. ALL NEW CONSTRUCTION SHALL HAVE SANITARY LATERALS INSTALLED.
H. DRAWINGS SHOWING LATERAL LOCATIONS SHALL BE SUBMITTED WITH A ZONING PERMIT.
I. MINIMUM SLOPE OF SANITARY LATERAL SHALL BE 1/4" PER FOOT. (2% GRADE)

TESTING

A. PIPE SHALL BE FLUSHED AND CLEANED PRIOR TO TESTING
B. THE OUTSIDE PLUMBER SHALL BE RESPONSIBLE FOR THE SCHEDULING THE TESTING (VISUAL OR OTHER, AS REQUIRED) SHALL BE SCHEDULED WITH THE ENGINEERING DEPARTMENT.
C. ALL NEW BUILDING CONNECTIONS SHALL BE BY AIR WITH 4 PSI PRESSURE.
D. THE SEWER TEST SHALL BE FROM THE CLEANOUT TO THE PROPERTY LINE CONNECTION OR TO THE MAIN SEWER, WHICHEVER IS APPLICABLE.
E. WHEN A SUBSTANTIAL AMOUNT OF AN EXISTING LATERAL IS REPLACED, THE NEW PORTION OF THE LATERAL SHALL REQUIRE A TEST UNLESS OTHERWISE APPROVED.
F. A TEST TEE MAY BE REQUIRED DEPENDING ON EXISTING CONDITIONS. THE TEST TEE SHALL BE CUT OFF AND CAPPED BELOW GRADE AFTER SUCCESSFUL TESTING.

INSPECTION

A. A TAP INSPECTION SHALL BE REQUIRED ON ALL NEW BUILDING CONNECTIONS AND ALSO ON THE REPLACEMENT OF EXISTING BUILDING CONNECTIONS.
B. WHEN THE BUILDING SEWER IS READY FOR INSPECTION, THE CITY SHALL BE GIVEN 24 HOURS ADVANCE NOTICE. THE PIPE SHALL BE LEFT UNCOVERED UNTIL AN INSPECTION HAS BEEN MADE AND APPROVED.
C. ANY NEW BUILDING CONNECTION INSTALLED WITHOUT AN INSPECTION SHALL RESULT IN NO ISSUANCE OF A WATER METER FOR THE BUILDING. IF THIS OCCURS, THE ENTIRE LATERAL SHALL BE UNCOVERED SO THAT A PROPER INSPECTION CAN BE MADE.
D. NO TAP FEE IS REQUIRED IF AN OLD BUILDING SEWER IS TO BE REUSED. AN INSPECTION WILL BE REQUIRED. THE PUBLIC UTILITY DEPT. SHALL INSPECT THE ENTIRE BUILDING CONNECTION FROM THE CLEANOUT TO THE PROPERTY LINE CONNECTION OR TO THE MAIN SEWER, WHICHEVER IS APPLICABLE.
E. WHEN A SADDLE IS TO BE INSTALLED, THE INSPECTOR SHALL BE PRESENT WHILE THE SANITARY SEWER MAIN IS BEING CUT INTO. A SADDLE MAY BE USED WHERE A TEE OR WYE IS NOT PRESENT FOR LATERAL CONNECTION AND WHERE FLOW IS TO GREAT TO ALLOW THE MAIN TO BE CUT. ALWAYS COMPLETELY ENCASE CONNECTIONS AT ANY DEPTH. (12" AND OVER AS APPROVED BY THE CITY.)
F. BEFORE MAKING A CONNECTION TO AN EXISTING SEWER TAP OR SEWER LATERAL, THE CONTRACTOR SHALL CHECK THE EXISTING PIPE BY UTILIZING A SEWER EEL, STRAP, OR SEWER ROD TO SEE THAT THE EXISTING PIPE IS CONNECTED TO THE MAIN SEWER. IF NEEDED, THE CONTRACTOR MAY NEED TO USE A HYDRAULIC SEWER CLEANER.

CITY OF TROY	BUILDING CONNECTION DETAIL	REVISIONS:	DATE APPROVED: NOV 2017 PAGE No. 900–7

ChoiceOne Engineering

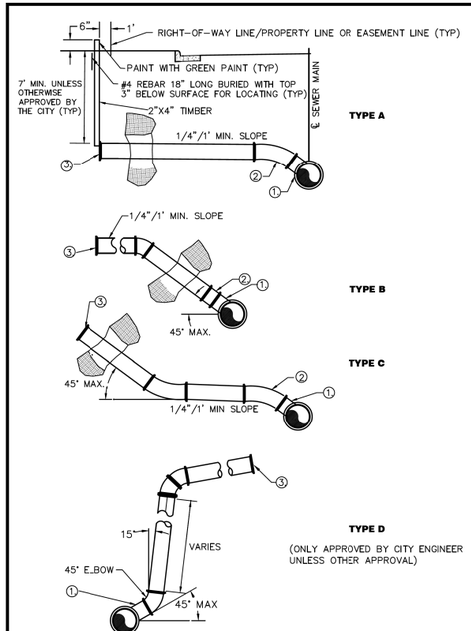

NOTES

A. RISER PIPE TO BE BEDDED SOLIDLY AGAINST UNDISTURBED GROUND. ALSO, TEE MAY BE SUBSTITUTED FOR WYE BRANCH IF SPECIFIED.

B. RISER PIPE TO BE INSTALLED SO THAT CONNECTING SERVICE SHALL HAVE A MINIMUM DEPTH OF 7' AT THE PROPERTY LINE UNLESS OTHERWISE DIRECTED BY THE CITY.

C. EACH SANITARY LATERAL MUST BE IN SEPARATE TRENCHES FROM STORM, WATER OR OTHER CONDITIONS.

D. EXACT MEASUREMENT MUST BE PROVIDED SHOWING DISTANCE FROM NEAREST MANHOLE, LENGTH OF LATERAL, LOCATION OF BENDS, AND THE END OF LATERAL. THE ELEVATION OF INVERT RELATIVE TO THE BACK OF CURB ELEVATION OR SOME OTHER REFERENCE POINT EASILY RECOVERED IS ALSO REQUIRED. ALL INFORMATION SHALL BE GIVEN TO THE CITY WITHIN 15 DAYS AFTER INSTALLATION.

LEGEND

(1) WYE–ROTATE 45° FROM HORIZONTAL UNLESS OTHERWISE SPECIFIED.

(2) 1/8° BEND OR 1/16° BEND AS NEEDED.

(3) CAP UNLESS JOINING EXISTING SERVICE LATERAL. SEE SANITARY SEWER DETAIL TO CONNECT TO AN EXISTING MAIN.

CITY OF TROY	SERVICE RISER AND SERVICE LATERAL	REVISIONS:	DATE APPROVED: NOV 2017 PAGE No. 900–8

ChoiceOne Engineering

NOTES

A. IF A WYE CAN NOT BE CUT INTO THE MAIN LINE A SADDLE TYPE CONNECTION MAY BE JSED WITH CITY APPROVAL.

B. NO SADDLES ARE TO BE INSTALLED ON CLAY OR CONCRETE SANITARY MAINS WITHOUT PRIOR APPROVAL FROM THE CITY ENGINEER.

C. SADDLE SHALL BE ROMAC CB–4.63UN OR EQUAL.

D. VITRIFIED CLAY PIPE SHALL BE CAREFULLY TAPPED AND BE SAME DIAMETER AS LATERAL CONNECTOR.

E. SEE TRENCH DETAIL FOR BACKFILL AND BEDDING REQUIREMENT.

F. ALL BOLTS, WASHERS, NUTS, HOSE CLAMPS AND STRAPS SHALL BE STAINLESS STEEL AND MEET ASTM STANDARDS.

G. ALL TAPS MUST BE INSPECTED AND APPROVED BY THE CITY PRIOR TO BACKFILLING.

H. OTHER SADDLE TYPES THAT MAY BE APPROVED ON CASE–BY–CASE BASIS DEPENDING ON SITUATIONS ARE ROMAC STYLE "CB" SEWER SADDLE AND DFW/HPI FLEXIBLE SADDLE.

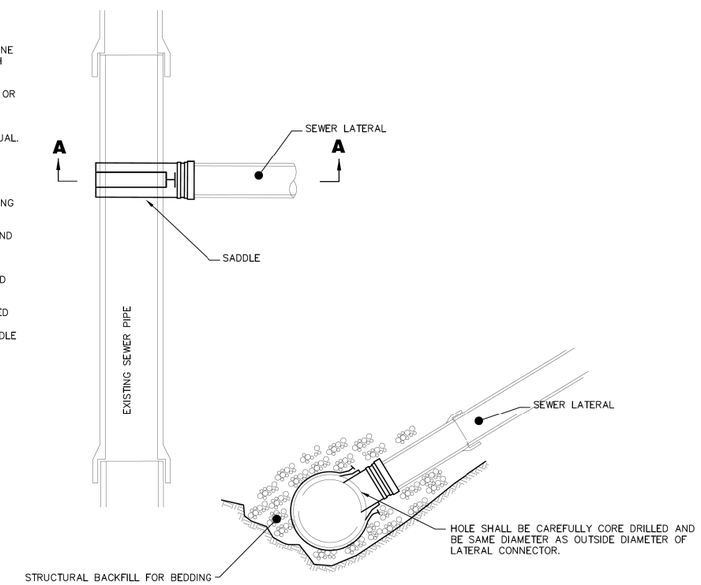

SECTION A-A

CITY OF TROY	SANITARY SEWER SADDLE DETAILS	REVISIONS:	DATE APPROVED: NOV 2017 PAGE No. 900–9

ChoiceOne Engineering

CALCULATED ATW
CHECKED JDH

SANITARY SEWER DETAILS

MIA-41-09.49

S:\CIN\4300--4399\4354\004\Drawings\CAD\108662\roadway\sheets\08662UD001.dgn Sheet 2/2/2022 11:38:01 AM Allisonw

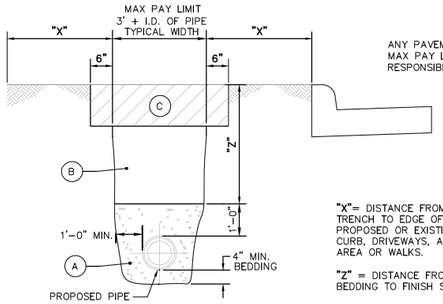

ANY PAVEMENT REPAIR BEYOND THE MAX PAY LIMIT WILL BE THE RESPONSIBITY OF THE CONTRACTOR

"X"= DISTANCE FROM EDGE OF TRENCH TO EDGE OF CLOSEST PROPOSED OR EXISTING PAVEMENT, CURB, DRIVEWAYS, ALLEYS, STONE AREA OR WALKS.

"Z" = DISTANCE FROM TOP OF BEDDING TO FINISH SURFACE.

TRENCH DETAIL

TRENCH COMPACTION METHODS

A. FLOODING SHALL NOT BE PERMITTED.

B. MECHANICAL DEVICES, HAND DEVICES, VIBRATING PLATES OR OTHER EQUIPMENT APPROVED BY THE CITY ARE ACCEPTABLE 1' ABOVE PIPE IN UNIFORM LIFTS OF 12" (LOOSE DEPTH) OF EXISTING NATIVE MATERIAL AND 6" OF STRUCTURAL BACKFILL. THE HEIGHT OF LIFTS WILL DEPEND UPON THE TYPE OF MECHANICAL EQUIPMENT BEING USED. THE HEIGHT WILL BE 6" FOR HAND OPERATED TOOLS AND UP TO 12" ON EQUIPMENT MOUNTED TOOLS. THE COMPACTION EQUIPMENT SHALL BE CAPABLE OF COMPACTING THE MATERIAL UNDER THE HAUNCH OF THE PIPE.

C. DENSITY FOR THE ABOVE METHODS SHALL BE NO LESS THAN THAT OF THE SURROUNDING GROUND UNLESS OTHERWISE SPECIFIED.

NOTES

A. STRUCTURAL BEDDING SHALL BE CRUSHED STONE OR GRAVEL, ODOT #57 OR #8'S, OR OTHER APPROVED EQUIVALENT. STRUCTURAL BEDDING FOR WATER MAIN AND WATER SERVICES SHALL BE NATURAL WASHED GRAVEL (NO LIMESTONE) ODOT #57 OR #9'S OR #8'S.

B. ALL TRENCHES WHERE "X" IS GREATER THAN "Z" FROM PROPOSED OR EXISTING PAVEMENT, CURB, DRIVEWAYS, ALLEYS, STONE AREA OR WALKS CAN BE COMPACTED EXISTING NATIVE MATERIAL IN 12" MAXIMUM LIFTS OR AS APPROVED BY THE CITY. NO MATERIAL SHALL BE USED FOR BACK FILLING THAT CONTAINS STONE, ROCKS, ETC., GREATER THAN 3" DIAMETER.

ALL TRENCHES WHERE "Z" IS GREATER THAN "X" FROM PROPOSED OR EXISTING PAVEMENT, CURB, DRIVEWAYS, ALLEYS, STONE AREA OR WALKS SHALL BE COMPACTED WITH STRUCTURAL BACKFILL MATERIAL ODOT 703.11 TYPE 1 OR TYPE 2 OR ODOT 310'S #57, IN 6" MAXIMUM LIFTS OR LOW STRENGTH MORTAR BACKFILL ODOT ITEM 613 TYPE 1 UNTIL THE TOP OF THE COMPACTED STRUCTURAL BACKFILL OR LOW STRENGTH MORTAR BACKFILL IS HIGH ENOUGH WHERE "X" IS GREATER THAN "Z".

A DENSITY TEST ON STRUCTURAL BACKFILL OF 98% OF ASTM D698 STANDARD PROCTOR CURVE MAY BE REQUIRED TO BE PERFORMED BY A COMMERCIAL TESTING LAB SATISFACTORY TO THE CITY.

C. OFF-PAVEMENT AREAS SHALL BE PROVIDED WITH A MINIMUM OF 12" OF TOPSOIL OVER THE COMPACTED MATERIAL AND THEN SEEDED AND MULCHED PER ODOT ITEM 659 AND 100-1.

IN-PAVEMENT AREAS SHALL MATCH EXISTING ASPHALT SECTION OR FOLLOW TYPICAL PAVEMENT RESTORATION DETAILS, WHICHEVER IS MORE RESTRICTIVE. SEE BUTT JOINT DETAIL ON ASPHALT OVERLAY SHEET FOR JOINING TO EXISTING PAVEMENT.

ALL JOINTS SHALL BE SEALED.

D. THE LAYING OF PIPE ON EXISTING DIRT WITH THE BELLS CUT OUT SHALL NOT BE PERMITTED.

E. THE OPEN ENDS OF ALL PIPES AND SPECIAL CASTINGS SHALL BE PLUGGED OR OTHERWISE CLOSED WITH A WATERTIGHT PLUG TO THE APPROVAL OF THE CITY BEFORE LEAVING THE WORK FOR THE NIGHT.

CITY OF TROY ChoiceOne Engineering	TRENCH DETAIL	REVISIONS: DEC 2019	DATE APPROVED: NOV 2017 PAGE No. 100-3

CALCULATED ATW
CHECKED JDH

SANITARY SEWER DETAILS

MIA-41-09.49

S:\CIN\4300--4399\4354\004\Drawings\CAD\108662\roadway\sheets\08662UD002.dgn Sheet 2/2/2022 11:38:30 AM Allisonw

NOTES

A. NO WORK SHALL BE APPROVED OR ACCEPTED BY THE CITY UNLESS 2 WORKING DAYS NOTICE OF COMMENCING WORK IS GIVEN TO THE CITY.

B. THE MINIMUM LENGTH OF PIPE NIPPLES SHALL BE 18" UNLESS OTHERWISE APPROVED BY THE CITY.

C. ALL CUSTOMERS SHALL MEET BACKFLOW PREVENTION REQUIREMENTS AS PER LOCAL, STATE, AND FEDERAL REGULATIONS.

D. ALL WATERLINE CONSTRUCTION INCLUDING EXTENSIONS ON PRIVATE PROPERTY SHALL FOLLOW THE CITY STANDARDS, ODOT ITEM 638, AND AWWA STANDARDS WHICHEVER IS MORE RESTRICTIVE AS DETERMINED BY THE CITY.

E. OPERATION OF CITY FIRE HYDRANTS, VALVES, METERS, SERVICES, STOPS, AND ALL OTHER MECHANICAL INFRASTRUCTURE ITEMS IS STRICTLY PROHIBITED.

F. ALL WATER MAINS SHALL HAVE A MINIMUM DEPTH OF 5'–0" AND A MAXIMUM DEPTH OF 6'–0" FROM TOP OF PIPE TO SURFACE, UNLESS OTHERWISE APPROVED FOR DESIGN.

G. ALL TAPS INTO EXISTING WATER MAIN SHALL BE INSTALLED OR OBSERVED BY CITY OF TROY.

H. ALL SERVICE CONNECTIONS REQUIRE A METER.

I. A REPRESENTATIVE FROM THE PROPERTY OWNER OR DEVELOPER SHALL BE RESPONSIBLE FOR PAYING TAP–IN FEE AND SIGNING UP FOR ACCOUNT IN ORDER FOR A METER TO BE SET.

J. DEADENDS ARE NOT PERMITTED AND MUST BE LOOPED UNLESS THEY ARE DEEMED UNPRACTICAL BY THE CITY ENGINEERING DEPARTMENT AFTER A REVIEW OF A WATER MAIN DESIGN. WHEN APPROVED THEY SHALL BE TERMINATED WITH A FIRE HYDRANT AT THE END.

ABANDONED WATER MAIN

DURING THE CONSTRUCTION OF THIS PROJECT, IF THERE ARE CONFLICTS THAT ARISE BETWEEN PROPOSED CONSTRUCTION AND THE PROPOSED AEANDONED WATER MAIN, THE CONTRACTOR MAY CUT AND REMOVE THE EXISTING WATER MAIN AND PLUG THE OPEN ENDS ONLY AFTER THE EXISTING WATER MAIN IS COMPLETELY ABANDONED. THE CONTRACTOR SHALL CLOSE ALL ABANDONED VALVES, REMOVE THE VALVE BOX, AND PLACE CONCRETE TO SECURE VALVE IN THE CLOSED POSITION WHEN SYSTEM IS APPROVED, THEN TRANSFER TO NEW WATER MAIN. THE ABOVE WORK IS INCIDENTAL TO ITEM 638 WATER

MATERIAL SPECIFICATIONS

A. WATER MAIN SHALL BE AWWA C–151 DUCTILE IRON PIPE CLASS 52, WITH SLIP–ON JOINTS AND RUBBER GASKETS. ALL WATER MAIN SHALL BE A MINIMUM OF 8" IN DIAMETER.

B. BELL JOINT RESTRAINTS – USE FIELD LOCK BY U.S. PIPE OR APPROVED EQUIVALENT.

C. MECHANICAL JOINT RESTRAINTS – EBAA IRON MEGALUG RETAINER GLAND OR EQUIVALENT.

D. FIRE HYDRANTS – SEE FIRE HYDRANT DETAIL.

E. GATE VALVES – GATE VALVES SHALL BE AWWA C–515, RESILIENT WEDGE, NONRISING STEM, MECHANICAL JOINT, 150 PSI WORKING PRESSURE, OPEN LEFT WITH ARROW INDICATING OPEN DIRECTION, MUELLER OR EQUIVALENT

F. VALVE BOXES SHALL BE 3–PIECE, ADJUSTABLE 36" TO 48", 5.25" DIAMETER NOMINAL, ADJUSTABLE SCREW TYPE, COVER MARKED "WATER", DOMESTIC MADE ONLY.

G. TRACER WIRE IS REQUIRED OVER ALL WATER MAIN REGARDLESS OF PIPE TYPE. SEE TRACER WIRE DETAIL.

DOMESTIC STEEL

DOMESTIC STEEL USE REQUIREMENTS AS SPECIFIED IN SECTION 153.011 OF THE OHIO REVISED CODE APPLY TO ALL FITTINGS, PIPE, AND VALVES. COPIES OF SECTION 153.011 OF THE OHIO REVISED CODE CAN BE OBTAINED FROM OF THE DEPARTMENT OF ADMINISTRATIVE SERVICES.

FITTINGS, VALVES AND HYDRANTS

A. FITTINGS OR SPECIALS IN SIZES 12" THROUGH 48" SHALL CONFORM TO ALL REQUIREMENTS OF AWWA C–153. FITTINGS AND SPECIALS 12" AND SMALLER SHALL BE CLASS 250. LARGER FITTINGS AND SPECIALS SHALL BE CLASS 150. FITTINGS AND SPECIALS SHALL HAVE MECHANICAL JOINTS AND SHALL BE DUCTILE IRON. CLUSTER VALVES WHENEVER POSSIBLE UNLESS APPROVED BY THE CITY.

B.

MAXIMUM SPACING UNLESS OTHERWISE APPROVED	HYDRANTS	VALVES
SINGLE & TWO FAMILY RESIDENTIAL	500'	800'
INDUSTRIAL, COMMERCIAL & MULTI–FAMLY	300'	500'

C. ALL TEES AND CROSSES SHALL BE VALVED IN EACH DIRECTION UNLESS OTHERWISE APPROVED.

D. NO VALVE SHALL BE OPERATED BY PERSONNEL OTHER THAN A REPRESENTATIVE EMPLOYED BY THE CITY.

CITY OF TROY — ChoiceOne Engineering

MISCELLANEOUS WATER NOTES 1

REVISIONS: OCT 2018 | DATE APPROVED: NOV 2017 | PAGE No. 800–1

DISINFECTION

A. DISINFECTION TESTING SHALL BE PERFORMED PRIOR TO HYDROSTATIC TESTING. COORDINATE WITH CITY OF TROY TO PERFORM ALL WATER MAIN TESTING. THE COMPLETED WATER WORK SHALL BE DISINFECTED IN ACCORDANCE WITH AWWA C–651.

B. DISINFECTION OR STERILIZATION OF NEW MAINS AND SERVICES, AS REQUIRED BY THE OEPA, SHALL BE COORDINATED THROUGH THE CITY ENGINEER OR CITY ENGINEER'S REPRESENTATIVE. THE CITY ENGINEER OR CITY ENGINEER'S REPRESENTATIVE RESERVES THE RIGHT TO REQUIRE STRICTER CHLORINE RESIDUAL REQUIREMENTS ON A CASE–BY–CASE BASIS.

C. MAINTAIN PIPES FREE OF DIRT AND FOREIGN MATTER DURING CONSTRUCTION BY DEWATERING TRENCH AND SEALING OPEN PIPE BARRELS. SWAB EACH LENGTH OF PIPE AS IT IS INSTALLED. UPON COMPLETION OF MAIN, ISOLATE MAIN SEGMENTS AND FLUSH PIPE AT 2 FPS VELOCITY.

D. STERILIZE MAIN IN ACCORDANCE WITH AWWA C–651. INJECT 3% TO 5% HYPO CHLORITE SOLUTION TO PROVIDE 50 TO 60 MG PER LITER CONCENTRATION IN MAIN. CHLORINE MAY BE PLACED IN EACH SECTION OF PIPE AT THE TIME OF INSTALLATION. SAMPLE WATER AT EACH HYDRANT OR IF NO HYDRANT IS AVAILABLE, A SAMPLE TAP SHALL BE INSTALLED BY CONTRACTOR EVERY 1200 FT.. ANALYZE SAMPLE USING ORTHOTOLIDINE REAGENT TO VERIFY FREE CHLORINE CONCENTRATION. MAINTAIN CONCENTRATION IN MAIN FOR 24 HOURS. SAMPLE HYDRANTS AT COMPLETION OF STERILIZATION VERIFYING MINIMUM CHLORINE RESIDUAL OF 20 MG PER LITER.

E. CONTRACTOR SHALL ACCOMMODATE FLUSHING AND SAMPLE LOCATIONS

F. WATER SAMPLES – BACTERIOLOGICAL TEST PER AWWA C–651. TEST TO BE COLLECTED AND PERFORMED BY THE CITY.

HYDROSTATIC TEST

A. AFTER THE PIPE HAS BEEN LAID AND BACKFILLED, ALL NEWLY LAID PIPE OR VALVED SECTION SHALL BE SUBJECTED TO HYDROSTATIC PRESSURE AND LEAKAGE TEST. ALL WATER MAINS MUST BE HYDROSTATICALLY TESTED (AWWA C–605). THE LEAKAGE TEST PRESSURE SHALL BE NOT LESS THAN 150 PSI FOR 30 MINUTES FOR DOMESTIC WATER MAIN. THE TEST SHALL NOT BE LESS THAN 200 PSI FOR 2 HOURS FOR FIRE WATER MAIN. HYDROSTATIC PRESSURE SHALL BE APPLIED BY MEANS OF A PUMP TAKING WATER FROM AN AUXILIARY SUPPLY. ALL PIPING MUST BE PROPERLY FILLED AND FLUSHED TO DISPEL ALL AIR BEFORE THE TEST IS MADE USING POTABLE WATER.

B. TESTING REQUIREMENTS FOR FIRE SUPPRESSION SYSTEMS SHALL BE IN ACCORDANCE TO THE REQUIREMENT OF THE CITY'S DIVISION OF FIRE.

C. LEAKAGE IS DEFINED AS THE QUANTITY OF WATER TO BE SUPPLIED INTO THE NEWLY LAID PIPE, OR ANY VALVED SECTION THEREOF, NECESSARY TO MAINTAIN THE SPECIFIED LEAKAGE TEST PRESSURE AFTER THE PIPE HAS BEEN FILLED WITH WATER AND THE AIR EXPELLED.

D. NO PIPE INSTALLATION WILL BE ACCEPTED IF THE LEAKAGE EXCEEDS THE LEAKAGE DETERMINED BY THE FOLLOWING FORMULA:

Where: S = length of pipe tested, in ft.
D = pipe diameter, in inches
P = average test pressure
L = allowable leakage per hour

$$L = \frac{S * D * \sqrt{P}}{148{,}000}$$

E. DURING THE HYDROSTATIC TEST, A THOROUGH EXAMINATION OF ALL PIPING, FITTINGS, VALVES, HYDRANTS, ETC. SHALL BE PERFORMED. LEAKING JOINTS SHALL BE TIGHTENED, AND CRACKED OR OTHERWISE DEFECTIVE MATERIAL SHALL BE REMOVED AND REPLACED AND THE TEST SHALL BE REPEATED UNTIL SATISFACTORY RESULTS ARE OBTAINED.

BELOW IS A TABLE WHICH REPRESENTS THE ALLOWABLE LEAKAGE IN GALLONS PER HOUR.

ALLOWABLE LEAKAGE PER 1000 FT. OF PIPELINE

Avg. Test Pressure psi(bar)	NOMINAL PIPE DIAMETER– INCHES 3	4	6	8	10	12
450(31)	0.43	0.57	0.86	1.15	1.43	1.72
400(28)	0.41	0.54	0.81	1.08	1.35	1.62
350(24)	0.38	0.51	0.76	1.01	1.26	1.52
300(21)	0.35	0.47	0.70	0.94	1.17	1.40
275(19)	0.34	0.45	0.67	0.90	1.12	1.34
250(17)	0.32	0.43	0.64	0.85	1.07	1.28
225(16)	0.30	0.41	0.61	0.81	1.01	1.22
200(14)	0.29	0.38	0.57	0.76	0.96	1.15
150(10)	0.25	0.33	0.50	0.66	0.83	0.99
175(12)	0.27	0.36	0.54	0.72	0.89	1.07

CITY OF TROY — ChoiceOne Engineering

MISCELLANEOUS WATER NOTES 2

REVISIONS: | DATE APPROVED: NOV. 2017 | PAGE No. 800–2

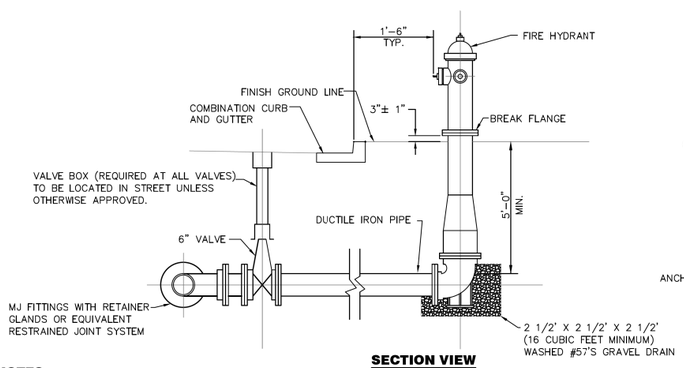

SECTION VIEW

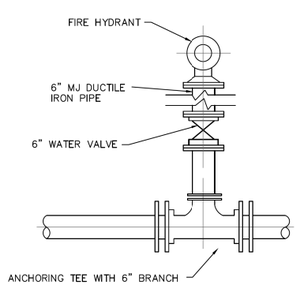

BASIC TEE DETAIL PLAN

NOTES

A. FIRE HYDRANTS – AMERICAN DARLING B84B; TWO 2–1/2" HOSE NOZZLE WITH DAYTON THREAD CONNECTIONS; ONE 4" I.D (4–1/2" O.D.) WITH 5" STORTZ PUMPER NOZZLE NOT NATIONAL STANDARD THREADS, CONFORMING TO AWWA, CCW TO OPEN, SELF–DRAINING, BREAK FLANGES 3" ABOVE GRADE.
B. FIRE HYDRANT BASES – HYDRANT INLET SHALL BE DESIGNED FOR MULTI–PURPOSE MATERIAL USE WITH A WIDE RANGE OF PIPE OUTSIDE DIAMETERS (O.D.), INLET SHALL INCORPORATE A STAB–FIT DESIGN REQUIRING THE USE OF ONLY ONE TYPE 304 STAINLESS STEEL FASTENER, RESTRAINT ACCESSORIES SHALL BE FACTORY INSTALLED AND ALL HYDRANT INLETS SHALL BE ALPHA DESIGN FURNISHED BY AMERICAN FLOW CONTROL.
C. GATE VALVES SHALL BE AWWA C–515, RESILIENT WEDGE, NONRISING STEM, MECHANICAL JOINT, 150 PSI WORKING PRESSURE, CCW TO OPEN WITH ARROW INDICATING OPEN DIRECTION, MUELLER OR EQUIVALENT. DOMESTIC MADE ONLY. VALVE SHALL BE PLACED AS CLOSE TO THE WATER MAIN AS POSSIBLE.
D. VALVE BOXES SHALL BE 3–PIECE, ADJUSTABLE 36" TO 48", 5.25" DIAMETER NOMINAL, ADJUSTABLE SCREW TYPE, COVER MARKED "WATER", DOMESTIC MADE ONLY.
E. ALL FITTINGS TO BE RESTRAINED AND AWWA C–153 DUCTILE IRON, COMPACT.
F. ALL VALVES AND HYDRANTS SHALL OPEN LEFT BY TURNING IN A COUNTER–CLOCKWISE DIRECTION.
G. CONTRACTOR TO FACE HYDRANT AS REQUIRED BY THE CITY.
H. HYDRANT BODY SHALL BE YELLOW AND DOME SHALL BE WHITE.
YELLOW– DOPANI YELLOW 3186 OR APPROVED EQUAL.
WHITE– POLAR WHITE WITH REFLECTIVE CLEAR COAT 822900

CITY OF TROY — ChoiceOne Engineering

FIRE HYDRANT DETAIL

REVISIONS: OCT 2018 | DATE APPROVED: NOV 2017 | PAGE No. 800–3

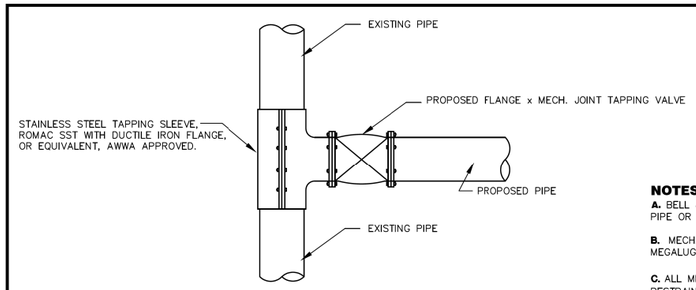

TAPPING SLEEVE AND VALVE DETAIL

NOTES

A. BELL JOINT RESTRAINTS – USE FIELD LOCK BY U.S. PIPE OR APPROVED EQUIVALENT.

B. MECHANICAL JOINT RESTRAINTS – EBAA IRON MEGALUG RETAINER GLAND OR EQUIVALENT.

C. ALL MECHANICAL BENDS, TEES, ETC., SHALL BE RESTRAINED USING MECHANICAL RESTRAINING JOINTS.

D. TEST SLEEVE TO 150 PSI(200 PSI FOR FIRE LINE) PRIOR TO CUTTING IN COVING PIPE

E. TAPPING SLEEVE AND VALVE SHALL BE PROVIDED BY CONTRACTOR WHEN TYING INTO THE EXISTING WATER MAIN.

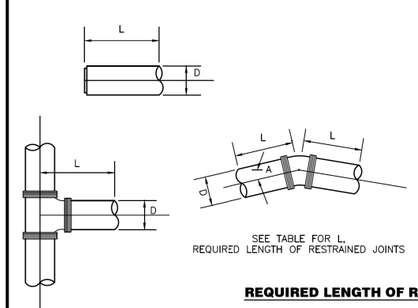

REQUIRED LENGTH OF RESTRAINED JOINTS FOR WATER MAINS

D–DIAMETER OF PIPE

A ~ DEGREE OF DEFLECTION	4"	6"	8"	10"	12"	16"	20"	24"
11 1/4°	4	5	7	8	9	11	14	16
22 1/2°	7	10	13	15	18	23	27	32
45°	14	20	26	31	36	47	57	66
90°	34	47	62	74	87	112	136	160
TEE	34	47	62	74	87	112	136	160
END	34	47	62	74	87	112	136	160

*REQUIRED RESTRAINED JOINT AT FITTING AND ONE BELL JOINT FROM FITTING MINIMUM.

DESIGN PARAMETERS FOR RESTRAINED JOINT TABLE
LAYING CONDITIONS – TYPE 2
SOIL DESIGNATION – SILT
DEPTH OF COVER – 5'–0"
DESIGN PRESSURE – 150 PSI
SAFETY FACTOR – 1.50
POLYWRAPPED PIPE
IF WORST CONDITIONS EXIST, ADDITIONAL RESTRAINTS WILL BE NECESSARY.

CITY OF TROY — ChoiceOne Engineering

RESTRAINING JOINTS AND TAPPING SLEEVE FOR WATER MAINS

REVISIONS: | DATE APPROVED: NOV 2017 | PAGE No. 800–4

CALCULATED ATW | CHECKED JDH

WATER WORK NOTES

MIA-41-09.49

S:\CIN\4300--4399\4354\004\Drawings\CAD\108662\roadway\sheets\08662WN001.dgn Sheet 2/2/2022 11:38:38 AM Allisonw

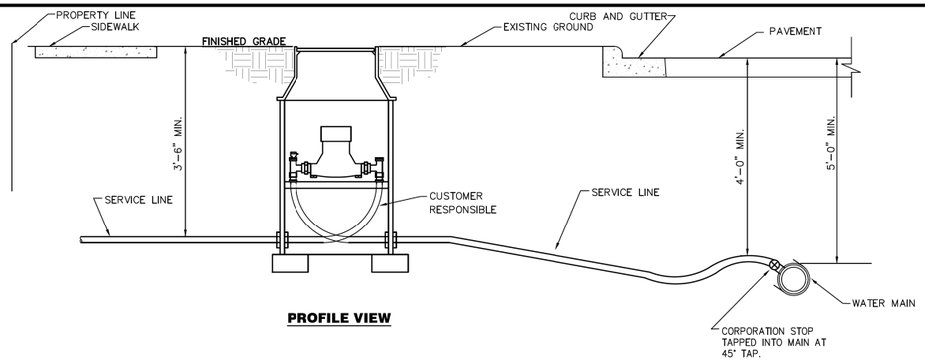

PROFILE VIEW

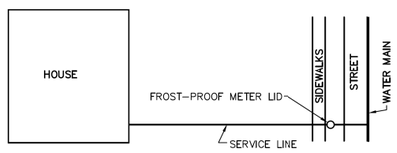

PLAN VIEW

NOTES

A. METER PIT TO BE PLACED BETWEEN CURB AND SIDEWALK.

B. METER PIT PROVIDED BY CITY AND PAID FOR THROUGH TAPPING FEE.

C. UNSATISFACTORY INSTALLATION WILL RESULT IN WATER NOT BEING TURNED ON.

D. SERVICE LINE IS TO BE BEDDED IN 4" AND COVERED WITH 12" OF NATURAL OR STRUCTURAL MATERAIL(NO LIMESTONE) FROM WATER MAIN TO HOUSE.

E. SERVICE LINE FROM METER PIT OR CURB STOP TO INSIDE BUILDING – TYPE "K" COPPER TUBE WITH COMPRESSION FITTINGS OR SDR-9 200 PSI AWWA C-901 OR APPROVED EQUAL.

F. CAP REQUIRED AT TEMPORARY END OF RESIDENTIAL SIDE.

CITY OF TROY	WATER MAIN SERVICE CONNECTION - OUTSIDE	REVISIONS: OCT 2018	DATE APPROVED: NOV 2017 PAGE No. 800-6

ChoiceOne Engineering

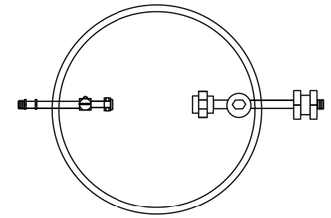

TOP VIEW SINGLE METER SETTING

SINGLE 5/8" METER

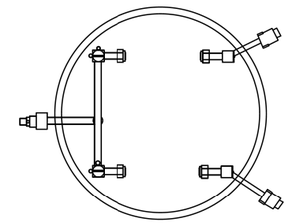

TOP VIEW DOUBLE METER SETTING

DOUBLE 5/8" OR 1" METER

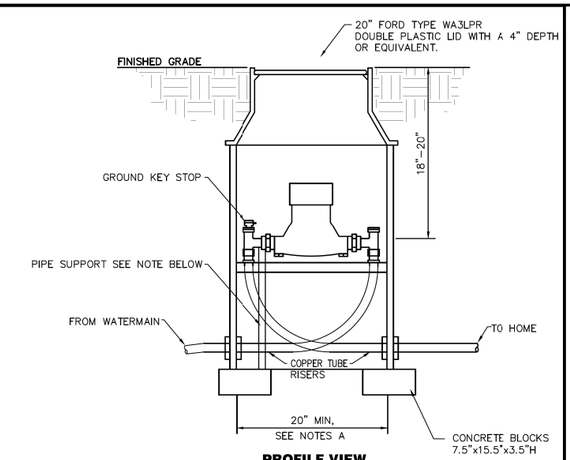

PROFILE VIEW

NOTES

A. 20" I.D. PLASTIC TILE FOR 5/8" METERS OR 24" I.D. (BULLET-STYLE) PLASTIC TILE FOR 1" METER OR DOUBLE 5/8" METERS. ALL OTHERS MUST BE APPROVED PRIOR TO INSTALLATION.

B. METER PIT LID MUST BE FLUSH OR 1" BELOW FINISHED GRADE.

C. SERVICE LINE FROM MAIN TO METER PIT OR CURB STOP SHALL BE 1" TYPE K COPPER.

D. IF SERVICE FROM METER PIT TO HOUSE IS PLASTIC, THE CUSTOMER SHALL PROVIDE PIPE SUPPORT IN METER PIT.

CITY OF TROY	1" AND SMALLER METER PIT DETAIL	REVISIONS:	DATE APPROVED: NOV 2017 PAGE No. 800-7

ChoiceOne Engineering

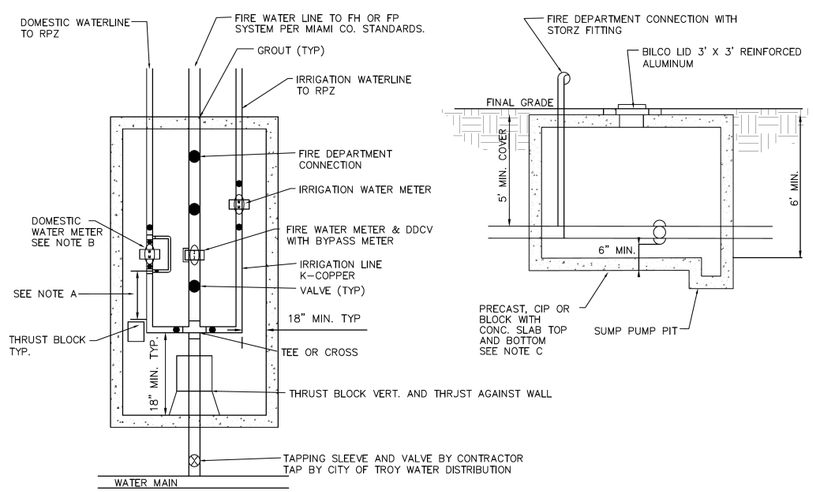

DEFINITIONS

RPZ = REDUCED PRESSURE BACKFLOW PREVENTER.
FH = FIRE HYDRANT
FP = FIRE PREVENTION
DDCV = DOUBLE DETECTOR CHECK VALVE.
DIP = DUCTILE IRON PIPE CLASS 52
● = VALVE UNLESS OTHERWISE NOTED
CIP = CAST IN PLACE

NOTES

A. DIMENSION SHALL BE A MIN. OF 5 TIMES THE PIPE DIAMETER BETWEEN METER AND UPSTREAM FITTING.
B. WATER METERS TO BE SUPPLIED BY THE CITY OF TROY. UNIFLANGE CONNECTION AND ALL OTHER PARTS SHALL BE SUPPLIED BY THE CONTRACTOR. FORD CUSTOM SETTER ON COPPER SERVICES OR DIP BYPASS ON 4 INCH AND LARGER LINES.
C. PIT SIZE AND ACTUAL CONFIGURATION TO MEET CITY'S APPROVAL PRIOR TO INSTALLATION. NO STEPS ARE REQUIRED.
D. RPZ SHALL BE INSTALLED ABOVE GRADE OR INSIDE BUILDING. RPZ MUST BE APPROVED MODEL BY OHIO EPA AND MIAMI COUNTY BUILDING DEPARTMENT.
E. ALL PRESSURE AND BACTERIA TESTING BY CITY OF TROY UTILITIES DEPARTMENT.
F. SMALLER PIPE SHALL BE "K" COPPER WITH FLARED OR COMPRESSION FITTINGS.
G. SUMP PUMP PIT IS TO BE CONNECTED TO A STORM OUTLET.
H. IF 6" METER OR LARGER, PROVIDE A 4'x4' BILCO LID.

CITY OF TROY	1 1/2" AND GREATER METER PIT DETAIL	REVISIONS: OCT 2018	DATE APPROVED: NOV 2017 PAGE No. 800-8

ChoiceOne Engineering

CALCULATED ATW
CHECKED JDH

WATER WORK NOTES

MIA-41-09.49

S:\CIN\4300-4399\4354\004\Drawings\CAD\108662\roadway\sheets\08662WN002.dgn Sheet 2/2/2022 11:39:06 AM Allisonw

WATER SERVICE REPLACED CONNECTIONS

THE FOLLOWING ADDRESSES WILL HAVE NEW WATER SERVICES INSTALLED AS PART OF THIS PROJECT. NEW SERVICE LINE SHALL BE K-COPPER RUN FROM THE EXISTING MAIN PARALLEL TO THE EXISTING SERVICE LINE. A NEW CORP STOP AND SERVICE BOX SHALL BE INSTALLED AS SHOWN ON THE PLANS AND SHALL CONFORM TO ODOT SPEC 638 AND CITY OF TROY CONSTRUCTION STANDARD -800 WATER, LATEST EDITION.

STA.	PARCEL ID	PIPE LENGTH (FT)	DIAMETER (IN)
484+09	D08-095860	48	1
484+82	D08-095840	49	1
487+19	D08-029960	23	1
487+58	D08-029950	20	1
488+40	D08-029940	20	1
* 506+72	PUBLIC R/W	16	2

* = NEW SERVICE LOCATION, NOT REPLACEMENT

THESE LOCATIONS ARE ALSO REPRESENTED IN THE ROADWAY PLAN AND PROFILE SHEETS.

THE FOLLOWING QUANTITIES HAVE BEEN CARRIED TO THE GENERAL SUMMARY:

ITEM 638: ITEM 638: WATER WORK, MISC.: COPPER WATER SERVICE LINE* 176 FT
ITEM 638: WATER WORK, MISC: CORPORATION STOP 6 EA
ITEM 638: SPECIAL - SERVICE BOX 6 EA
ITEM 638: METER, SETTING, STOP, AND CHAMBER, AS PER PLAN 1 EA

PROPOSED FIRE HYDRANT WORK

FIRE HYDRANT WORK SHALL BE INSTALLED AS SHOWN ON THE PLANS AND SHALL CONFORM TO ODOT SPEC 638 AND CITY OF TROY CONSTRUCTION STANDARDS -800 WATER, LATEST EDITION. THE FOLLOWING QUANTITIES HAVE BEEN ESTIMATED AND CARRIED TO THE GENERAL SUMMARY FOR THE PROPOSED HYDRANT REMOVAL AND INSTALLATION AT APPROX. STA. 499+27, STA. 503+70, AND STA. 507+90:

ITEM 638: FIRE HYDRANT REMOVED 3 EA
ITEM 638: SPECIAL - 6" FIRE HYDRANT 3 EA
ITEM 638: 6" WATER MAIN DUCTILE IRON PIPE ANSI CLASS 52, PUSH-ON JOINTS AND FITTINGS, AS PER PLAN 23 FT
ITEM 638: 6" GATE VALVE AND VALVE BOX, AS PER PLAN 2 EA

THE FOLLOWING QUANTITIES HAVE BEEN ESTIMATED AND CARRIED TO THE GENERAL SUMMARY FOR ALL REMAINING FIRE HYDRANT WORK:

ITEM 638: 6" WATER MAIN DUCTILE IRON PIPE ANSI CLASS 52, PUSH-ON JOINTS AND FITTINGS, AS PER PLAN 4 FT
ITEM 638: FIRE HYDRANT EXTENDED AND ADJUSTED TO GRADE 6 EA

WATER MAIN AND SERVICE RELOCATION DUE TO STORM SEWER

WATER MAIN AND SERVICE WORK SHALL BE INSTALLED AS SHOWN ON THE PLANS AND SHALL CONFORM TO ODOT SPEC 638 AND CITY OF TROY CONSTRUCTION STANDARDS -800 WATER, LATEST EDITION. THE FOLLOWING QUANTITIES HAVE BEEN ESTIMATED AND CARRIED TO THE GENERAL SUMMARY FOR WATER MAIN AND SERVICE RELOCATION AT APPROXIMATELY STA. 483+90, STA. 483+82, STA. 517+60, STA. 517+80, AND STA. 524+20:

ITEM 638: 6" WATER MAIN DUCTILE IRON PIPE ANSI CLASS 52, PUSH-ON JOINTS AND FITTINGS, AS PER PLAN 158 FT
ITEM 638: 12" WATER MAIN DUCTILE IRON PIPE ANSI CLASS 52, PUSH-ON JOINTS AND FITTINGS, AS PER PLAN 38 FT
ITEM 638: WATER WORK, MISC.: COPPER WATER SERVICE LINE* 350 FT

*SERVICE RELOCATIONS NOT SHOWN ON DRAWINGS. CONTRACTOR TO FIELD VERIFY.

PAVEMENT RESTORATION FOR PIPE INSTALLATIONS AND/OR REMOVALS

SEE SHEET 10.

EX. WATER METER (TO BE RELOCATED)

WATER METER WORK SHALL BE INSTALLED AS SHOWN ON THE PLANS AND SHALL CONFORM TO ODOT SPEC 638 AND CITY OF TROY CONSTRUCTION STANDARDS -800 WATER, LATEST EDITION. THE FOLLOWING TABLE IDENTIFIES LOCATIONS WHERE WATER METERS WILL HAVE TO BE RELOCATED DUE TO PROPOSED CURB PLACEMENT. THE CONTRACTOR IS TO INSTALL A JOINT WITHIN 1 FT OF THE EXISTING STRUCTURE LOCATION, INSTALL SERVICE CONDUIT, AND PLACE THE RELOCATED STRUCTURE WITHIN THE PROPOSED TREE LAWN. THE STRUCTURE SHALL BE PLACED NO LESS THAN 18" BEHIND BACK OF CURB.

STA	LT/RT
484+82	LT
486+39	RT
489+41	RT
490+10	RT
490+67	RT
490+78	RT
493+99	RT
495+57	LT
496+31	LT
499+74	RT
501+16	RT
501+90	LT
502+53	RT
502+61	RT
512+67	RT

THESE LOCATIONS ARE ALSO REPRESENTED IN THE ROADWAY PLAN AND PROFILE SHEETS.

THE FOLLOWING QUANTITIES HAVE BEEN CARRIED TO THE GENERAL SUMMARY:

ITEM 638: METER AND CHAMBER REMOVED AND RESET, AS PER PLAN 15 EA

ITEM 202 - VALVE BOX AND SERVICE BOX REMOVED

VALVE BOX AND SERVICE BOX REMOVED SHALL BE INSTALLED AS SHOWN ON THE PLANS AND SHALL CONFORM TO ODOT SPEC 638 AND CITY OF TROY CONSTRUCTION STANDARDS -800 WATER, LATEST EDITION. THE FOLLOWING TABLE IDENTIFIES LOCATIONS WHERE WATER VALVES WILL HAVE TO BE REMOVED DUE TO PROPOSED CONDITIONS. CONTRACTOR SHALL REMOVE VALVE BOX OR SERVICE BOX AS SHOWN IN THE PLANS AND RETURN THE VALVE BOX OR SERVICE BOX TO THE UTILITY OWNER. ABANDONED VALVE IS TO REMAIN IN PLACE BELOW GROUND SURFACE. CONTRACTOR SHALL DELIVER SALVAGED ITEMS TO OWNER.

STA	LT/RT	REASON FOR REMOVAL	BOX TYPE
485+50	LT	CURB CONFLICT	SERVICE BOX
485+91	RT	CURB CONFLICT	SERVICE BOX
488+85	RT	CURB CONFLICT	SERVICE BOX
488+99	LT	CURB CONFLICT	SERVICE BOX
502+61	RT	CURB CONFLICT	SERVICE BOX
503+99	RT	STORM SEWER CONFLICT	VALVE BOX
508+56	RT	CURB CONFLICT	SERVICE BOX
510+27	RT	RETIRED SERVICE	SERVICE BOX
512+23	LT	STORM SEWER CONFLICT	SERVICE BOX
513+33	RT	CURB CONFLICT	SERVICE BOX
525+40	LT	STORM SEWER CONFLICT	SERVICE BOX

THESE LOCATIONS ARE ALSO REPRESENTED IN THE ROADWAY PLAN AND PROFILE SHEETS.

THIS ITEM DOES NOT INCLUDE WORK FOR REPLACING THE PROPERTY OWNER'S CURB STOP. THE WORK FOR REPLACEMENT IS TO BE PERFORMED BY THE CITY PRIOR TO CONSTRUCTION. THE FOLLOWING QUANTITIES HAVE BEEN CARRIED TO THE GENERAL SUMMARY:

ITEM 202 - VALVE BOX REMOVED, AS PER PLAN 1 EA
ITEM 202 - REMOVAL MISC.: SERVICE BOX REMOVED 10 EA

CALCULATED ATW
CHECKED JDH

WATER WORK NOTES

MIA-41-09.49

S:\CIN\4300-4399\4354\004\Drawings\CAD\108662\roadway\sheets\08662WN003.dgn Sheet 2/2/2022 11:39:30 AM Allisonw

SHEET NO.	STATION TO STATION			611 MANHOLE ADJUSTED TO GRADE	611 MANHOLE RECONSTRUCTED TO GRADE	611 CATCH BASIN ADJUSTED TO GRADE	611 MANHOLE, MISC.:TELE MANHOLE ADJUSTED TO GRADE	611 MANHOLE, MISC.: PULL BOX ADJUSTED TO GRADE	611 MANHOLE, MISC.: SPRINKLER CONTROL ADJUSTED TO GRADE	611 SPECIAL - GAS VALVE BOX ADJUSTED TO GRADE	638 VALVE BOX ADJUSTED TO GRADE	638 WATER WORK, MISC.: WATER MANHOLE ADJUSTED TO GRADE
				EACH	EACH	EACH	EACH	EACH	EACH	EACH	EACH	EACH
47	481+50	TO	487+00	3			1	1		6	1	4
48	487+00	TO	491+98	1			1			2	1	1
49	492+00	TO	497+00	6	1		1			4		1
50	497+00	TO	502+00	1			1			6		1
51	502+00	TO	507+00	4	1		1			5	2	
52	507+00	TO	512+00	1					1	5	2	1
53	512+00	TO	517+00	4			1			2	2	1
54	517+00	TO	522+00	3			1			4	6	
55	522+00	TO	527+00	8		1		3		5		2
56	527+00	TO	528+94.31	2								
TOTALS CARRIED TO GENERAL SUMMARY				33	2	1	7	4	1	39	14	11

CALCULATED ATW
CHECKED JDH

OTHER UTILITIES SUBSUMMARY

MIA-41-09.49

S:\CIN\4300--4399\4354\004\Drawings\CAD\108662\roadway\sheets\08662US001.dgn Sheet 2/2/2022 11:39:30 AM Allisonw

SHEET NO.	REFERENCE NO.	LOCATION	STATION FROM	STATION TO	SIDE	644 EDGE LINE, 4" (WHITE) MILE	644 EDGE LINE, 4" (YELLOW) MILE	644 LANE LINE, 4" MILE	644 CENTER LINE MILE
142	ELWIA		481+40	481+90	LT	0.010			
146	ELW1		528+07	528+84	RT	0.016			
146	ELW2		528+07	528+85	LT	0.017			
144	ELY1		505+35	510+94	LT		0.106		
144	ELY2		505+35	510+94	LT		0.112		
142	LL1		481+40	483+01	LT			0.031	
142	LL2		481+40	483+17	RT			0.036	
142	LL3		484+22	492+30	LT			0.154	
142	LL4		484+35	492+50	RT			0.157	
143	LL5		492+46	498+84	LT			0.121	
143	LL6		492+75	498+84	RT			0.116	
143	LL7		499+34	503+46	LT			0.077	
143	LL8		499+34	503+64	RT			0.081	
144	LL9		504+48	511+13	LT			0.126	
144	LL10		511+89	514+10	LT			0.042	
145	LL11		514+87	517+08	LT			0.042	
146	LL12		526+81	527+39	RT			0.011	
142	CL1		486+04	491+70	LT				0.108
142	CL2		486+04	491+70	RT				0.108
143	CL3		493+67	497+59	LT				0.075
143	CL4		493+74	497+59	RT				0.073
143	CL5		500+59	502+04	LT				0.028
143	CL6		500+59	502+04	RT				0.028
142	DY1		481+50	482+00	RT				0.010
142	DY2		481+50	483+08	LT				0.030
142	DY3		483+23	483+36	LT				0.007
142	DY4		484+05	484+12	RT				0.003
142	DY5		484+29	486+04	RT				0.034
142	DY6		485+54	486+04	LT				0.010
143	DY7		492+27	492+50	RT				0.005
143	DY8		492+59	493+11	LT				0.010
143	DY9		497+59	498+84	LT				0.024
143	DY10		497+59	498+09	RT				0.010
143	DY11		499+34	500+59	RT				0.024
143	DY12		500+15	500+59	LT				0.010
144	DY13		502+04	503+55	LT				0.029
144	DY14		502+04	502+54	RT				0.010
144	DY15		503+62	503+70	LT				0.004
144	DY16		504+35	504+40	RT				0.002
144	DY17		504+61	505+35	RT				0.016
144	DY18		504+96	505+35	RT				0.008
144	DY19		511+47		RT				0.002
144	DY20		511+55		LT				0.026
144	DY21		511+89	514+10	RT				0.043
145	DY22		514+87	517+08	RT				0.043
145	DY23		517+82	520+09	RT				0.044
145	DY24		520+83	523+06	RT				0.042
145	DY25		521+78	523+06	RT				0.026
146	DY26		523+83	526+04	RT				0.043
146	DY27		526+81	527+99	RT				0.023
146	DY28		527+53	527+99	LT				0.010
146	DY29		528+07	528+85	RT				0.015
146	DY30		528+07	528+86	LT				0.016
146	DY31		528+82	528+86	LT/RT				0.009
147	DY32		100+58	102+30	RT				0.033
TOTALS CARRIED TO GENERAL SUMMARY						0.043	0.218	0.994	1.041

SHEET NO.	REFERENCE NO.	LOCATION	STATION FROM	STATION TO	SIDE	644 CHANNELIZING LINE, 8" FT	644 STOP LINE FT	644 CROSSWALK LINE FT	644 TRANSVERSE/DIAGONAL LINE FT
142	CH1		482+00	483+17	RT	117			
142	CH2		483+14	483+20	LT	15			
142	CH3		484+16	484+22	RT	16			
142	CH4		484+22	485+54	LT	132			
143	CH5		492+27	492+39	LT	12			
143	CH6		492+77	493+11	RT	34			
143	CH7		498+09	498+84	RT	75			
143	CH8		499+34	500+15	LT	75			
144	CH9		502+55	503+55	RT	100			
144	CH10		502+55	503+64	RT	109			
144	CH11		503+53	503+64	LT	23			
144	CH12		504+46	504+50	RT	14			
144	CH13		504+38	507+00	LT	262			
144	CH14		504+38	506+75	LT	237			
144	CH15		504+49	506+54	LT	205			
144	CH16		504+49	505+60	LT	112			
144	CH17		507+21	511+13	RT	392			
144	CH18		509+62	511+13	RT	151			
144	CH19		511+60		RT	8			
144	CH20		511+89	512+77	LT	88			
144	CH21		511+89	512+77	CL	88			
145	CH22		513+27	514+10	RT	84			
145	CH23		514+87	515+71	CL	84			
145	CH24		516+21	517+08	RT	88			
145	CH25		517+82	518+72	CL	90			
145	CH26		519+22	520+09	RT	87			
145	CH27		520+83	521+78	CL	95			
146	CH28		523+83	524+72	CL	89			
146	CH29		525+22	526+04	RT	82			
146	CH30		526+81	527+53	LT	72			
146	CH31		527+39	527+99	RT	60			
146	CH32		528+07	528+94	RT	89			
147	CH33		100+31	101+47	LT	119			
147	CH34		100+31	101+78	LT	148			
147	CH35		100+52	102+60	LT	508			
142	SL1		483+08		LT/RT		12		
142	SL2		483+17		RT		22		
142	SL3		483+05	483+30	LT		27		
142	SL4		484+05	484+29	RT		26		
142	SL5		484+22		LT		22		
142	SL6		484+29		LT/RT		11		
143	SL7		492+09	492+30	RT		22		
143	SL8		492+98	493+12	LT		14		
143	SL9		499+09	499+23	RT		14		
144	SL10		503+55		LT/RT		12		
144	SL11		503+64		RT		22		
144	SL12		503+47	503+64	LT		20		
144	SL13		503+61	503+70	LT		11		
144	SL14		504+35	504+54	RT		28		
144	SL15	NOT USED							
144	SL16		504+38		LT		11		
144	SL17		504+49		LT		22		
144	SL18		504+61		LT/RT		12		
144	SL19		511+13		RT		35		
144	SL20		511+47	511+71	RT		24		
144	SL21		511+89		LT		45		
145	SL22		514+47	514+67	RT		20		
145	SL23		517+08		RT		26		
145	SL24		517+30	517+46	LT		18		
TOTALS CARRIED TO GENERAL SUMMARY						3960	476		

CALCULATED CJR
CHECKED JCH

PAVEMENT MARKING SUBSUMMARY

MIA-41-09.49

S:\CIN\4300--4399\4354\004\Drawings\CAD\108662\traffic\sheets\086621S001.dgn Sheet 2/2/2022 11:40:05 AM Allisonw

SHEET NO.	REFERENCE NO.	LOCATION	STATION FROM	STATION TO	SIDE	644 STOP LINE	644 CROSSWALK LINE	644 TRANSVERSE/DIAGONAL LINE	644 CHEVRON MARKING
						FT	FT	FT	FT
145	SL25		517+46		RT	18			
145	SL26		517+82		LT/RT	38			
145	SL27	NOT USED							
146	SL28		523+03		RT	13			
146	SL29		523+83		LT/RT	27			
147	SL30		100+52		LT	18			
147	SL31		100+52		LT	11			
147	SL32		100+58		LT/RT	11			
142	CR1		482+89	483+49	LT/RT		159		
142	CR2		482+96	483+92	LT		164		
142	CR3		483+77	484+35	RT		102		
142	CR4		483+94	484+35	LT/RT		150		
142	CR5		491+78	492+38	RT		107		
143	CR6		492+96	493+43	LT		81		
143	CR7		498+84	499+25	LT		61		
143	CR8		498+93	499+26	RT		60		
144	CR9		503+38	504+02	RT		173		
144	CR10		503+47	504+04	LT		108		
144	CR11		504+02	504+55	RT		96		
144	CR12		504+13	504+61	LT/RT		180		
144	CR13		510+77	511+14	LT		60		
144	CR14		511+19	511+29	LT/RT		135		
144	CR15		511+29	511+75	RT		88		
144	CR16		511+34	511+69	LT		69		
144	CR17		511+75	511+85	LT/RT		129		
145	CR18		514+29	514+67	LT		76		
145	CR19		514+29	514+67	RT		76		
145	CR20	NOT USED							
145	CR21		517+12	517+20	LT/RT		104		
145	CR22		517+30	517+62	LT		66		
145	CR23		517+33	517+62	RT		66		
145	CR24		517+70	517+78	LT/RT		106		
145	CR25		520+28	520+62	LT		69		
145	CR26		520+28	520+62	RT		69		
146	CR27		523+07	523+15	LT/RT		83		
146	CR28		523+22	523+68	RT		83		
146	CR29		523+71	523+79	LT/RT		81		
146	CR30		526+26	526+56	LT		60		
146	CR31		526+26	526+55	RT		58		
146	CR32		527+99	528+08	LT/RT		102		
146	TL1		528+07	528+86	LT/RT			213	
144	CV1		504+38	506+75	LT				40
144	CV2		504+49	505+60	LT				19
144	CV3		511+89	512+77	LT				13
TOTALS CARRIED TO GENERAL SUMMARY						136	3021	213	72

SHEET NO.	REFERENCE NO.	LOCATION	STATION FROM	STATION TO	SIDE	644 RAILROAD SYMBOL MARKING	644 PARKING LOT STALL MARKING	644 LANE ARROW	644 DOTTED LINE, 4"
						EACH	FT	EACH	FT
142	RR1		487+95		RT	1			
142	RR2		487+95		RT	1			
143	RR3		496+19		LT	1			
143	RR4		496+19		LT	1			
145	PS1		512+26	513+34	RT		88		
145	PS2		512+63	513+91	LT		80		
145	PS3		515+00	515+40	RT		32		
145	PS4		514+98	516+82	LT		104		
145	PS5		516+50	516+90	RT		32		
145	PS6		518+05	519+93	LT		307		
145	PS7		518+04	519+88	RT		104		
145	PS8		520+98	522+34	RT		80		
145	PS9		521+09	522+96	LT		255		
146	PS10		524+08	525+80	RT		104		
146	PS11		524+01	526+01	LT		428		
146	PS12		526+88	527+72	LT		176		
146	PS13		526+98	527+82	RT		56		
142	AR1		482+19		CL			1	
142	AR2		482+94		CL			1	
142	AR3		483+21		CL			1	
142	AR4		483+11		CL			1	
142	AR5		484+11		CL			1	
142	AR6		484+36		CL			1	
142	AR7		484+88		CL			1	
142	AR8		485+45		CL			1	
142	AR9		486+45		CL			2	
142	AR10		491+33		CL			2	
143	AR11		492+30		CL			1	
143	AR12		493+02		CL			1	
143	AR13		493+94		CL			2	
143	AR14		497+16		CL			2	
143	AR15		498+24		CL			1	
143	AR16		498+74		CL			1	
143	AR17		499+44		CL			1	
143	AR18		499+94		CL			1	
143	AR19		501+32		CL			2	
144	AR20		502+79		CL			1	
144	AR21		503+49		CL			1	
144	AR22		504+43		CL			1	
144	AR23		504+68		CL			1	
144	AR24		505+07		CL			1	
144	AR25		505+41		LT			1	
144	AR26		505+75		LT			1	
144	AR27		506+32		LT			1	
144	AR28		506+39		LT			1	
144	AR29		507+73		RT			1	
144	AR30		508+39		RT			1	
144	AR31		509+07		RT			1	
144	AR32		509+71		RT			1	
144	AR33		510+39		RT			1	
144	AR34		509+71		RT			1	
144	AR34A		510+39		RT			1	
144	AR35		511+03		RT			1	
144	AR36		511+03		RT			1	
145	AR37		511+99		RT			1	
145	AR38		512+59		RT			1	
145	AR39		513+44		RT			1	
TOTALS CARRIED TO GENERAL SUMMARY						4	1846	45	

CALCULATED CJR
CHECKED JCH

PAVEMENT MARKING SUBSUMMARY

MIA-41-09.49

S:\CIN\4300--4399\4354\004\Drawings\CAD\108662\traffic\sheets\08662TS002.dgn Sheet 2/2/2022 11:40:41 AM Allisonw

SHEET NO.	REFERENCE NO.	LOCATION	STATION FROM	STATION TO	SIDE	644 LANE ARROW EACH	644 DOTTED LINE, 4" FT	644 HANDICAP SYMBOL MARKING EACH	644 YIELD LINE FT
145	AR40		514+04		RT	1			
145	AR41		514+93		RT	1			
145	AR42		515+57		RT	1			
145	AR43		516+34		RT	1			
145	AR44		516+99		RT	1			
145	AR45		517+92		RT	1			
145	AR46		518+62		RT	1			
145	AR47		519+31		RT	1			
145	AR48		520+01		RT	1			
145	AR49		520+88		RT	1			
145	AR50		521+63		RT	1			
146	AR51		523+91		RT	1			
146	AR52		524+56		RT	1			
146	AR53		525+34		RT	1			
146	AR54		525+90		RT	1			
146	AR55		526+88		LT	1			
146	AR56		527+04		RT	1			
146	AR57		527+42		LT	1			
146	AR58		527+69		RT	1			
147	AR59		100+65		LT	1			
147	AR60		101+63		LT	1			
147	AR61		100+64		RT	1			
147	AR62		101+23		RT	1			
147	AR63		101+87		RT	1			
144	DL1		504+60	509+62	RT		503		
146	HS1		524+24		LT			1	
146	HS2		524+45		LT			1	
146	HS3		525+87		LT			1	
146	YL1		528+69	528+74	RT				16
146	YL2		528+80	528+88	RT				15
TOTALS CARRIED TO GENERAL SUMMARY						24	503	3	31

CALCULATED CJR
CHECKED JCH

PAVEMENT MARKING SUBSUMMARY

MIA-41-09.49

S:\CIN\4300-4399\4354\004\Drawings\CAD\108662\traffic\sheets\086621S003.dgn Sheet 2/2/2022 11:41:14 AM Allisonw

SHEET NO.	REFERENCE NO.	LOCATION	STATION	SIDE	CODE	SIZE (INCHES)	630 SIGN, FLAT SHEET	GROUND MOUNTED SIGN SUPPORT, NO. 3 POST	GROUND MOUNTED WOODEN BOX BEAM SUPPORT, TYPE M BEAM	SIGN POST REFLECTOR	REMOVAL OF GROUND MOUNTED SIGN AND DISPOSAL	REMOVAL OF GROUND MOUNTED SIGN AND REERECTION	REMOVAL OF GROUND MOUNTED POST SUPPORT AND DISPOSAL	REMOVAL OF OVERHEAD MOUNTED SIGN AND DISPOSAL	REMOVAL OF POLE MOUNTED SIGN AND DISPOSAL	REMOVAL OF POLE MOUNTED SIGN AND REERECTION	SIGN SUPPORT ASSEMBLY, POLE MOUNTED		
							SQ FT	FT	FT	EACH	EACH	EACH	EACH	EACH	EACH	EACH	EACH		
148	R-1	CL W. MAIN ST.									1		2						
148	R-1A										1		2						
148	R-2										1		2						
148	R-3														2				
148	R-4										1		1						
148	R-5										2		1						
148	R-6										3		1						
148	R-7										2		1						
148	R-8										1		1						
148	R-9										2		1						
149	R-9A											1							
149	R-10										1		1						
149	R-11														1				
149	R-12														2				
149	R-13										2		1						
150	R-14										1		2						
151	R-15														2				
151	R-16										2		1						
151	R-17										1		1						
151	R-18										1		1						
151	R-19										1		1						
151	R-20														3				
151	R-21											1							
151	R-22											1							
151	R-23														1				
151	R-24										3		1						
151	R-25										1		1						
151	R-26										1		1						
151	R-27														1				
151	R-28										1		1						
151	R-29										1		1						
151	R-30										1		1						
151	R-31														3				
151	R-32										1		1						
151	R-33										1		1						
151	R-34														1				
151	R-35										1		1						
151	R-36										2		2						
151	R-37														2				
151	R-38										1		1						
151	R-39										1		1						
151	R-40										1		1						
151	R-41										1		1						
151	R-42										1		1						
151	R-43										1		1						
151	R-44										1		1						
151	R-45										1		1						
151	R-46														2				
151	R-47										1		1						
151	R-48										1		1						
151	R-49										1		1						
151	R-50										1		1						
151	R-51										2		1						
151	R-52													2					
151	R-53										2		1						
151	R-54										1		1						
151	R-55	CL N. ADAMS ST.									1		1						
151	R-56															1			
151	R-57										1		1						
		TOTALS CARRIED TO GENERAL SUMMARY									55	3	48	2	20	1			

CALCULATED CJR
CHECKED JCH

SIGNING SUBSUMMARY

MIA-41-09.49

S:\CIN\4300--4399\4354\004\Drawings\CAD\108662\traffic\sheets\08662TS004.dgn Sheet 2/2/2022 11:41:15 AM Alisonw

SHEET NO.	REFERENCE NO.	LOCATION	STATION	SIDE	CODE	SIZE (INCHES)	SIGN, FLAT SHEET	GROUND MOUNTED SIGN SUPPORT, NO. 3 POST	GROUND MOUNTED WOODEN BOX BEAM SUPPORT, TYPE M BEAM	SIGN POST REFLECTOR	REMOVAL OF GROUND MOUNTED SIGN AND DISPOSAL	REMOVAL OF GROUND MOUNTED SIGN AND REERECTION	REMOVAL OF GROUND MOUNTED POST SUPPORT AND DISPOSAL	REMOVAL OF OVERHEAD MOUNTED SIGN AND DISPOSAL	REMOVAL OF POLE MOUNTED SIGN AND DISPOSAL	REMOVAL OF POLE MOUNTED SIGN AND REERECTION	SIGN SUPPORT ASSEMBLY, POLE MOUNTED		
							630												
							SQ FT	FT	FT	EACH	EACH	EACH	EACH	EACH	EACH	EACH	EACH		
148	S-1	CL W. MAIN ST.	481+72	RT	R3-H8CG-48	48" x 30"	10.0	26.0											
148	S-2		482+93	LT	R3-H8BJ-36	36" x 30"	7.5	26.0											
148	S-3		484+31	LT	R3-H8CG-48	48" x 30"	10.0	26.0											
148	S-4		485+45	RT	D9-2-24	24" x 24"	6.2										2		
					M6-3-21	21" x 15"													
148	S-5		487+96	RT	W10-1-36	36" DIA.	7.1	13.5											
148	S-6		492+40	LT	R15-1-48	48" x 48"	12.9		20	1									
					R1-2-48	48" x 48"													
148	S-7		492+39	RT	D3-1-24	48" x 12"	8.0	15.2											
148	S-8		492+91	LT	D3-1-24	48" x 12"													
					D3-1-24	48" x 12"													
148	S-9		492+97	LT	R1-1-30	30" x 30"	6.3	13.0											
148	S-10		492+52	RT	R15-1-48	48" x 48"	12.9		20	1									
					R1-2-48	48" x 48"													
149	S-11		496+20	LT	W10-1-36	36" DIA.	7.1	13.5											
149	S-12		498+81	LT	R9-3-18	18" x 18"	2.3	12.0											
149	S-13		498+92	LT	R1-1-30	30" x 30"	14.3	15.2											
					D3-1-48	48" x 12"													
					D3-1-48	48" x 12"													
149	S-14		499+37	LT	R9-3-18	18" x 18"	2.3	12.0											
149	S-15		498+81	LT	R9-3-18	18" x 18"	2.3	12.0											
149	S-16		499+26	RT	R1-1-30	30" x 30"	6.3	13.0											
149	S-17		499+37	RT	R9-3-18	18" x 18"	2.3	12.0											
149	S-18		502+45	RT	D9-2-24	24" x 24"	6.2	13.8								1			
					M6-1-21	21" x 15"													
					SPECIAL														
149	S-19		504+71	LT	D9-2-24	24" x 24"	6.2	13.8											
					M6-1-21	21" x 15"													
150	S-20		506+85	RT	R3-7-36	36" x 36"	9.0	13.5											
150	S-21		507+62	LT	R3-H8DA-54	30" x 54"	11.3	13.0											
150	S-22		509+18	RT	W11-1-36	36" x 36"	12.0	15.6											
					W16-1P-18	18" x 24"													
150	S-23		511+00	RT	SPECIAL			13.5				1							
150	S-24		511+96	LT	SPECIAL			13.5				1							
150	S-24A		514+25	LT	D3-1-48	30" x 30"	14.3	15.2											
					D3-1-48	48" x 12"													
					R1-1-30	48" x 12"													
150	S-24B		514+71	RT	D3-1-48	30" x 30"	14.3	15.2											
					D3-1-48	48" x 12"													
					R1-1-30	48" x 12"													
151	S-25		516+16	RT	SPECIAL			15.5				2							
151	S-25A		517+23	LT	D3-1-48	30" x 30"	14.3	15.2											
					D3-1-48	48" x 12"													
					R1-1-30	48" x 12"													
151	S-25B		517+67	RT	D3-1-48	30" x 30"	14.3	15.2											
					D3-1-48	48" x 12"													
					R1-1-30	48" x 12"													
151	S-25C		518+12	LT	R7-108-12	12" x 18"	1.5	12.0											
151	S-26		518+96	LT	R7-108-12	12" x 18"	1.5	12.0											
151	S-27		519+56	LT	R7-108-12	12" x 18"	1.5	12.0											
151	S-28		520+22	LT	D3-1-48	48" x 12"	8.0	12.6											
					D3-1-48	48" x 12"													
151	S-29		521+17	LT	R7-108-12	12" x 18"	1.5	12.0											
151	S-30		518+22	RT	R7-108-12	12" x 18"	1.5	12.0											
151	S-31		518+94	RT	R7-108-12	12" x 18"	1.5	12.0											
151	S-32		519+44	RT	R7-108-12	12" x 18"	1.5	12.0											
151	S-33		519+96	LT	R2-1-30	30" x 36"	7.5	13.5											
151	S-34		517+69	RT	R1-1-30	30" x 30"	6.3	13.0											
151	S-35		520+72	RT	D3-1-48	48" x 12"	8.0	12.6											
					D3-1-48	48" x 12"													
TOTALS CARRIED TO GENERAL SUMMARY							259.3	517.9	40	2		4				1	2		

CALCULATED CJR
CHECKED JCH

SIGNING SUBSUMMARY

MIA-41-09.49

S:\CIN\4300-4399\4354\004\Drawings\CAD\108662\traffic\sheets\08662TS005.dgn Sheet 2/2/2022 11:41:15 AM Alisonw

SHEET NO.	REFERENCE NO.	LOCATION	STATION	SIDE	CODE	SIZE (INCHES)	630 SIGN, FLAT SHEET (SQ FT)	GROUND MOUNTED SIGN SUPPORT, NO. 3 POST (FT)	GROUND MOUNTED WOODEN BOX BEAM SUPPORT, TYPE M BEAM (FT)	SIGN POST REFLECTOR (EACH)	REMOVAL OF GROUND MOUNTED SIGN AND DISPOSAL (EACH)	REMOVAL OF GROUND MOUNTED SIGN AND REERECTION (EACH)	REMOVAL OF GROUND MOUNTED POST SUPPORT AND DISPOSAL (EACH)	REMOVAL OF OVERHEAD MOUNTED SIGN AND DISPOSAL (EACH)	REMOVAL OF POLE MOUNTED SIGN AND DISPOSAL (EACH)	REMOVAL OF POLE MOUNTED SIGN AND REERECTION (EACH)	SIGN SUPPORT ASSEMBLY, POLE MOUNTED (EACH)		
151	S-35A		521+18	RT	R7-108-12	12" x 18"	1.5	12.0											
151	S-36		521+61	LT	R7-108-12	12" x 18"	1.5	12.0											
151	S-37	CL W. MAIN ST.	522+51	LT	R7-108-12	12" x 18"	1.5	12.0											
151	S-38		524+15	LT	R7-8-24	12" x 18"	4.5	12.3											
					R7-8P-12	12" x 6"													
					R7-H8BP-12	12" x 6"													
					SPECIAL	24" x 12"													
151	S-39		524+36	LT	R7-8-24	12" x 18"	4.5	12.3											
					R7-8P-12	12" x 6"													
					R7-H8BP-12	12" x 6"													
					SPECIAL	24" x 12"													
151	S-40		525+00	LT	M3-1-24	24" x 12"	7.0	13.6											
					M1-5-24	30" x 24"													
151	S-41		525+10	LT	R7-108-12	12" x 18"	1.5	12.0											
151	S-42		525+52	LT	R7-108-12	12" x 18"	1.5	12.0											
151	S-43		525+78	LT	R7-8-24	12" x 18"	4.0	11.7											
					R7-H8BP-12	12" x 6"													
					SPECIAL	24" x 12"													
151	S-44		526+58	LT	R1-1-30	30" x 30"	8.3	14.1											
					W4-4P-24	24" x 12"													
151	S-45		521+66	RT	R7-108-12	12" x 18"	1.5	12.0											
151	S-46		522+33	RT	R7-108-12	12" x 18"	1.5	12.0											
151	S-47	NOT USED																	
151	S-48		523+70	RT	R7-108-12	12" x 18"	1.5	12.0											
151	S-49		524+28	RT	R7-108-12	12" x 18"	1.5	12.0											
151	S-50		524+72	RT	R7-108-12	12" x 18"	1.5	12.0											
151	S-51		525+38	RT	R7-108-12	12" x 18"	1.5	12.0											
151	S-52		525+53	RT	M2-1-21	21" x 15"	6.2	13.8											
					M1-4-24	24" x 24"													
151	S-53		525+80	RT	R7-108-12	12" x 18"	7.5	12.0											
151	S-54		526+58	RT	R1-1-30	30" x 30"	8.3	14.1											
					W4-4P-24	24" x 12"													
152	S-55		527+36	RT	R7-108-12	12" x 18"	1.5	12.0											
152	S-56		527+96	RT	W11-2-36	36" x 36"	11.0	14.6											
					W16-7PL-24	24" x 12"													
152	S-57		528+16	RT	R3-H8BJ-36	36" x 30"	7.5	26.0											
152	S-58		528+28	RT	M1-5-24	24" x 24"	6.2	13.8											
					M6-4-21	21" x 15"													
152	S-59		528+31	RT	R5-1-36	36" x 36"	9.0	13.5											
152	S-60		528+77	LT	R1-2-48	48" x 48"	16.0	29.0											
152	S-61	CL N. ADAMS ST.	101+35	LT	R7-1-12	12" x 18"	1.5	12.0											
152	S-62		102+25	LT	R7-1-12	12" x 18"	1.5	12.0											
TOTALS CARRIED TO GENERAL SUMMARY							120.9	368.7											

CALCULATED CJR
CHECKED JCH

SIGNING SUBSUMMARY

MIA-41-09.49

S:\CIN\4300--4399\4354\004\Drawings\CAD\108662\traffic\sheets\086621S006.dgn Sheet 2/2/2022 11:41:16 AM Allisonw

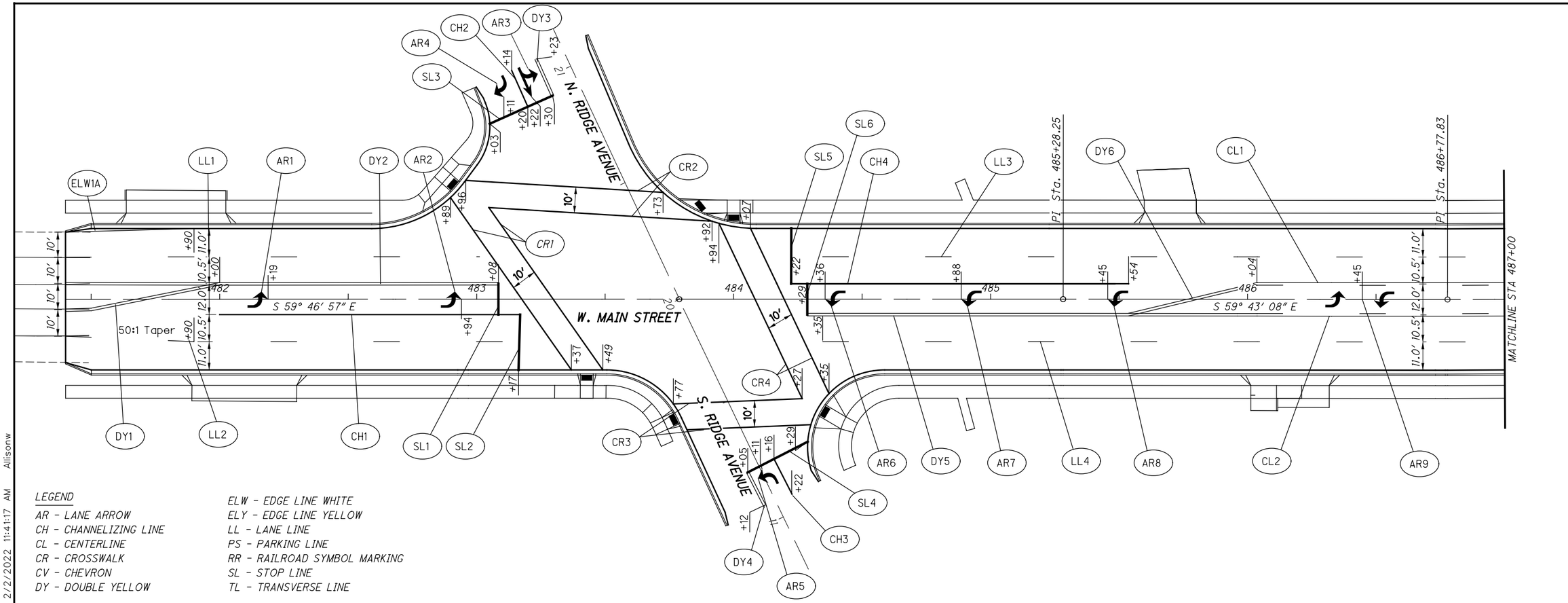

LEGEND

AR - LANE ARROW
CH - CHANNELIZING LINE
CL - CENTERLINE
CR - CROSSWALK
CV - CHEVRON
DY - DOUBLE YELLOW
ELW - EDGE LINE WHITE
ELY - EDGE LINE YELLOW
LL - LANE LINE
PS - PARKING LINE
RR - RAILROAD SYMBOL MARKING
SL - STOP LINE
TL - TRANSVERSE LINE

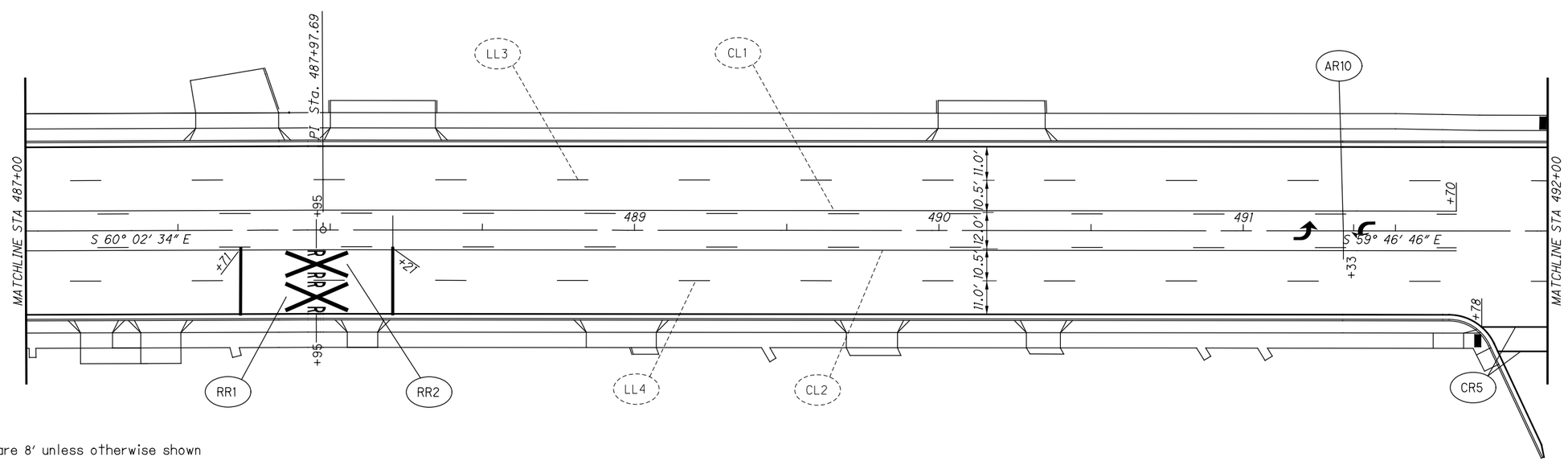

Note: Crosswalks are 8′ unless otherwise shown

HORIZONTAL SCALE IN FEET 0 10 20 40

CALCULATED ATW
CHECKED JDH

PAVEMENT MARKING PLAN
STA. 481+40.00 TO STA. 492+00.00

MIA-41-09.49

S:\CIN\4300--4399\4354\004\Drawings\CAD\108662\traffic\sheets\086621P001.dgn Sheet 2/2/2022 11:41:17 AM Allisonw

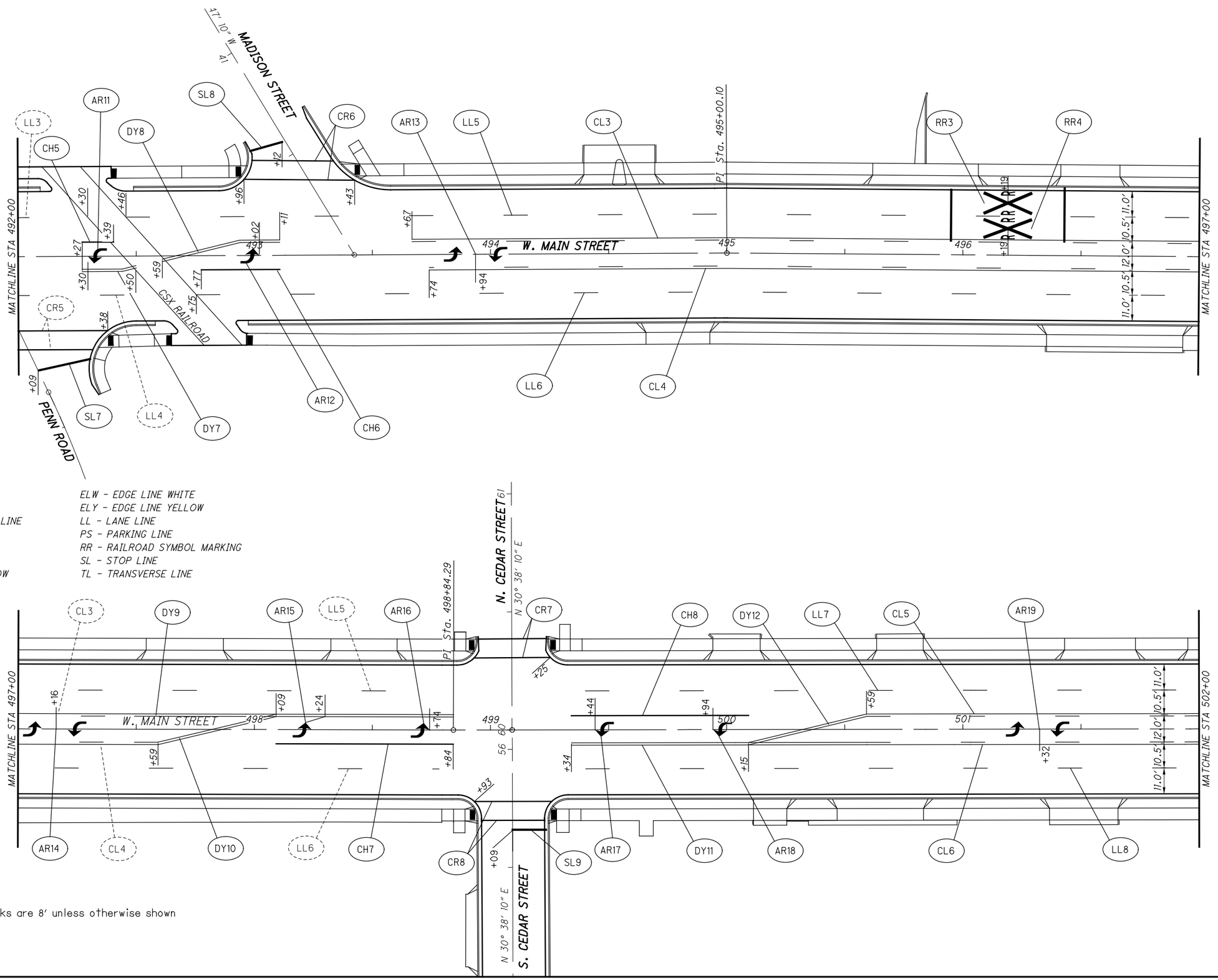

LEGEND

AR - LANE ARROW
CH - CHANNELIZING LINE
CL - CENTERLINE
CR - CROSSWALK
CV - CHEVRON
DY - DOUBLE YELLOW
ELW - EDGE LINE WHITE
ELY - EDGE LINE YELLOW
LL - LANE LINE
PS - PARKING LINE
RR - RAILROAD SYMBOL MARKING
SL - STOP LINE
TL - TRANSVERSE LINE

Note: Crosswalks are 8' unless otherwise shown

HORIZONTAL SCALE IN FEET 0 10 20 40

CALCULATED ATW
CHECKED JDH

PAVEMENT MARKING PLAN
STA. 492+00.00 TO STA. 502+00.00

MIA-41-09.49

S:\CIN\4300--4399\4354\004\Drawings\CAD\108662\traffic\sheets\08662TP002.dgn Sheet 2/2/2022 11:41:18 AM Alisonw

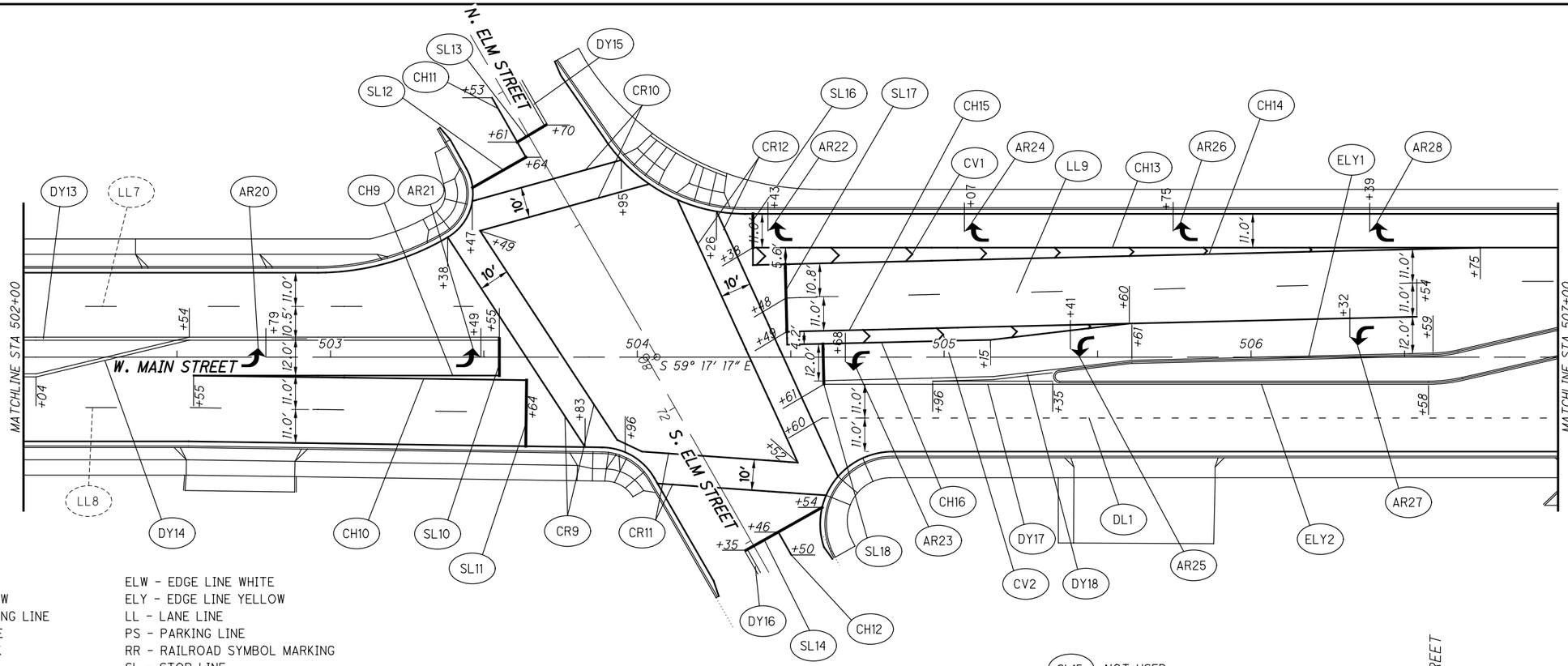

LEGEND

AR - LANE ARROW
CH - CHANNELIZING LINE
CL - CENTERLINE
CR - CROSSWALK
CV - CHEVRON
DY - DOUBLE YELLOW
DL - DOTTED LINE

ELW - EDGE LINE WHITE
ELY - EDGE LINE YELLOW
LL - LANE LINE
PS - PARKING LINE
RR - RAILROAD SYMBOL MARKING
SL - STOP LINE
TL - TRANSVERSE LINE
WP - WORD ON PAVEMENT

SL15 NOT USED

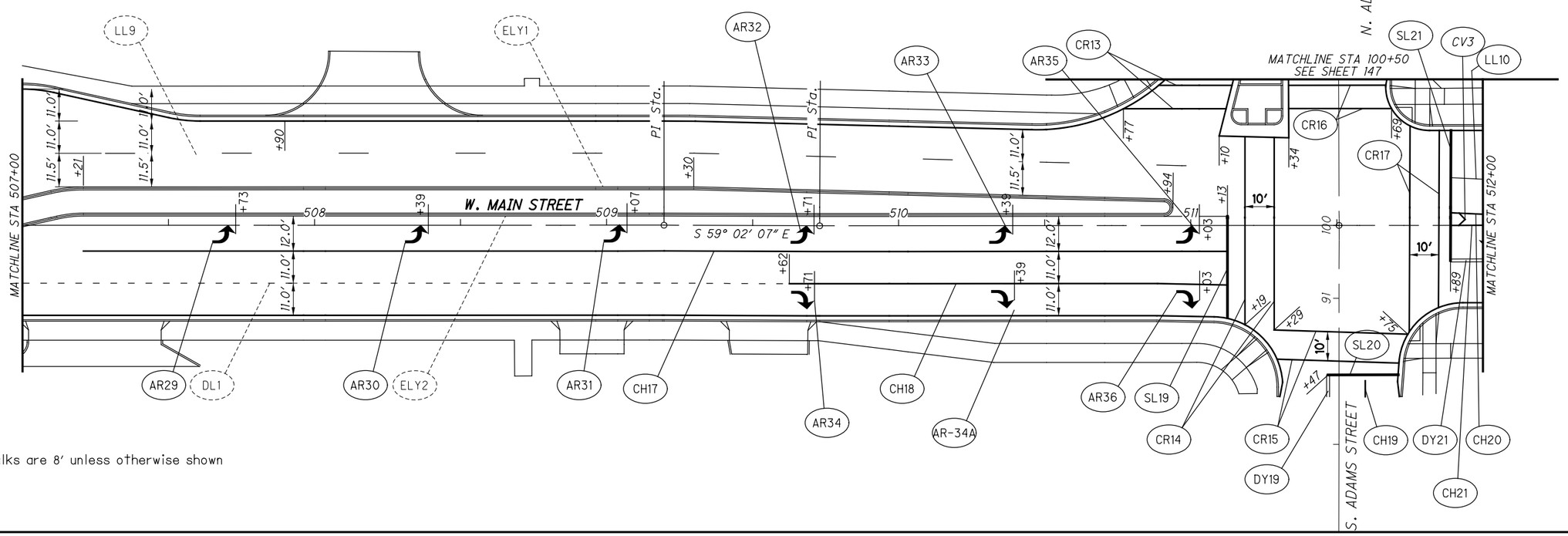

Note: Crosswalks are 8' unless otherwise shown

HORIZONTAL SCALE IN FEET 0 10 20 40

CALCULATED ATW
CHECKED JDH

PAVEMENT MARKING PLAN
STA. 502+00.00 TO STA. 512+00.00

MIA-41-09.49

S:\CIN\4300--4399\4354\004\Drawings\CAD\108662\traffic\sheets\08662TP003.dgn Sheet 2/2/2022 11:41:18 AM Alisonw

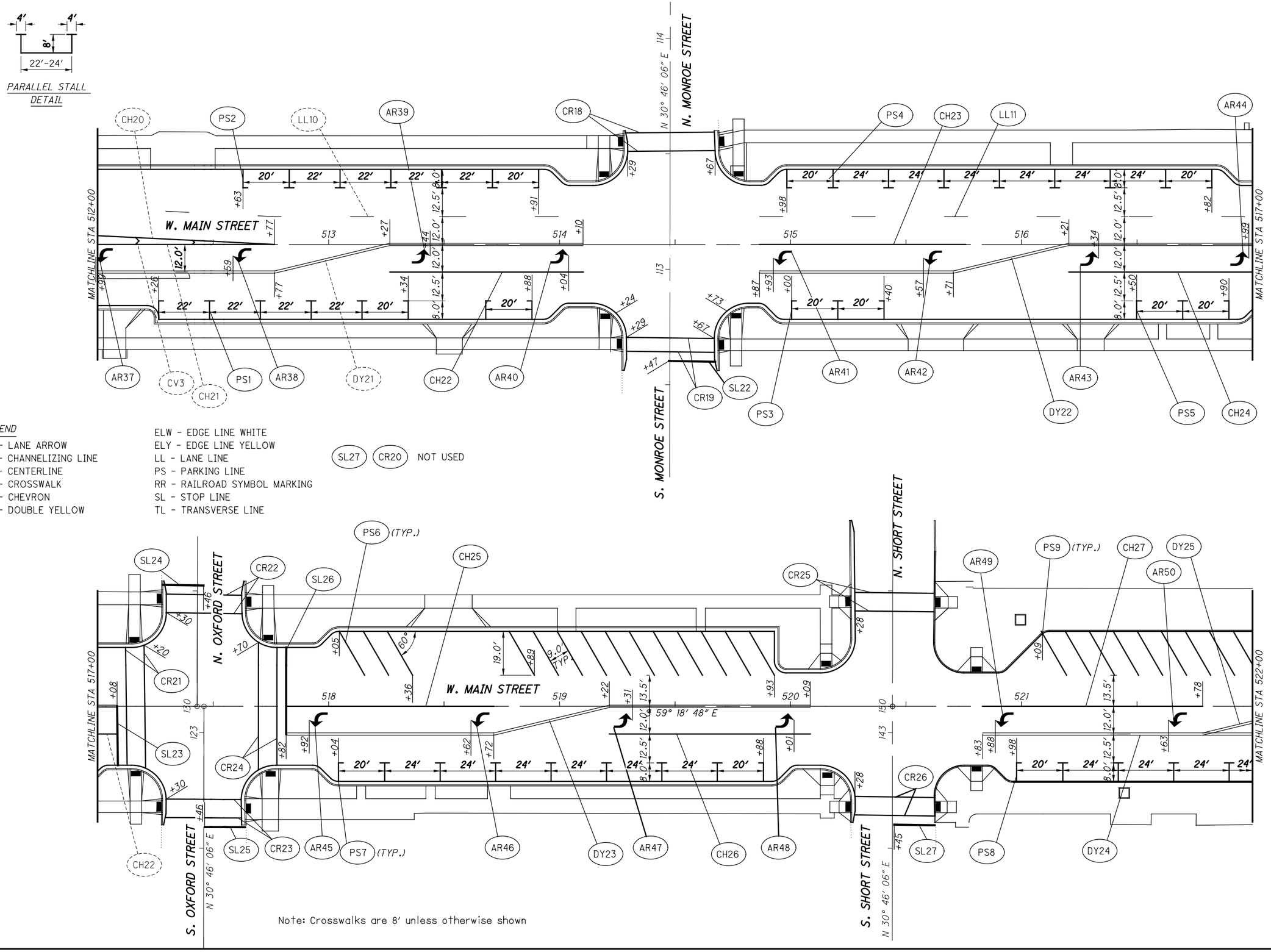

LEGEND

AR - LANE ARROW
CH - CHANNELIZING LINE
CL - CENTERLINE
CR - CROSSWALK
CV - CHEVRON
DY - DOUBLE YELLOW
ELW - EDGE LINE WHITE
ELY - EDGE LINE YELLOW
LL - LANE LINE
PS - PARKING LINE
RR - RAILROAD SYMBOL MARKING
SL - STOP LINE
TL - TRANSVERSE LINE

SL27 CR20 NOT USED

Note: Crosswalks are 8' unless otherwise shown

HORIZONTAL SCALE IN FEET 0 10 20 40

CALCULATED ATW
CHECKED JDH

PAVEMENT MARKING PLAN
STA. 512+00.00 TO STA. 522+00.00

MIA-41-09.49

S:\CIN\4300--4399\4354\004\Drawings\CAD\108662\traffic\sheets\08662TP004.dgn Sheet 2/2/2022 11:41:19 AM Alisonw

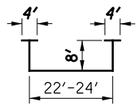

PARALLEL STALL DETAIL

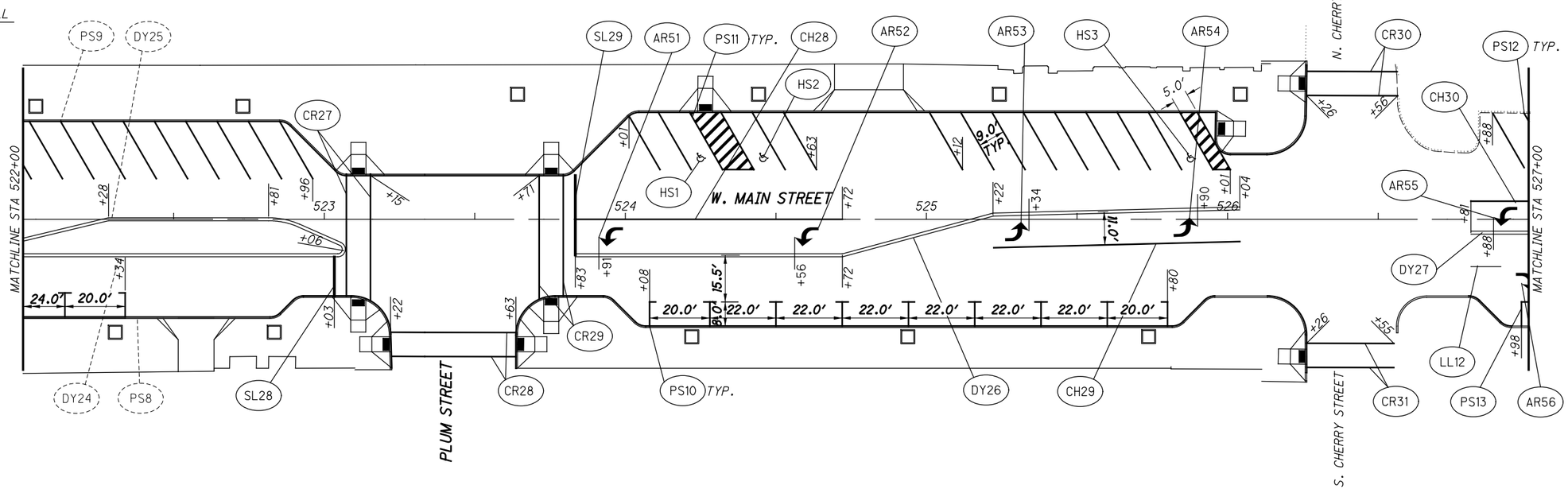

LEGEND

AR - LANE ARROW
CH - CHANNELIZING LINE
CL - CENTERLINE
CR - CROSSWALK
CV - CHEVRON
DY - DOUBLE YELLOW
HS - HANDICAP SYMBOL MARKING
ELW - EDGE LINE WHITE
ELY - EDGE LINE YELLOW
LL - LANE LINE
PS - PARKING LINE
RR - RAILROAD SYMBOL MARKING
SL - STOP LINE
TL - TRANSVERSE LINE
YL - YIELD LINE

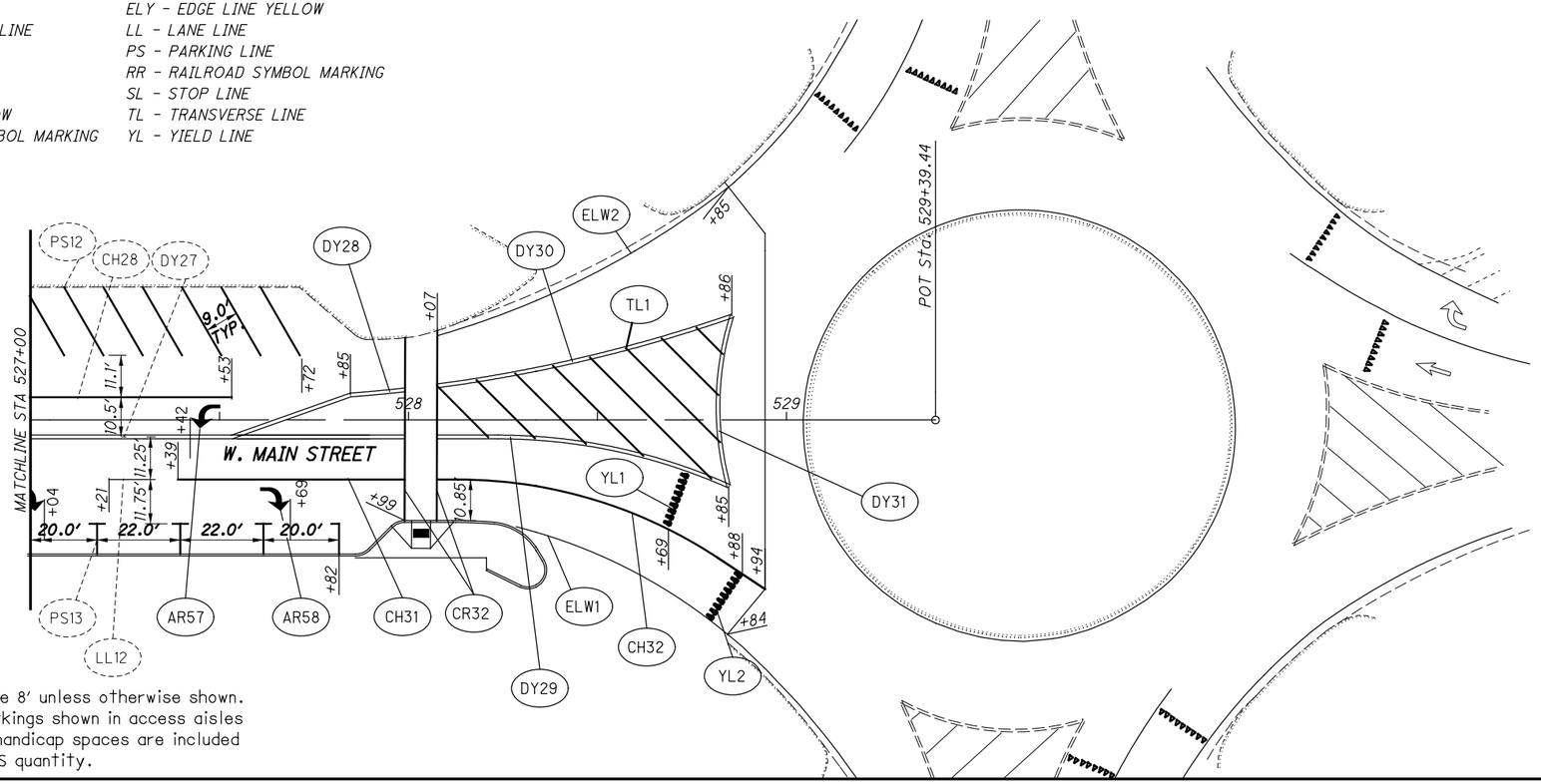

Notes:
1. Crosswalks are 8' unless otherwise shown.
2. Pavement markings shown in access aisles adjacent to handicap spaces are included in adjacent PS quantity.

HORIZONTAL SCALE IN FEET 0 10 20 40

CALCULATED ATW
CHECKED JDH

PAVEMENT MARKING PLAN
STA. 522+00.00 TO STA. 529+00.00

MIA-41-09.49

S:\CIN\4300--4399\4354\004\Drawings\CAD\108662\traffic\sheets\08662TP005.dgn Sheet 2/2/2022 11:41:20 AM Allisonw

LEGEND

AR - LANE ARROW
CH - CHANNELIZING LINE
CL - CENTERLINE
CR - CROSSWALK
CV - CHEVRON
DY - DOUBLE YELLOW
ELW - EDGE LINE WHITE
ELY - EDGE LINE YELLOW
LL - LANE LINE
PS - PARKING LINE
RR - RAILROAD SYMBOL MARKING
SL - STOP LINE
TL - TRANSVERSE LINE

NOTES:

1. ALL STATIONS ON SHEET ARE FROM ADAMS STREET ℄

2. CROSSWALKS ARE 8′ UNLESS OTHERWISE SHOWN

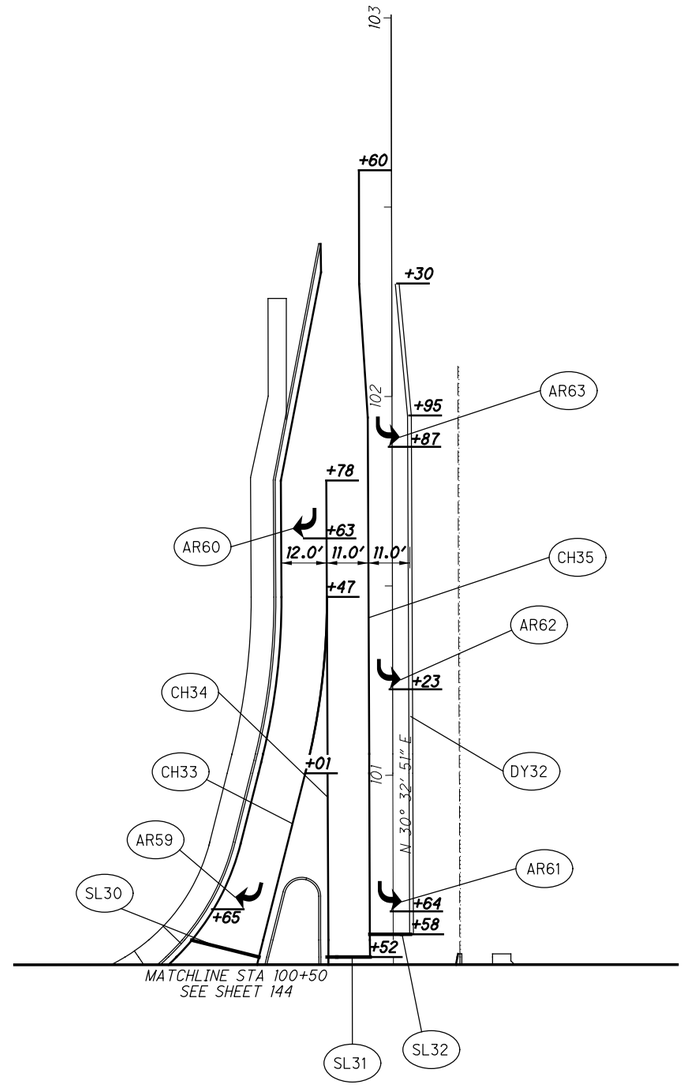

HORIZONTAL SCALE IN FEET 0 10 20 40

CALCULATED JTO
CHECKED JDH

PAVEMENT MARKING PLAN
ADAMS STREET

MIA-41-09.49

S:\CIN\4300--4399\4354\004\Drawings\CAD\108662\traffic\sheets\08662TP006.dgn Sheet 2/2/2022 11:41:21 AM Allisonw

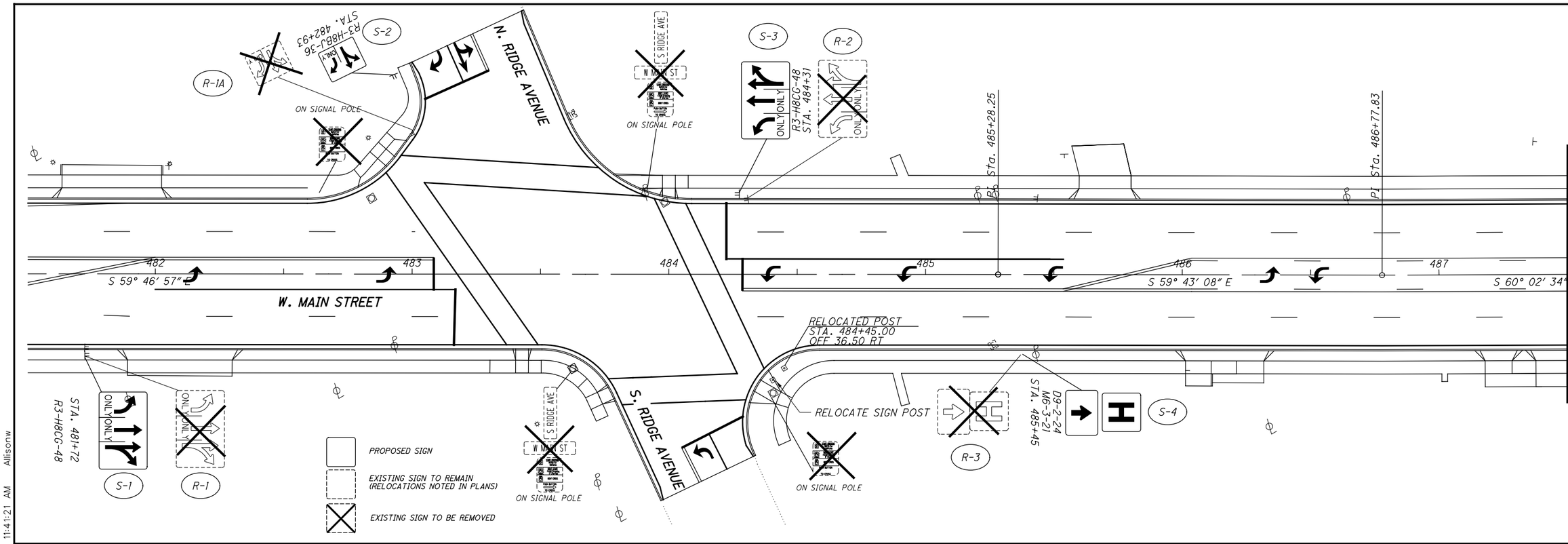

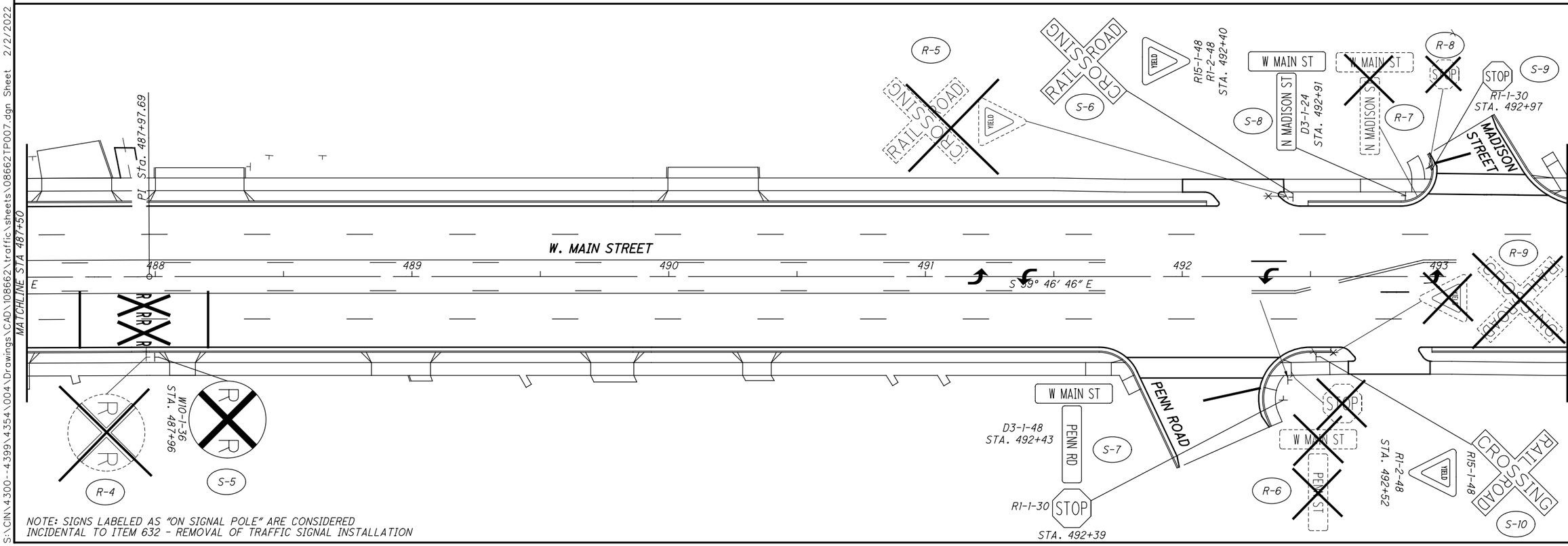

NOTE: SIGNS LABELED AS "ON SIGNAL POLE" ARE CONSIDERED INCIDENTAL TO ITEM 632 - REMOVAL OF TRAFFIC SIGNAL INSTALLATION

HORIZONTAL SCALE IN FEET 0 10 20 40

CALCULATED ATW
CHECKED JDH

SIGNING PLAN
STA. 481+50 TO STA. 493+50

MIA-41-09.49

S:\CIN\4300--4399\4354\004\Drawings\CAD\108662\traffic\sheets\086621P007.dgn Sheet 2/2/2022 11:41:21 AM Allisonw

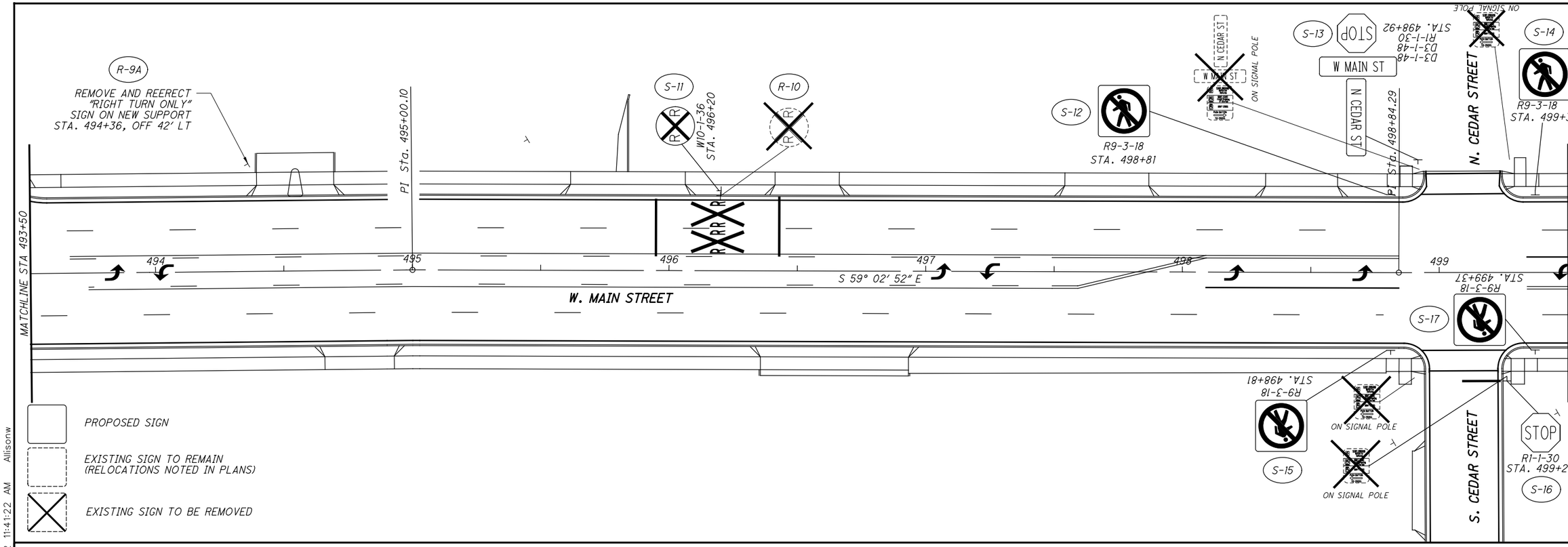

NOTE: SIGNS LABELED AS "ON SIGNAL POLE" ARE CONSIDERED INCIDENTAL TO ITEM 632 - REMOVAL OF TRAFFIC SIGNAL INSTALLATION

SIGNING PLAN
STA. 493+50 TO STA. 505+00

MIA-41-09.49

S:\CIN\4300--4399\4354\004\Drawings\CAD\108662\traffic\sheets\08662TP008.dgn Sheet 2/2/2022 11:41:22 AM Allisonw

NOTES:
1. SIGN POSTS SET IN THE SIDEWALK SHALL BE PLACED SUCH THAT A MINIMUM 4-FOOT WIDE PATHWAY IS MAINTAINED BETWEEN THE SIGN POST AND EDGE OF SIDEWALK.
2. SIGNS LABELED AS "ON SIGNAL POLE" ARE CONSIDERED INCIDENTAL TO ITEM 632 - REMOVAL OF TRAFFIC SIGNAL INSTALLATION

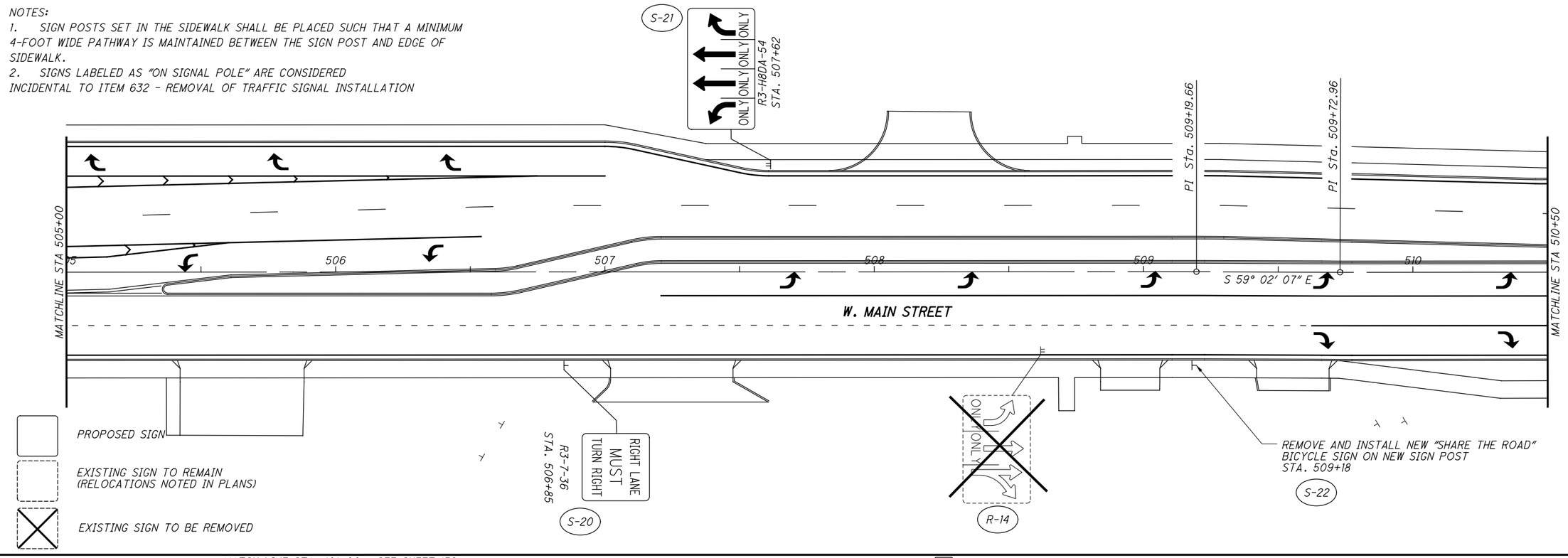

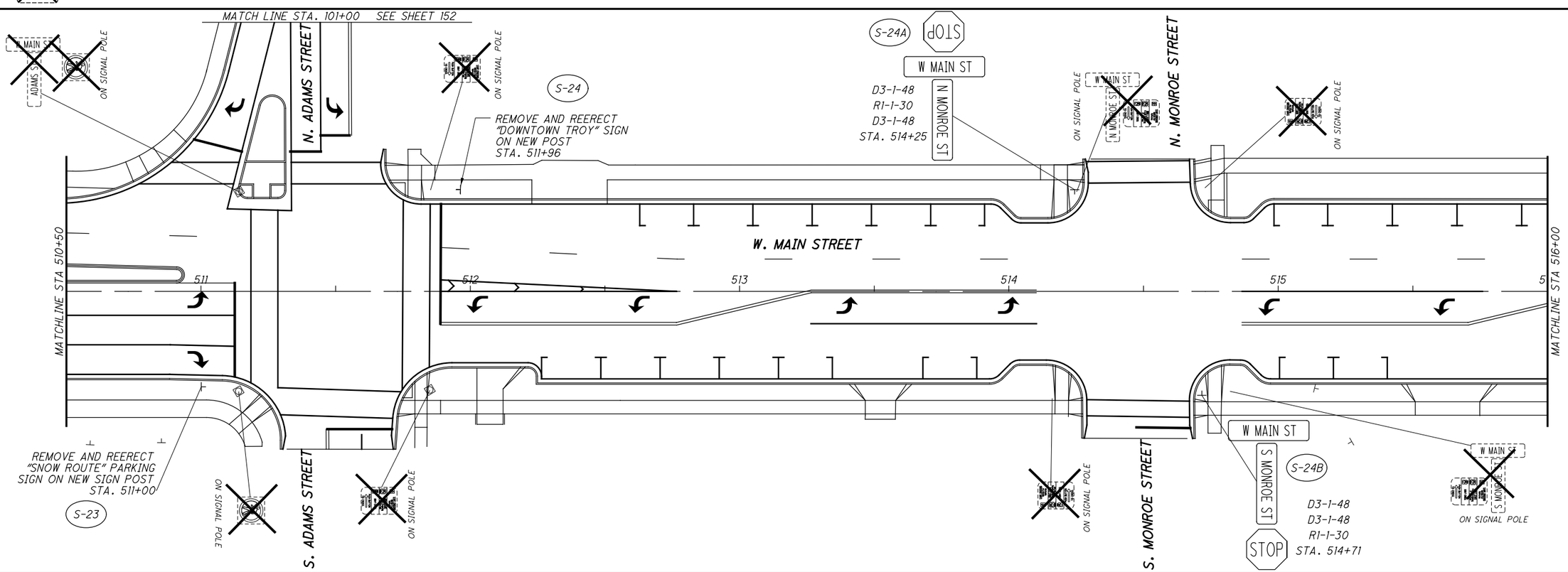

CALCULATED MAH
CHECKED JDH

HORIZONTAL SCALE IN FEET 0 10 20 40

SIGNING PLAN
STA. 505+00 TO STA. 516+00

MIA-41-09.49

S:\CIN\4300--4399\4354\004\Drawings\CAD\108662\traffic\sheets\086621P009.dgn Sheet 2/2/2022 11:41:23 AM Allisonw

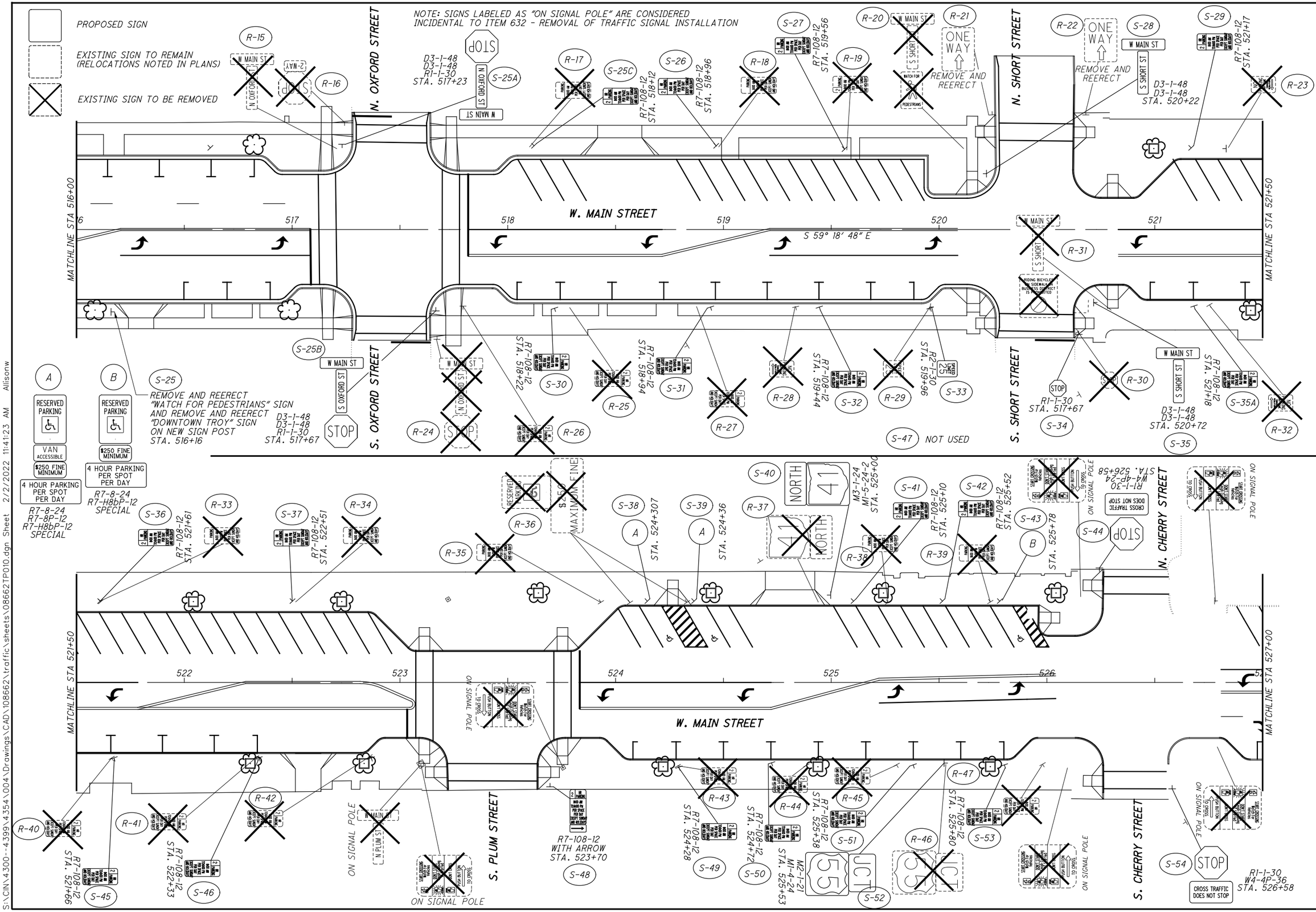

SIGNING PLAN
STA. 516+00 TO STA. 527+00

MIA-41-09.49

S:\CIN\4300--4399\4354\004\Drawings\CAD\108662\traffic\sheets\08662TP010.dgn Sheet 2/2/2022 11:41:23 AM Alisonw

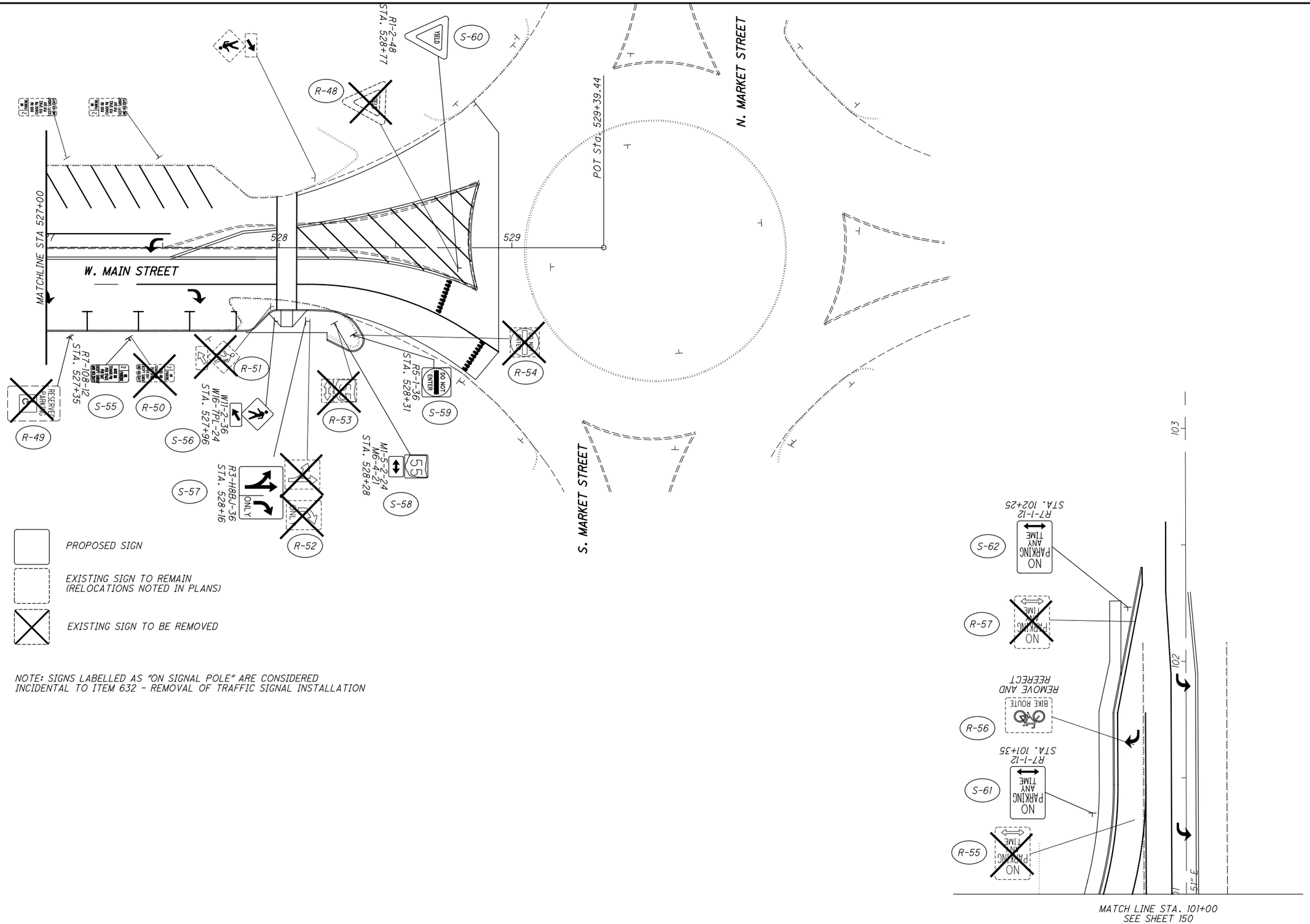

CALCULATED MAH
CHECKED JDH

HORIZONTAL SCALE IN FEET
0 10 20 40

SIGNING PLAN
STA. 527+00 TO STA. 529+00

MIA-41-09.49

S:\CIN\4300--4399\4354\004\Drawings\CAD\108662\traffic\sheets\08662TP011.dgn Sheet 2/2/2022 11:41:24 AM Allisonw

WORK LIMITS

THE WORK LIMITS SHOWN ON THESE PLANS ARE FOR PHYSICAL CONSTRUCTION ONLY. PROVIDE THE INSTALLATION AND OPERATION OF ALL WORK ZONE TRAFFIC CONTROL AND WORK ZONE TRAFFIC CONTROL DEVICES REQUIRED BY THESE PLANS WHETHER INSIDE OR OUTSIDE THESE WORK LIMITS.

POWER SUPPLY FOR TRAFFIC SIGNALS

ELECTRIC POWER SHALL BE OBTAINED FROM DAYTON POWER AND LIGHT (DP&L INC.), AT THE LOCATION INDICATED ON THE PLANS. POWER SUPPLIED SHALL BE 240 VOLTS.

ITEM 614 MAINTENANCE OF TRAFFIC SIGNAL/FLASHER INSTALLATION

THE CONTRACTOR SHALL BE RESPONSIBLE FOR MAINTAINING TRAFFIC SIGNAL/FLASHER INSTALLATIONS WITHIN THE PROJECT UNDER THE FOLLOWING CONDITIONS:

1. EXISTING SIGNAL/FLASHER INSTALLATIONS WHICH THE PLANS REQUIRE THE CONTRACTOR TO ADJUST, MODIFY, ADD ONTO OR REMOVE, OR WHICH THE CONTRACTOR ACTUALLY ADJUSTS, MODIFIES OR OTHERWISE DISTURBS. THE CONTRACTOR SHALL BE RESPONSIBLE FOR THE ENTIRE INSTALLATION (AT AN INTERSECTION) FROM THE TIME HIS OPERATIONS FIRST DISTURB THE INSTALLATION UNTIL THE INSTALLATION HAS BEEN SUBSEQUENTLY REMOVED OR MODIFIED AND THE WORK ACCEPTED.

2. NEW OR REUSED SIGNAL/FLASHER INSTALLATIONS OR DEVICES, INSTALLED BY THE CONTRACTOR. THE CONTRACTOR SHALL BE RESPONSIBLE FOR MAINTENANCE OF THESE FROM THE TIME OF INSTALLATION UNTIL THE WORK IS ACCEPTED.

THE CONTRACTOR SHALL CORRECT AS QUICKLY AS POSSIBLE ALL OUTAGES OR MALFUNCTIONS. HE SHALL PROVIDE THE MAINTAINING AGENCY AND THE ENGINEER SUCH ADDRESSES AND PHONE NUMBERS WHERE HIS MAINTENANCE FORCES CAN BE CONTACTED. THE CONTRACTOR SHALL PROVIDE ONE OR MORE PERSONS TO RECEIVE ALL CALLS AND DISPATCH THE NECESSARY MAINTENANCE FORCES TO CORRECT OUTAGES. SUCH A PERSON OR PERSONS MAY BE USED TO PERFORM OTHER DUTIES AS LONG AS PROMPT ATTENTION IS GIVEN TO THESE CALLS AND A PERSON IS READILY AVAILABLE CONTINUOUSLY 24 HOURS A DAY, 7 DAYS A WEEK. ALL LAMP OUTAGES, CABLE OUTAGES, ELECTRICAL FAILURES, EQUIPMENT MALFUNCTIONS AND MISALIGNED SIGNAL HEADS SHALL BE CORRECTED TO THE SATISFACTION OF THE ENGINEER WITH THE SIGNAL BACK TO SERVICE WITHIN FOUR HOURS AFTER THE CONTRACTOR HAS BEEN NOTIFIED OF THE OUTAGE.

IN THE EVENT NEW SIGNALS ARE DAMAGED PRIOR TO ACCEPTANCE, ALL DAMAGED EQUIPMENT EXCEPT POLES AND CONTROL EQUIPMENT SHALL BE REPLACED BY THE CONTRACTOR TO THE SATISFACTION OF THE ENGINEER WITH THE SIGNAL BACK IN SERVICE WITHIN 8 HOURS AFTER THE CONTRACTOR'S NOTIFICATION OF THE OUTAGE. THE CONTRACTOR SHALL ARRANGE FOR FULL TRAFFIC CONTROL UNTIL THE SIGNAL IS BACK IN OPERATION.

IF POLES AND/OR CONTROL EQUIPMENT ARE DAMAGED AND MUST BE REPLACED, THE CONTRACTOR SHALL MAKE TEMPORARY REPAIRS AS NECESSARY TO BRING THE SIGNAL BACK INTO FULL OPERATION WITHIN THE ALLOWED 8-HOUR PERIOD, AND SHALL MAKE PERMANENT REPAIRS OR REPLACEMENT AS SOON THEREAFTER AS POSSIBLE.

NONE OF THE ABOVE SHALL BE CONSTRUED AS COLLECTIVE OR CONSECUTIVE OUTAGE TIME PERIODS AT ANY ONE LOCATION. THAT IS, WHERE MORE THAN ONE OUTAGE OCCURS AT ANY ONE LOCATION THEN THE ALLOTTED TIME LIMIT SHALL BE FOR THE WORST SINGLE OUTAGE.

WHERE OUTAGES ARE THE DIRECT RESULT OF A VEHICLE ACCIDENT, THE RESPONSE OF THE CONTRACTOR SHALL BE AS OUTLINED ABOVE. THE CONTRACTOR SHALL BE RESPONSIBLE FOR COLLECTION OF ANY COMPENSATION FOR THIS WORK FROM THOSE PARTIES RESPONSIBLE FOR THE DAMAGE.

WHERE THE CONTRACTOR HAS FAILED TO, OR CANNOT RESPOND TO, AN OUTAGE OR SIGNAL EQUIPMENT MALFUNCTION, AT THESE LOCATIONS WITHIN HIS RESPONSIBILITY, WITHINPERIODS AS SPECIFIED ABOVE, THE ENGINEER MAY INVOKE THE PROVISIONS OF SECTION 105.15 AND ANY SUBSEQUENT BILLINGS TO THE STATE OR THE CITY OF TROY FOR POLICE SERVICES AND MAINTENANCE SERVICES BY CITY FORCES SHALLBE DEDUCTED FROM MONIES DUE OR TO BECOME DUE THE CONTRACTOR IN ACCORDANCE WITH PROVISIONS OF SECTION 105.15.

THE CONTRACTOR SHALL PROVIDE THE MAINTENANCE SERVICE ENTIRELY WITH HIS FORCES OR HE MAY CHOOSE TO ENTER INTO A COOPERATIVE UNDERSTANDING WITH THE LOCAL MAINTAINING AGENCY TO PROVIDE THE MAINTENANCE. THE CONTRACTOR SHALL INFORM THE ENGINEER, IN WRITING, OF THE MAINTENANCE METHOD SELECTED.

THE CONTRACTOR SHALL BE RESPONSIBLE FOR ANY DAMAGE TO ANY TRAFFIC SIGNAL COMPONENTS REQUIRED TO BE HANDLED DURING THE RELOCATION OF POLES AND REVISIONS TO THE SIGNAL SYSTEM.

WHEN A TRAFFIC SIGNAL MUST BE TAKEN OUT OF SERVICE BY THE CONTRACTOR, DUE TO CONSTRUCTION PROCEDURES, THIS OUTAGE SHALL NOT EXCEED 4 HOURS AND SHALL NOT INCLUDE THE HOURS OF 7 AM TO 9 AM OR 4 PM to 6 PM. ANY SIGNALIZED INTERSECTION, WHERE THE SIGNAL IS OUT OF SERVICE DUE TO CONSTRUCTION PROCEDURES, OR DUE TO AN OUTAGE OR MALFUNCTION OF EQUIPMENT AS DESCRIBED ABOVE, SHALL BE PROTECTED, BY THE CONTRACTOR, BY THE INSTALLATION OF TEMPORARY "STOP" SIGNS.

ANY VEHICULAR TRAFFIC SIGNAL HEAD, EITHER NEW OR EXISTING WHICH WILL BE OUT OF OPERATION SHALL BE COVERED IN THE MANNER DESCRIBED IN 632.25.

THE CONTRACTOR SHALL MAINTAIN COMPLETE RECORDS OF MALFUNCTIONS INCLUDING:

1. TIME OF NOTIFICATION OF MALFUNCTION;
2. TIME OF WORK CREWS ARRIVAL TO CORRECT THE MALFUNCTION;
3. ACTIONS TAKEN TO CORRECT THE MALFUNCTION, INCLUDING A LIST OF PARTS REPAIRED OR REPLACED;
4. A DIAGNOSIS OF REASON FOR THE MALFUNCTION AND PROBABILITY OF RE-OCCURRENCE;
5. TIME OF COMPLETION OF THE REPAIR AND SYSTEM RESTORED TO FULL SERVICE.

A COPY OF THESE RECORDS SHALL BE PROVIDED TO THE ENGINEER WITHIN THREE (3) WORKING DAYS FOLLOWING COMPLETION OF EACH REPAIR.

COORDINATION TIMING SHALL BE MAINTAINED UNTIL THE SIGNAL IS TAKEN OUT OF SERVICE.

IN ADDITION TO THE ABOVE REQUIREMENTS, THE CONTRACTOR SHALL PROVIDE TEMPORARY TRAFFIC SIGNALS AT THE FOLLOWING INTERSECTIONS DURING CONSTRUCTION. THIS SHALL INCLUDE TEMPORARY POLES, CONTROLLER, AND NON-INTRUSIVE DETECTION TO OPERATE THE INTERSECTIONS IN A SEMI-ACTUATED CONTROL.

WEST MAIN ST AT RIDGE AVE
WEST MAIN ST AT ELM ST
WEST MAIN ST AT ADAMS ST

ALL COSTS RESULTING FROM THE ABOVE REQUIREMENTS SHALL BE CONSIDERED TO BE INCLUDED IN THE LUMP SUM PRICE BID FOR ITEM 614, MAINTAINING TRAFFIC.

SIGNAL ACTIVATION

PRIOR TO ACTIVATING THE NEW TRAFFIC SIGNAL TO STOP AND GO MODE AND/OR REMOVING THE EXISTING TRAFFIC SIGNAL FROM SERVICE, ALL ITEMS IN THE PROPOSED SIGNAL PLAN SHALL BE FULLY COMPLETED, (I.E., VEHICLE DETECTION, PEDESTRIAN SIGNAL HEADS, ETC). IF THERE ARE CONSTRUCTABILITY ISSUES (I.E., ROADWAY WIDENING, ETC.) THAT PREVENT THE SIGNAL FROM BEING COMPLETED PRIOR TO ACTIVATION, IT SHALL BE BROUGHT TO THE ATTENTION OF THE PROJECT ENGINEER FOR THE CITY. THE PROJECT ENGINEER WILL THEN REVIEW, APPROVE OR REJECT PROPOSALS TO ACTIVATE THE TRAFFIC SIGNAL PRIOR TO COMPLETION.

THE CONTRACTOR SHALL NOTIFY THE PROJECT ENGINEER AT LEAST 10 WORKING DAYS PRIOR TO SCHEDULING THE FINAL INSPECTION OF THE SIGNAL INSTALLATION. FINAL INSPECTION IS NOT CONSIDERED COMPLETE UNTIL DESIGNATED TRAFFIC PERSONNEL INSPECT THE TRAFFIC SIGNAL AND ISSUE WRITTEN APPROVAL. IF ISSUES ARE FOUND DURING THE FINAL INSPECTION THAT EFFECT THE SAFETY OF THE TRAVELING PUBLIC AND/OR THE EFFICIENCY OF THE INTERSECTION, THE SIGNAL SHALL NOT BE ACTIVATED ON THE PROPOSED DATE. ANY PUNCH LIST ITEMS THAT ARE FOUND SHALL BE CORRECTED AND REINSPECTED BY THE ENGINEER PRIOR TO FINAL ACCEPTANCE. CITY FORCES SHALL ONLY ASSUME DAY TO DAY MAINTENANCE OF THE TRAFFIC SIGNAL AFTER FINAL WRITTEN ACCEPTANCE HAS BEEN ISSUED.

DETECTION MAINTENANCE

IF VEHICLE DETECTION BECOMES UNEXPECTEDLY DISABLED, REQUIRES MODIFICATION, OR IS SCHEDULED TO BE TEMPORARILY REMOVED DURING THE CONSTRUCTION PROJECT, THE CONTRACTOR SHALL IMMEDIATELY NOTIFY THE PROJECT ENGINEER AND DISTRICT TRAFFIC ENGINEER. THE CONTRACTOR SHALL PROVIDE TEMPORARY DETECTION WITHIN 24 HOURS.

IF THE LOSS OF VEHICLE DETECTION IS KNOWN PRIOR TO THE START OF CONSTRUCTION, IT SHALL BE DISCUSSED AT THE PRECONSTRUCTION MEETING. AT SUCH TIME, THE DISTRICT TRAFFIC ENGINEER SHALL ADVISE THE PROJECT ENGINEER AND CONTRACTOR ON THE APPROPRIATE ACTION TO RECTIFY ANY LOSS OF VEHICLE DETECTION. THIS MAY INCLUDE PLACING THE TRAFFIC SIGNAL ON MINIMUM OR MAXIMUM RECALL, MODIFYING THE MINIMUM GREEN TIMES, AND REMOVING THE MALFUNCTIONING DETECTION FROM SERVICE. WHERE NONINTRUSIVE DETECTION (I.E. VIDEO, RADAR) ALREADY EXISTS, THE CONTRACTOR SHALL INSURE THAT DETECTION IS OPERATING AND MAINTAINED BY RECONFIGURING THE DETECTION UNITS ACCORDINGLY DURING ALL CONSTRUCTION PHASES. THIS IS TO AVOID THE SIGNAL FROM MAXING OUT THE EFFECTED SIGNAL PHASE AND CREATING UNNECESSARY DELAYS.

LOCATIONS WHERE NON-INTRUSIVE DETECTION IS PROPOSED AND THE EXISTING VEHICLE DETECTION IS TO BE ABANDONED, THE NON-INTRUSIVE VEHICLE DETECTION SHALL BE INSTALLED, CONFIGURED AND MADE FULLY FUNCTIONAL PRIOR TO THE EXISTING DETECTION BEING DISABLED. THE CONTRACTOR SHALL CONTINUE TO MAINTAIN AND MODIFY THE DETECTION UNTIL FINAL ACCEPTANCE OF THE TRAFFIC SIGNAL. THIS IS TO ENSURE VEHICLE DETECTION REMAINS FULLY FUNCTIONAL THROUGHOUT CONSTRUCTION.

WORK INSPECTION

THE CONTRACTOR SHALL PROVIDE THE PROJECT ENGINEER WITH 72 HOUR NOTICE OF ANY SIGNAL WORK TO BE PERFORMED AT THE INTERSECTION SITE(S) SO THAT INSPECTION SERVICES CAN BE SUPPLIED.

ITEM 625 LUMINAIRE, DECORATIVE, AS PER PLAN

IN ADDITION TO THE REQUIREMENTS OF THE DEPARTMENT'S CONSCTRUCTION AND MATERIAL SPECIFICATIONS, LUMINAIRES SHALL MEET THE FOLLOWING REQUIREMENTS:

LUMINAIRES SHALL BE TYPE III, 100W, LED, 120-277V. THE LUMINAIRES SHALL BE HOLOPHANE WASHINGTON POSTLITE MODEL NO. STLE2-P50-40K-AS-CMC-3-GL-6. FIXTURES SHALL BE FINISHED IN THE APPROVED TROY BLUE COLOR WITH GOLD BAND, RIBS AND SPIKE FINIAL, CLOSELY MATCHING THE EXISTING DOWNTOWN FIXTURES.

ITEM 625 CONDUIT, 2", 725.05, AS PER PLAN

IN ADDITION TO ITEM 625, THE CONTRACTOR SHALL INTERCEPT THE EXISTING TRAFFIC CONDUIT NOTED IN THE PLANS AND PROVIDE A CONNECTION BETWEEN THE EXISTING AND PROPOSED PULLBOX.

PAYMENT FOR ITEM 625 CONDUIT, 2", 725.05, AS PER PLAN SHALL BE MADE FOR THE LINEAR FEET OF CONDUIT INSTALLED, INCLUDING ALL LABOR, EQUIPMENT, MATERIALS AND NEW ATTACHMENT HARDWARE.

ITEM 625 TRENCH

IT IS INTENDED THAT THE CONTRACTOR SHALL INSTALL CONDUIT PRIOR TO PLACEMENT OF THE SIDEWALK. THE COST OF COORDINATION FOR TRENCHING AND CONDUIT INSTALLATION PRIOR TO SIDEWALK PLACEMENT SHALL BE CONSIDERED INCIDENTAL TO THE COST BID FOR THIS ITEM. IN THE EVENT THE CONDUIT IS PLACED AFTER THE NEW SIDEWALK IS INSTALLED, THE CONTRACTOR, AT HIS EXPENSE SHALL REPLACE THE ENTIRE SLAB(S) AFFECTED BY THE TRENCHING, AND MATCH THE SURFACE TREATMENT AND EDGING OF THE ADJACENT WALK. IN LIEU OF REPLACING THE SIDEWALK SLABS, THE CONTRACTOR MAY ELECT TO JACK OR DRILL THE CONDUIT UNDER THE SIDEWALK. NO ADDITIONAL COMPENSATION SHALL BE PROVIDED FOR SELECTION OF EITHER METHOD.

ITEM 630 SIGN HANGER ASSEMBLY, MAST ARM, AS PER PLAN

IN ADDITION TO ITEM 630, SIGNS SHALL BE RIGIDLY ATTACHED TO THE MAST ARM INSTEAD OF BEING SUSPENDED FROM THE MAST ARM. THE SIGN SUPPORT ASSEMBLY SHALL COMPLY WITH ITEM 630.06 AND BE FULLY ADJUSTABLE TO ENABLE ORIENTATION OF SIGN FACES PERPENDICULAR TO THE APPROACH LANES. THIS ITEM SHALL INCLUDE ALL NECESSARY HARDWARE FASTENERS THAT ARE CORROSION RESISTANT, AND ACCESSORIES.

HARDWARE AND FASTENERS THAT ARE NOT STAINLESS STEEL SHALL BE PAINTED FEDERAL BLACK (AMS-STD-595-17038) AND SHALL MEET ODOT SUPPLEMENTAL SPECIFICATION 916

PAYMENT SHALL BE MADE AT THE CONTRACT UNIT PRICE BID PER EACH OF ITEM 630 SIGN HANGER ASSEMBLY, MAST ARM, AS PER PLAN IN PLACE.

ITEM 630 SIGN SUPPORT ASSEMBLY, POLE MOUNTED, AS PER PLAN

IN ADDITION TO ITEM 630, STREET NAME SIGNS SHALL BE A CANTILEVER DESIGN WITH BRACKETS PERPENDICULAR FROM THE VERTICAL SUPPORT OF THE MAST ARM INSTEAD OF BEING DIRECTLY MOUNTED TO THE POLE. THE SIGN SUPPORT ASSEMBLY SHALL COMPLY WITH ITEM 630.06 AND BE FULLY ADJUSTABLE TO ENABLE ORIENTATION OF SIGN FACES PARALLEL TO THE APPROACH AND HAVE BOTH SIDES OF THE SIGN VISIBLE. THIS ITEM SHALL INCLUDE ALL NECESSARY HARDWARE FASTENERS THAT ARE CORROSION RESISTANT, AND ACCESSORIES.

THE ATTACHMENT HARDWIRE SHALL BE PAINTED WITH A QUALITY ENAMEL, GLOSS BLACK PAINT THAT MATCHES THE SIGNAL SUPPORTS. PAINTING NOT REQUIRED WHEN ATTACHED TO THE LIGHT POLES.

PAYMENT SHALL BE MADE AT THE CONTRACT UNIT PRICE BID PER EACH OF ITEM 630 SIGN SUPPORT ASSEMBLY, POLE MOUNTED, AS PER PLAN IN PLACE.

ITEM 630 SIGN, DOUBLE FACED, STREET NAME, AS PER PLAN

STREET NAME SIGNS SHALL BE AS PER C&MS 630 EXCEPT FOR THE FOLLOWING MODIFICATIONS:

THE SIGN DIMENSIONS ARE SHOWN ON THE TRAFFIC CONTROL PLANS AND ARE ON 0.80 ALUMINUM SUBSTRATE. THE FAIRGROUNDS SIGN SHALL HAVE RED TEXT, RED ARROW, AND WHITE BACKGROUND. THE OTHER STREET NAME SIGNS SHALL HAVE A GREEN BACKGROUND.

THE CONTRACTOR SHALL PROVIDE LAYOUTS OF SIGNS HAVING STREET NAMES TO THE PROJECT MANAGER FOR APPROVAL PRIOR TO FABRICATION OF THE SIGNS.

ITEM 632 SIGNAL SUPPORT, (BY TYPE), (BY DESIGN), AS PER PLAN

SIGNAL SUPPORTS SHALL BE GALVANIZED PER 711.02 AND POWDER COATED FEDERAL BLACK (AMS-STD-595-17038). THE SIGNAL SUPPORTS SHALL MEET ODOT SUPPLEMENTAL SPECIFICATION 916.

SIGNAL SUPPORTS HAVE BEEN DESIGNED FOLLOWING ODOT SPECIFICATIONS. THE SIGNAL SUPPORT MANUFACTURER SHALL PROVIDE CALCULATIONS AND SHOP DRAWINGS VERIFYING THE ABILITY OF THE MAST ARM TO SUPPORT THE DESIGNED LOADS. THESE CALCULATIONS AND SHOP DRAWINGS SHALL HAVE AN OHIO PE STAMP AND BE PROVIDED TO THE ENGINEER PRIOR TO MANUFACTURING. NO SIGNAL SUPPORTS SHALL BE MANUFACTURED PRIOR TO SUBMITTING THE SHOP DRAWING INFORMATION.

THE POLE HEIGHT IS TO BE AS DETAILED IN THE SIGNAL DETAIL SHEETS FOR EACH INTERSECTION.

PAYMENT WILL BE MADE AT THE CONTRACT UNIT PRICE BID PER EACH OF ITEM 632 SIGNAL SUPPORT, (BY TYPE), (BY DESIGN), AS PER PLAN.

ITEM 632 COMBINATION SIGNAL SUPPORT, (BY TYPE), (BY DESIGN), AS PER PLAN

THIS ITEM OF WORK SHALL MEET ALL THE REQUIREMENTS OF ITEM 632 SIGNAL SUPPORT, (BY TYPE), (BY DESIGN), AS PER PLAN EXCEPT THAT THE SUPPORT IS A COMBINATION SIGNAL SUPPORT WITH A 10' BRACKET ARM ATTACHED ON THE TOP OF THE POLE AS SHOWN ON THE PLANS.

PAYMENT WILL BE MADE AT THE CONTRACT UNIT PRICE BID PER EACH OF ITEM 632 COMBINATION SIGNAL SUPPORT, (BY TYPE), (BY DESIGN), AS PER PLAN.

ITEM 632 PEDESTAL, (BY HEIGHT), TRANSFORMER BASE, AS PER PLAN

PEDESTALS SHALL BE GALVANIZED PER 711.02 AND POWDER COATED FEDERAL BLACK (AMS-STD-595-17038) AND SHALL MEET ODOT SUPPLEMENTAL SPECIFICATION 916. THEY SHALL BE IDENTICAL IN COLOR TO THE SIGNAL SUPPORTS ON THIS PROJECT. THE TRANSFORMER BASE SHALL BE ALUMINUM ALLOY.

L:\TroyOH\19060901-00_WestMainCorridorImprov\108662\Roadway\Sheets\108662GN001.dgn 1/26/2022 5:20:06 PM ghansel

PEDESTALS AT THE MAIN STREET AND PLUM STREET INTERSECTION SHALL BE POWDER COATED CITY OF TROY BLUE.

PAYMENT WILL BE MADE AT THE CONTRACT UNIT PRICE BID PER EACH OF ITEM 632 PEDESTAL, (BY HEIGHT), TRANSFORMER BASE, AS PER PLAN.

SIGNAL SUPPORT AND PEDESTAL FOUNDATIONS

ELEVATIONS SHOWN IN THE PLANS FOR SIGNAL SUPPORT AND PEDESTAL FOUNDATIONS ARE FOR COMPUTATIONAL PURPOSES ONLY. THE ACTUAL ELEVATION OF THE FOUNDATION SHALL BE IN ACCORDANCE WITH TRAFFIC SCD TC-21.21 PROVIDED THE EXISTING SLOPE IS LESS THAN 6:1 UNLESS THE FOLLOWING CONDITIONS ARE PRESENT:

1. THE TOP OF FOUNDATION SHALL BE FLUSH WITH THE SIDEWALK ELEVATION IF LOCATED ADJACENT TO A SIDEWALK AND HAS A PUSHBUTTON MOUNTED ON THE SUPPORT.

2. THE TOP OF FOUNDATION SHALL BE FLUSH WITH THE TOP OF CURB ELEVATION IF A CURB IS LOCATED AT THE BACK OF WALK. CONTRACTOR SHALL BREAK THE CURB AT THE LOCATION OF THE FOUNDATION SUCH THAT THE EDGE OF FOUNDATION MEETS THE BACK OF WALK.

AT LOCATIONS WHERE THE EXISTING SLOPE IS 6:1 OR GREATER, THE BURIED DEPTH OF FOUNDATION, AS SHOWN IN SCD TC-21.21 SHALL APPLY TO THE LOW SIDE OF THE SLOPE. THE TOP OF THE FOUNDATION SHALL BE SET 2 INCHES ABOVE THE EXISTING SURFACE ON THE HIGH SIDE OF THE SLOPE. THE ADDITIONAL DEPTH OF FOUNDATION NECESSARY TO MEET THESE REQUIREMENTS SHALL BE ADDED TO THE FORMED TOP.

ITEM 632 SIGNAL SUPPORT FOUNDATION

PRIOR TO ORDERING THE SIGNAL SUPPORTS, THE CONTRACTOR SHALL CONTACT OUPS TO HAVE ALL THE UTILITIES LOCATED IN THE FIELD THEN MEET WITH THE PROJECT ENGINEER TO LOCATE THE PROPOSED SUPPORT LOCATIONS TO INSURE THERE ARE NO CONFLICTS WITH UTILITIES. IF THERE ARE ISSUES, THE PROJECT ENGINEEER SHALL PROVIDE GUIDANCE AS TO THE RELOCATION OF THE SUPPORT POLES.

PAYMENT WILL BE MADE AT THE CONTRACT UNIT PRICE AND WILL BE FULL COMPENSATION FOR ALL LABOR, MATERIALS, TOOLS, EQUIPMENT AND OTHER INCIDENTALS NECESSARY FOR EACH SUPPORT FURNISHED, IN PLACE, COMPLETE AND ACCEPTED.

ITEM 632 PEDESTRIAN SIGNAL HEAD, LED, COUNTDOWN, TYPE D2, AS PER PLAN

IN ADDITION TO THE REQUIREMENTS OF C&MS 632 AND 732 THE FOLLOWING SHALL APPLY:

1. SIGNAL HEADS, BODY AND VISORS SHALL BE CONSTRUCTED OF BLACK POLYCARBONATE PLASTIC AND MEET ITE SPECIFICATIONS.

2. PROPER EXTERIOR COLORS SHALL BE OBTAINED BY USE OF COLORED PLASTIC MATERIAL RATHER THAN PAINTING.

3. PIPE, SPACERS AND FITTINGS CONSTRUCTED OF POLYCARBONATE PLASTIC MAY BE USED IN LIEU OF GALVANIZED STEEL OR ALUMINUM.

4. THE TYPICAL EGG CRATE VISOR IS TO BE REPLACED WITH A TUNNEL VISOR ON 3 SIDES OF THE SIGNAL HEAD HOUSING.

5. THE PEDESTRIAN SIGNAL HEAD SHALL BE OF THE LED COUNTDOWN TYPE.

6. NEW ATTACHMENT HARDWARE AND FITTINGS SHALL BE USED

7. HARDWARE AND FASTENERS THAT ARE NOT STAINLESS STEEL SHALL BE PAINTED FEDERAL BLACK AND SHALL MEET ODOT SUPPLEMENTAL SPECIFICATION 916.

8. THE LIGHT EMITTING DIODE (LED) MODULES SHALL MEET THE REQUIREMENTS OF C&MS 732.04-C.

THE CONTRACTOR SHALL PROVIDE THE CITY OF TROY, IN WRITING, WITH THE LED MANUFACTURER NAME, SERIAL NUMBER, PART NUMBER, DESCRIPTION OF LAMP, AND DATE OF MANUFACTURE FOR ALL LED UNITS THAT ARE TO BE USED IN THE SIGNAL HEAD PRIOR TO INSTALLATION, FOR ACCEPTANCE AND WARRANTY PURPOSES.

PAYMENT FOR ITEM 632 PEDESTRIAN SIGNAL HEAD, LED, COUNTDOWN, TYPE D2, AS PER PLAN SHALL BE MADE FOR THE NUMBER OF COMPLETE SIGNAL HEAD FURNISHED AND INSTALLED, INCLUDING ALL LABOR, EQUIPMENT, MATERIALS AND NEW ATTACHMENT HARDWARE.

ITEM 632 VEHICULAR SIGNAL HEAD, LED, (BY SECTION), 12" LENS, 1-WAY, POLYCARBONATE, AS PER PLAN, BLACK, WITH BACKPLATE

IN ADDITION TO THE REQUIREMENTS OF C&MS 632 AND 732, THE FOLLOWING REQUIREMENTS SHALL APPLY:

1.SIGNAL HEADS, BODY AND VISORS SHALL BE CONSTRUCTED OF BLACK POLYCARBONATE PLASTIC AS SPECIFIED AND MEET ITE SPECIFICATIONS.

2.PROPER EXTERIOR COLORS SHALL BE OBTAINED BY USE OF COLORED PLASTIC MATERIAL RATHER THAN PAINTING.

3. HARDWARE AND FASTENERS THAT ARE NOT STAINLESS STEEL SHALL BE PAINTED FEDERAL BLACK AND SHALL MEET ODOT SUPPLEMENTAL SPECIFICATION 916.

4.ALL SIGNAL HEADS SHALL BE RIGIDLY MOUNTED TO THE MAST ARM WITH THE YELLOW LENS LOCATED IN FRONT OF THE MAST ARM.

5.ALUMINUM BACKPLATES SHALL BE IN ACCORDANCE WITH THE C&MS AND INCLUDE A FLUORESCENT YELLOW REFLECTIVE BORDER. THE BACKPLATE SHALL BE BLACK.

PAYMENT FOR ITEM 632 VEHICULAR SIGNAL HEAD, LED, BLACK,(BY SECTION),12" LENS, BLACK, WITH BACKPLATE, AS PER PLAN SHALL BE MADE FOR COMPLETE SIGNAL HEAD FURNISHED AND INSTALLED, INCLUDING ALL LABOR, EQUIPMENT, MATERIALS, AND NEW ATTACHMENT HARDWARE.

ITEM 632 POWER SERVICE, AS PER PLAN

THIS ITEM SHALL MEET THE REQUIREMENTS OF ODOT 632.24 WITH THE FOLLOWING ADDITIONS:

POWER REQUIREMENTS ARE TO BE 120/240VAC SINGLE PHASE SERVICE. THE POWER SERVICE SHALL BE INSTALLED IN ACCORDANCE WITH ODOT STANDARD CONSTRUCTION DRAWING TC-83.10 AND AS REQUIRED BY THE SERVICING UTILITY. WHERE APPLICABLE, THE CONTRACTOR SHALL PROVIDE A GALVANIZED CONDUIT FROM THE DISCONNECT SWITCH ENCLOSURE TO THE POLE VIA AN EMBEDDED, 2 INCH CONDUIT ELL WITH ALL NECESSARY FITTINGS. A 200 AMP COMMERCIAL METER SOCKET EQUIPPED WITH A BYPASS SWITCH MUST BE FURNISHED (MOUNTED ON THE SIGNAL SUPPORT AND PAINTED BLACK). A CITY OF TROY KEYED PADLOCK IN ACCORDANCE WITH CMS 631.08 IS TO BE PROVIDED FOR THE DISCONNECT SWITCH ENCLOSURE. ALL CONNECTIONS TO THE ELECTRIC POWER LINES WILL BE MADE BY POWER COMPANY CREWS. ALL POWER SERVICES ARE TO BE UNDERGROUND FROM THE POWER SERVICE POLE TO THE CONTROLLER.

PAYMENT WILL BE MADE AT THE CONTRACT UNIT PRICE BID PER EACH OF ITEM 632 POWER SERVICE, AS PER PLAN.

ITEM 632 REMOVAL OF MISCELLANEOUS TRAFFIC SIGNAL ITEM

THIS WORK SHALL CONSIST OF REMOVAL OF SIGNAL HEADS, PEDESTRIAN SIGNAL HEADS, AND PEDESTRIAN PUSHBUTTONS AT THE INTERSECTION OF W. MAIN STREET AND CHERRY STREET IN ACCORDANCE WITH SECTION 632 OF THE ODOT CMS. SIGNAL SUPPORT POLES, SUPPORT POLE FOUNDATIONS, STRAIN POLES, AND TRAFFIC AND STREET SIGNS ARE TO REMAIN UNLESS NOTED OTHERWISE IN THE PLANS. THE CONTRACTOR SHALL COORDINATE STORAGE AND/OR DISPOSAL OF THESE ITEMS WITH THE CITY BEFORE PERFORMING THE WORK.

SIGNAL HEAD	(8)
PEDESTRIAN SIGNAL HEAD	(8)
PEDESTRIAN PUSHBUTTON	(4)
CABINET	(1)
CONTROLLER	(1)

PAYMENT FOR THIS ITEM WIL BE FOR EACH TRAFFIC ITEM. THE FOLLOWING QUANTITIES HAVE BEEN CARRIED TO THE GENERAL SUMMARY:

ITEM 632 - REMOVAL OF MISCELLANEOUS TRAFFIC SIGNAL 20 EACH

ITEM 632 REMOVAL OF TRAFFIC SIGNAL INSTALLATION

TRAFFIC SIGNAL INSTALLATIONS, INCLUDING SIGNAL HEADS, CABLE, MESSENGER WIRE, STRAIN POLES, CABINET, CONTROLLER, ETC., SHALL BE REMOVED IN ACCORDANCE WITH CMS 632.26 AND AS INDICATED ON THE PLANS. REMOVED ITEMS SHALL BE DISPOSED IN ACCORDANCE WITH THE LISTING GIVEN ON THE PLANS OR IN THIS ITEM BELOW WHERE SIGNAL PLAN SHEETS DO NOT EXIST FOR EACH INTERSECTION. REMOVED ITEMS NOT SHOWN IN THESE LISTINGS SHALL BE STORED ON THE PROJECT FOR SALVAGE BY THE CITY OF TROY.

ITEMS TO BE DISPOSED FROM MAIN STREET AND CEDAR STREET:

COMBINATION STRAIN POLE	(1)
PEDESTAL	(2)
SIGNAL HEAD	(8)
PEDESTRIAN SIGNAL HEAD	(8)
PEDESTRIAN PUSHBUTTONS	(4)
POLE MOUNTED SIGNS	(2)
CABINET	(1)

ITEMS TO BE DISPOSED FORM MAIN STREET AND MONROE STREET:

STRAIN POLE	(1)
PEDESTAL	(2)
SIGNAL HEAD	(8)
PEDESTRIAN SIGNAL HEAD	(8)
PEDESTRIAN PUSHBUTTONS	(4)
POLE MOUNTED SIGNS	(3)
CABINET	(1)

ALL EQUIPMENT INSIDE THE EXISTING CABINETS AT ALL INTERSECTIONS SHALL BE REMOVED AND STORED ON THE PROJECT FOR SALVAGE BY THE CITY OF TROY. THIS EQUIPMENT INCLUDES, BUT IS NOT LIMITED TO:

LOOP DETECTOR UNITS
CONTROLLER
CONFLICT MONITOR

REMOVED ITEMS IDENTIFIED FOR STORAGE SHALL BE DELIVERED TO THE CITY OF TROY FOR SALVAGE. CONTACT THE CITY ENGINEER TO ARRANGE A MUTUALLY AGREEABLE TIME FOR ITEMS TO BE DELIVERED TO THE CITY OF TROY STREETS DEPARTMENT FACILITY.

THE CONTRACTOR SHALL REMOVE AND DISPOSE OF ITEMS NOT STORED AT NO ADDITIONAL COST TO THE PROJECT. THE CONTRACTOR SHALL ALSO REMOVE ALL EXISTING FOUNDATIONS OF STRAIN POLES AND PEDESTALS TO A MINIMUM OF 1 FOOT BELOW GRADE AND REGRADE/RESOD THE AREA (INCLUDED AS PART OF THE COST OF THIS ITEM).

ITEM 633 CONTROLLER ITEM, MISC.: CABINET, TYPE TS-1, AS PER PLAN

THE CABINET SHALL BE FURNISHED AND INSTALLED ACCORDING TO CMS 633.08 AND 733.03 AND BE LISTED ON THE TRAFFIC AUTHORIZED PRODUCT LIST (TAP).

THE GROUND MOUNTED CABINET SHALL BE A NEMA TS-1, TYPE 2, CABINET SIZE 7 WITH 16 LOAD SWITCH BAYS, LED UNDER-SHELF LIGHTING, POWER HARNESSES FOR BOTH TS2 TYPE 1 AND TYPE 2 CONTROLLERS AND SHALL HAVE A MINIMUM OF THREE SHELVES AND ONE PULLOUT DRAWER.

THE CABINET SHALL BE FURNISHED WITH AN EDI MMU AS ALLOWED ON THE TAP/APPROVED PRODUCTS LIST.

PAYMENT FOR ITEM 633 CONTROLLER ITEM, MISC.: CABINET, TYPE TS-1, AS PER PLAN WILL BE AT THE CONTRACT UNIT BID PRICE PER EACH COMPLETE AND IN PLACE INCLUDING ALL CONNECTIONS TESTED AND ACCEPTED.

ITEM 633 CONTROLLER ITEM, MISC.: CABINET, TYPE TS-1, AS PER PLAN (PLUM ST)

IN ADDITION TO MEETING ALL THE REQUIREMENTS OF ITEM 633 CONTROLLER ITEM, MISC.: CABINET, TYPE TS-1, AS PER PLAN, THE FOLLOWING REQUIREMENTS SHALL APPLY TO THE CABINET INSTALLED AT THE MAIN STREET AND PLUM STREET INTERSECTION.

1. THE CABINET SHALL INCLUDE AN ADDITIONAL SHELF TO HOUSE A 30"W X 24"D X 4"H AMPLIFIER.

2. THE CABINET SHALL INCLUDE TWO (2), DOUBLE POLE, 100 AMP CIRCUIT BREAKERS, TO SUPPLY 240/120VAC (SINGLE PHASE) TO INDEPENDENT LIGHTING/GENERAL USE ELECTRICAL CIRCUITS. WIRING OF THE LIGHTING/ GENERAL USE CIRCUIT IN THE CABINET IS TO ENABLE POWER TO BE TURNED OFF IN THE CABINET WHEN THE CIRCUIT IS NOT ACTIVE. IN THE EVENT THE DISCONNECT SWITCH TURNS OFF POWER TO THE TRAFFIC SIGNAL, POWER SHALL ALSO BE TURNED OFF TO THE LIGHTING/ GENERAL USE CIRCUIT.

ITEM 633 UNINTERRUPTIBLE POWER SUPPLY (UPS), 1000 WATT, AS PER PLAN

IN ADDITION TO THE REQUIREMENTS OF C&MS 633 AND 733, A CABINET RISER (8 INCH MINIMUM) AND ANCHOR BOLTS WILL BE PROVIDED FOR BASE-MOUNTED CABINETS. THE UPS CABINET SHALL BE BASE-MOUNTED ON THE SIGNAL CONTROLLER/CABINET FOUNDATION. THE FOUNDATION FOR THE SIGNAL CABINET SHALL BE EXPANDED TO ACCOMMODATE THE UPS CABINET.

THE UPS CABINET SHALL INCLUDE A GENERATOR POWER PANEL WITH A HEAVY-DUTY POWER RELAY VERSUS THE LINE VOLTAGE GENERATOR SWITCH. THE GENERATOR INLET SHALL BE A RECESSED PANEL WITH A DOOR THAT IS FLUSH WITH THE EXTERNAL SIDE OF THE UPS CABINET. IT SHALL INCLUDE A RECESSED PLUG, AUTOMATIC TRANSFER SWITCH AND A DOOR THAT SECURELY CLOSES OVER THE POWER CORD.

THE UPS OUTPUT NOTIFICATIONS FOR ON BATTERY, BATTERY 2-HOUR TIMER, AND LOW BATTERY SHALL BE WIRED INTO THE TRAFFIC SIGNAL CABINET BACK PANEL TO PROVIDE SPECIAL STATUS ALARMS FOR EACH OUTPUT INTO THE SIGNAL CONTROLLER.

THIS ITEM SHALL INCLUDE A RED LED STATUS INDICATOR LAMP TO ALLOW MAINTENANCE PERSONNEL AND LAW ENFORCEMENT TO QUICKLY ASSESS WHETHER A TRAFFIC SIGNAL CABINET IS BEING POWERED BY A UPS. THE LED HOUSING SHALL BE NEMA 4X, IP65 OR IP66, RATED FOR OUTDOOR USE AND BE TAMPER/SHATTER RESISTANT. IT SHALL BE A DOMED ENCLOSURE CONTAINING A RED LENS WITH LED THAT IS VISIBLE FROM 100 FOOT MINIMUM. THE ENCLOSURE AND LED MODULE SHOULD BE PLACED AND CENTERED ON THE TOP SURFACE OF THE UPS CABINET AND SEALED FROM WATER INTRUSION. IT SHOULD BE WIRED USING MINIMUM 20GA STRANDED, INSULATED HOOKUP WIRE TO THE STATUS RELAY OUTPUTS OF THE UPS. THE WIRES SHALL BE TERMINATED BY LUGS AT THE DISPLAY END AND PERMANENTLY LABELED "BACKUP POWER STATUS DISPLAY," WITH WIRE POLARITY INDICATED. THE RED LED SHALL ONLY ILLUMINATE TO INDICATE THE CABINET IS OPERATING UNDER UPS BACKUP POWER (THE "BACKUP" OPERATING CONDITION). THIS ITEM INCLUDES PROGRAMMING THE UPS STATUS RELAY OUTPUTS TO PRODUCE THE LAMP STATUS DISPLAYS. THESE STATUS DISPLAYS WILL BE SOLID 100% DUTY CYCLE (NOT FLASHING) DISPLAYS. THE OPERATING VOLTAGE OF THE LED LAMP SHALL BE 120V AC UNLESS OTHERWISE INDICATED.

ITEM 809 ATC V6.24 CONTROLLER, AS PER PLAN

THE CONTROLLER UNIT SHALL BE FURNISHED AND INSTALLED PER SS 809 AND BE LISTED ON THE TRAFFIC AUTHORIZED PRODUCTS (TAP) LIST.

THE CONTROLLER SHALL BE AN ECONOLITE COBALT AND COMPATIBLE WITH THE CABINET TYPE BEING INSTALLED.

ITEM 809 ADVANCE RADAR DETECTION, AS PER PLAN

THIS ITEM OF WORK SHALL CONSIST OF FURNISHING AND INSTALLING AN ADVANCE RADAR DETECTION UNIT. THE DETECTION UNIT SHALL INCLUDE THE FOLLOWING:

1. POWER SHALL BE PROVIDED FROM THE TRAFFIC CABINET.

2. ALL REQUIRED INPUTS CARDS SHALL BE INCLUDED IN THE TRAFFIC CABINET AND SHALL BE COMPATIBLE WITH CALTRANS, NEMA TS1 AND NEMA TS2 DETECTOR RACKS. THE CARDS SHALL PROVIDE TRUE PRESENCE DETECTOR CALLS OR CONTACT CLOSURE TO THE TRAFFIC CONTROLLER.

3. THE UNIT SHALL BE MOUNTED DIRECTLY TO A POLE OR MAST ARM, AS RECOMMENDED BY THE MANUFACTURER. CABLE(S) SHALL BE PROVIDED AS REQUIRED AND RECOMMENDED BY THE MANUFACTURER.

4. SURGE PROTECTION DEVICES, AS RECOMMENDED BY THE MANUFACTURER SHALL BE INCLUDED BOTH AT THE POLE WHERE THE UNIT IS LOCATED TO PROTECT THE UNIT AND IN THE TRAFFIC CABINET TO PROTECT THE CABINET ELECTRONICS.

5. THE MANUFACTURER'S REPRESENTATIVE SHALL BE ON SITE DURING INSTALLATION AND TESTING AND SHALL PROVIDE ON-SITE TRAINING ON THE SETUP, OPERATION AND MAINTENANCE OF THE UNIT.

7. THE POWER SUPPLY AND COMMUNICATION MODULES SHALL BE SECURED TO A SINGLE PANEL THAT CAN BE MOUNTED INTERIOR TO THE TRAFFIC CABINET. THE PANEL SHALL INCLUDE MODULAR-PLUG STYLE CONNECTIONS FOR UP TO FOUR (4) SENSOR CABLES. ADDITIONAL SENSORS MAY BE HARD-WIRED TO THE COMMUNICATION MODULES, AS NECESSARY.

PAYMENT FOR ITEM 809 ADVANCE RADAR DETECTION, AS PER PLAN SHALL BE MADE AT THE CONTRACT UNIT PRICE FOR EACH UNIT, COMPLETE AND IN PLACE INCLUDING ALL REQUIRED CABINET HARDWARE, MOUNTING BRACKETS, CABLES, CONDUIT, CONNECTIONS TESTED AND ACCEPTED, AND ANY OTHER

NECESSARY HARDWARE TO ESTABLISH A FULLY FUNCTIONAL DETECTION SYSTEM.

ITEM 632 COMBINATION SIGNAL SUPPORT, (BY TYPE), (BY DESIGN), AS PER PLAN (ALTERNATE BID A)

THIS ITEM OF WORK SHALL MEET ALL THE REQUIREMENTS OF ITEM 632 COMBINATION SIGNAL SUPPORT, (BY TYPE), (BY DESIGN), AS PER PLAN EXCEPT THAT IT IS A COMBINATION SIGNAL SUPPORT WITH AN ITEM 625 DECORATIVE LUMINAIRE ATTACHED ON THE TOP OF THE POLE AS SHOWN ON THE PLANS.

PAYMENT WILL BE MADE AT THE CONTRACT UNIT PRICE BID PER EACH OF ITEM 632 COMBINATION SIGNAL SUPPORT, (BY TYPE), (BY DESIGN), AS PER PLAN (ALTERNATE BID A).

ITEM 632 COMBINATION SIGNAL SUPPORT, (BY TYPE), (BY DESIGN), AS PER PLAN (ALTERNATE BID B)

PROVIDE HOLOPHANE NORTH YORKSHIRE CAST IRON AND STEEL POLE, 18 FEET HIGH, WITH FLUTED TAPERED SHAFTS, CLAM SHELL BASE, MAST ARM LENGTH AS SPECIFIED IN THE PLANS, GALVANIZED STEEL ANCHOR BOLTS, FACTORY POWDER COATED IN THE APPROVED CITY OF TROY BLUE COLOR, MODEL NO. NYS 18 FTB 24 CSB XXMASTARM ABG GN. THE SUPPORT SHALL HAVE ITEM 625 DECORATIVE LUMINAIRE ATTACHED ON THE TOP OF THE POLE.

ALSO PROVIDE A WEATHER-PROOF IN USE GFCI RECEPTACLE NEAR TOP OF POLE (MODEL NO. FGIUS-S DG); A ONE INCH CLAMP-ON FLAGPOLE HOLDER (MODEL NO. FPH1/COXX DG); AND ONE SET OF DOUBLE BREAK-AWAY CLAMPS ON BANNER ARMS (TOP AND BOTTOM) WITH ACORN END CAPS (MODEL NO. BA XX CTBS1 A X GN) WITH EACH POLE.

PAYMENT WILL BE MADE AT THE CONTRACT UNIT PRICE BID PER EACH OF ITEM 632 COMBINATION SIGNAL SUPPORT, (BY TYPE), (BY DESIGN), AS PER PLAN (ALTERNATE BID B)

ITEM 816 VIDEO DETECTION SYSTEM, AS PER PLAN (ALTERNATE BID A)

THE CONTRACTOR SHALL SUPPLY A VIDEO DETECTION SYSTEM WITH 1-4 DISTINCT CAMERAS (ONE PER DIRECTION AS OUTLINED IN THE PLANS) AT THE INTERSECTIONS THAT MEET THE REQUIREMENTS OF ODOT SUPPLEMENTAL SPECIFICATIONS 816 AND 907. THE LATEST MODEL CAMERAS SHALL BE PROVIDED. THEY SHALL ALSO BE ACCESSIBLE FROM A VIDEO MONITORING AND EDITING SOFTWARE INTERFACE TO ACCESS THE CAMERAS FROM INSIDE THE CABINET. A SMALL-SCALE VIEWING MONITOR SHALL BE PROVIDED IN EACH CABINET THAT ALLOWS THE DETECTION ZONES AND ACTIVATIONS FOR EACH CAMERA TO BE VIEWED FROM THE CABINET.

THIS ITEM SHALL INCLUDE ALL CABLING AND CAMERA RISERS AS NECESSARY TO COMPLETE THE INSTALLATION.

PAYMENT FOR ITEM 816 VIDEO DETECTION SYSTEM, AS PER PLAN SHALL BE MADE AT THE CONTRACT UNIT PRICE FOR EACH UNIT, COMPLETE AND IN PLACE INCLUDING ALL REQUIRED CABINET HARDWARE, SOFTWARE, MOUNTING BRACKETS, CABLES, CONDUIT, CONNECTIONS TESTED AND ACCEPTED, AND ANY OTHER NECESSARY HARDWARE TO ESTABLISH A FULLY FUNCTIONAL DETECTION SYSTEM THAT IS ACCESSIBLE FROM THE CABINET.

ITEM 816 VIDEO DETECTION SYSTEM, AS PER PLAN (ALTERNATE BID B)

THIS ITEM OF WORK SHALL MEET ALL THE REQUIREMENTS OF ITEM 816 VIDEO DETECTION SYSTEM, AS PER PLAN (ALTERNATE BID A) EXCEPT THAT THE EQUIPMENT SHALL BE ECONOLITE AUTOSCOPE CAMERA TYPE.

ITEM 633 CONTROLLER ITEM, MISC.: 10/100/1000 ETHERNET SWITCH, AS PER PLAN

THE CONTRACTOR SHALL INSTALL THIS ITEM IN THE CONTROLLER CABINET, CONNECT EACH ETHERNET DEVICE AND ESTABLISH CONNECTION TO THE NETWORK, MAKING THE COMMUNICATION NETWORK FULLY FUNCTIONAL AND OPERATIONAL. THE SWITCH AND ALL DEVICES CONNECTED TO IT SHALL COMMUNICATE THROUGH THE FIBER-OPTIC CABLE BACKBONE PROVIDED BY OTHERS BACK TO THE CENTRAL OFFICE COMPUTER/SERVERS LOCATED AT THE CITY MAINTENANCE FACILITY.

THE ETHERNET SWITCH SHALL BE MANUFACTURED BY IBS, COMNET, OR APPROVED EQUAL, AND BE COMPATIBLE WITH THE EXISTING CENTRACS SOFTWARE ENVIRONMENT.

THIS ITEM EXPLICITLY REQUIRES A CONNECTION BE ESTABLISHED BETWEEN THE CENTRAL OFFICE COMPUTER AND THE FIELD EQUIPMENT AT THE PROJECT SIGNALIZED INTERSECTIONS VIA THE FIBER OPTIC NETWORK AND DROP CABLES/TERMINATION PANELS THAT WILL BE PROVIDED AND CONNECTED WITHIN THE CONTROLLER CABINET BY OTHERS. NO ADDITIONAL ITEMS OR PAYMENT SHALL BE NECESSARY TO MAKE THIS CONNECTION FULLY FUNCTIONAL AND ALLOW ACCESS TO THE TRAFFIC SIGNAL CONTROLLER (IN THE PROPOSED CENTRACS SOFTWARE) FROM THE CENTRAL OFFICE LOCATION. IF ANY ADDITIONAL COMMUNICATIONS EQUIPMENT IS NECESSARY AT THE CENTRAL OFFICE LOCATION TO MAKE THIS COMMUNICATION POSSIBLE, IT SHALL BE PROVIDED AS PART OF ITEM 633 CONTROLLER ITEM, MISC.: TRAFFIC MANAGEMENT CENTER, AS PER PLAN.

THIS ITEM SHALL BE COMPATIBLE WITH ITEM 809 ATC V6.24 CONTROLLER, AS PER PLAN. PAYMENT FOR ITEM 633 CONTROLLER ITEM, MISC.: 10/100/1000 ETHERNET SWITCH, AS PER PLAN SHALL BE MADE AT THE CONTRACT UNIT PRICE PER EACH, COMPLETE AND IN PLACE AND SHALL INCLUDE ALL LABOR, MATERIALS, AND EQUIPMENT NECESSARY TO COMPLETE THE FULLY FUNCTIONING CONNECTION BACK TO THE CITY'S CENTRAL OFFICE LOCATION AS DESCRIBED ABOVE.

ITEM 633 CONTROLLER ITEM, MISC.: TRAFFIC MANAGEMENT CENTER, AS PER PLAN

THE CONTRACTOR SHALL PROVIDE A FULLY FUNCTIONAL TRAFFIC MANAGEMENT CENTER AT THE MAINTENANCE FACILITY, 1400 EXPERIMENT FARM ROAD, THAT ALLOWS FOR COMMUNICATION OF THE FIVE TRAFFIC SIGNAL CONTROLLERS TO THE CENTRAL MANAGEMENT SOFTWARE PROVIDED WITH THIS ITEM. THE CENTRALLY CONTROLLER TRAFFIC SIGNAL SYSTEM SOFTWARE SHALL BE THE LATEST VERSION OF:

ECONOLITE CENTRACS

THE TRAFFIC MANAGEMENT CENTER SHALL INCLUDE A CENTRAL COMPUTER/SERVER WORKSTATION, TWO 21" MONITORS, AND THE CENTRAL SYSTEM SOFTWARE. ALL LICENSES TO OPERATE THE WORKSTATION AND SOFTWARE SHALL BE INCLUDED AS PART OF THIS ITEM. ALL FIVE INTERSECTIONS THAT ARE INSTALLED AS A PART OF THIS PROJECT SHALL BE SET UP IN THE SOFTWARE AND SHALL BE ACCESSIBLE AND ABLE TOCOMMUNICATE VIA THE FIBER OPTIC CONNECTION AT EACH INTERSECTION.

THE INSTALLATION OF FIBER OPTIC CABLE THAT CONNECTS THE FIVE TRAFFIC SIGNAL INSTERSECTIONS AND THE CENTRAL COMPUTER LOCATION WILL BE PROVIDED BY OTHERS. THE CONTRACTOR SHALL PROVIDE ALL CONNECTIONS BETWEEN THE FIBER OPTIC TERMINATION PANEL INSIDE THE MAINTENANCE FACILITY AND THE PROPOSED CENTRAL SYSTEM SERVER HARDWARE. THE CONTRACTOR SHALL ALSO PROVIDE ALL COMMUNICATION EQUIPMENT NECESSARY TO COMMUNICATE BETWEEN THE INDIVIDUAL CONTROLLERS AND THE CENTRAL SYSTEM COMPUTER.

THIS ITEM SHALL RESULT IN THE INSTALLATION OF A FULLY FUNCTIONAL TRAFFIC MANAGEMENT CENTER WITH ALL FIVE INTERSECTIONS COMMUNICATING AT THE TIME OF INSTALLATION AND THROUGHOUT THE GUARANTEE PERIOD. THE SOFTWARE LICENSING SHALL ACCOMMODATE THE ADDITION OF UP TO 20 ADDITIONAL INTERSECTIONS IN THE FUTURE WITHOUT ADDITIONAL COST TO THE CITY OF TROY.

PAYMENT FOR ITEM 633 TRAFFIC MANAGEMENT CENTER, AS PER PLAN SHALL BE MADE AT THE CONTRACT UNIT PRICE FOR EACH UNIT, COMPLETE AND IN PLACE INCLUDING ALL REQUIRED COMPUTER HARDWARE, SOFTWARE, MONITORS, MOUNTING BRACKETS, CABLES, CONDUIT, CONNECTIONS TESTED AND ACCEPTED, AND ANY OTHER NECESSARY HARDWARE TO ESTABLISH A FULLY FUNCTIONAL COMMUNICATION SYSTEM WITH THE FIVE INTERSECTIONS.

GROUNDING AND BONDING

THE REQUIREMENTS OF THE CONSTRUCTION AND MATERIAL SPECIFICATIONS (CMS) AND THE TC SERIES OF STANDARD CONSTRUCTION DRAWINGS ARE MODIFIED AS FOLLOWS:

1. ALL METALLIC PARTS CONTAINING ELECTRICAL CONDUCTORS SHALL BE PERMANENTLY JOINED TO FORM AN EFFECTIVE GROUND FAULT CURRENT PATH BACK TO THE GROUNDED CONDUCTOR IN THE POWER SERVICE DISCONNECT SWITCH.
A. PROVIDE AN EQUIPMENT GROUNDING CONDUCTOR IN METALLIC CONDUITS (725.04) IN ADDITION TO THE CONDUCTORS SPECIFIED AND BOND THE CONDUIT TO THIS GROUNDING CONDUCTOR.
B. WHEN AN EQUIPMENT GROUNDING CONDUCTOR IS REQUIRED IN PLASTIC CONDUIT (725.05), THE INSTALLATION SHALL INCLUDE A SEPARATE EQUIPMENT GROUNDING CONDUCTOR IN ADDITION TO THE CONDUCTORS SPECIFIED.
C. METALLIC CONDUIT CARRYING THE LOOP WIRES FROM IN THE PAVEMENT TO THE PULL BOX SPLICE LOCATION WILL ONLY BE BONDED AT THE PULL BOX END, AND WILL NOT CONTAIN AN EQUIPMENT GROUNDING CONDUCTOR.
D. IF MULTIPLE CONDUIT RUNS BEGIN AND END AT THE SAME POINTS, ONLY ONE EQUIPMENT GROUNDING CONDUCTOR IS REQUIRED.
E. IF AN EQUIPMENT GROUNDING CONDUCTOR IS NEEDED IN CONDUIT BETWEEN SIGNALIZED INTERSECTIONS FOR UNDERGROUND INTERCONNECT CABLE, THE GROUNDING SYSTEM FOR EACH SIGNALIZED INTERSECTION WILL BE SEPARATED ABOUT MIDWAY BETWEEN THE INTERSECTIONS.
F. THE MESSENGER WIRE AT SIGNALIZED INTERSECTIONS WILL BE USED AS THE CONDUCTIVE PATH FROM CORNER TO CORNER IF CONDUIT IS NOT PROVIDED UNDER THE ROADWAY. WHEN CONDUIT CONNECTS THE CORNERS OF AN INTERSECTION, AN EQUIPMENT GROUNDING CONDUCTOR SHALL BE USED IN THE CONDUIT.

2. CONDUITS.
A. THE 725.04 CONDUIT SHALL HAVE GROUNDING BUSHINGS INSTALLED AT ALL TERMINATION POINTS. THE BUSHING MATERIAL SHALL BE COMPATIBLE WITH GALVANIZED STEEL CONDUIT AND THE GROUNDING LUG MATERIAL SHALL BE COMPATIBLE FOR USE WITH COPPER WIRE. THREADED OR COMPRESSION TYPE BUSHINGS MAY BE USED.
B. THE 725.05 CONDUIT SHALL HAVE THE INSIDE AND OUTSIDE DIAMETERS OF THE CONDUIT DEBURRED AT ALL TERMINATION POINTS.
C. BOTH ENDS OF METALLIC CONDUIT SHALL BE BONDED TO THE EQUIPMENT GROUNDING CONDUCTOR.
D. METALLIC CONDUIT MAY BE BONDED TO METALLIC BOXES THROUGH THE USE OF CONDUIT FITTINGS UL APPROVED FOR THIS TYPE OF CONNECTION, WITH THE BOX BONDED TO THE EQUIPMENT GROUNDING CONDUCTOR.

3. WIRE FOR GROUNDING AND BONDING.
A. USE INSULATED, COPPER WIRE FOR THE EQUIPMENT GROUNDING CONDUCTOR. BONDING JUMPERS IN BOXES AND ENCLOSURES MAY BE BARE OR INSULATED COPPER WIRE. WIRE SIZE SHALL BE AS FOLLOWS:
I. USE 4 AWG BETWEEN THE POWER SERVICE AND SUPPORTS, POLES, PEDESTALS, CONTROLLER OR FLASHER CABINETS.
II. USE A MINIMUM 8 AWG BETWEEN LOOP DETECTOR PULL BOXES AND THE FIRST CONDUIT THAT REQUIRES A LARGER SIZE AS SPECIFIED IN 3.A.I ABOVE.
III. USE A MINIMUM 8 AWG BETWEEN THE "PREPARE TO STOP WHEN FLASHING" INSTALLATION (INCLUDING SUPPORT) AND THE FIRST CONDUIT THAT REQUIRES A LARGER SIZE AS SPECIFIED IN 3.A.I ABOVE.
IV. THE INSULATION SHALL BE GREEN OR GREEN WITH YELLOW STRIPE(S). FOR 4 AWG OR LARGER, INSULATION MAY ALSO BE BLACK WITH GREEN TAPE/LABELS INSTALLED AT ALL ACCESS POINTS.
B. IN A HIGHWAY LIGHTING SYSTEM, THE EQUIPMENT GROUNDING CONDUCTOR SHALL BE THE SAME WIRE SIZE AS THE DUCT CABLE OR DISTRIBUTION CABLE CIRCUIT CONDUCTORS, WITH THE MINIMUM CONDUCTOR SIZE OF 4 AWG. BONDING JUMPERS WILL BE MINIMUM SIZE 4 AWG.

4. GROUND ROD.
A. A 3/4 INCH SCHEDULE 40 PVC CONDUIT WILL BE USED IN FOUNDATIONS AND CONCRETE WALLS FOR THE GROUNDING CONDUCTOR (GROUND WIRE) RACEWAY TO THE GROUND ROD. SHOULD METALLIC CONDUIT BE USED, BOTH ENDS OF THE CONDUIT SHALL BE BONDED TO THE GROUNDING CONDUCTOR.
B. THE TYPICAL GROUNDING CONDUCTOR (GROUND WIRE) SHALL BE 4 AWG INSULATED, COPPER.

5. THE GREEN CONDUCTOR IN SIGNAL CABLES (CONDUCTOR #4) SHALL NOT BE USED TO SUPPLY POWER TO A SIGNAL INDICATION. IT WILL BE CONNECTED TO THE SIGNAL BODY AS AN EQUIPMENT GROUND IN ALUMINUM HEADS AND IT WILL BE UNUSED IN PLASTIC HEADS. UNUSED CONDUCTORS SHALL BE GROUNDED IN THE CABINET. TYPICAL USE OF CONDUCTORS IS AS FOLLOWS:

COND. NO./	COLOR/	VEHICLE SIGNAL/	PED SIGNAL
1/	BLACK/	GREEN BALL/	#1 WALK
2/	WHITE/	AC NEUTRAL/	AC NEUTRAL
3/	RED/	RED BALL/	#1 DW/FDW
4/	GREEN/	EQUIPMENT GROUND/	EQUIPMENT GROUND
5/	ORANGE/	YELLOW BALL/	#2 DW FDW
6/	BLUE/GRN	ARROW/	#2 WALK
7/	WHITE W/ BLK STRIPE	YELLOW ARROW/	NOT USED

6. POWER SERVICE AND DISCONNECT SWITCH.
A. AT THE POWER SERVICE LOCATION, THE GROUNDING CONDUCTOR (GROUND WIRE) FROM THE DISCONNECT SWITCH NEUTRAL (AC-) BAR TO THE GROUND ROD SHALL BE A CONTINUOUS, UNSPLICED CONDUCTOR. IF SPLICED, IT SHALL BE AN EXOTHERMIC WELD BUTT SPLICE.
B. THE SERVICE NEUTRAL (AC-) SHALL ONLY BE CONNECTED TO GROUND AT THE PRIMARY POWER SERVICE DISCONNECT SWITCH.
I. NEMA CONTROLLER CABINETS: IF A POWER SERVICE DISCONNECT SWITCH IS LOCATED BEFORE THE CONTROLLER CABINET, THE NEUTRAL (AC-) AND THE GROUNDING BARS IN THE CONTROLLER CABINET SHALL NOT BE CONNECTED TOGETHER AS SHOWN IN NEMA TS-2, FIGURE 5-4.
II. IF SECONDARY DISCONNECT SWITCHES ARE CONNECTED AFTER THE PRIMARY DISCONNECT SWITCH, THE NEUTRAL (AC-) SHALL ONLY BE GROUNDED AT THE PRIMARY SWITCH. EQUIPMENT GROUNDING CONDUCTORS SHALL BE BROUGHT TO THE PRIMARY SWITCH BUT SHALL BE GROUNDED AT BOTH SECONDARY AND PRIMARY SWITCHES.

7. PAYMENT - ALL MATERIALS AND WORK REQUIRED TO COMPLETE THE EFFECTIVE GROUND FAULT CURRENT PATH SYSTEM ARE INCIDENTAL TO THE CONDUCTORS INSTALLED BY CONTRACT.

GUARANTEE

THE CONTRACTOR SHALL GUARANTEE THAT THE TRAFFIC CONTROL SYSTEM INSTALLED AS PART OF THIS CONTRACT SHALL OPERATE SATISFACTORILY FOR A PERIOD OF 120 DAYS FOLLOWING COMPLETION OF THE 10-DAY PERFORMANCE TEST. IN THE EVENT OF UNSATISFACTORY OPERATION THE CONTRACTOR SHALL CORRECT FAULTY INSTALLATIONS, MAKE REPAIRS AND REPLACE DEFECTIVE PARTS WITH NEW PARTS OF EQUAL OR BETTER QUALITY.

EQUIPMENT, MATERIAL AND LABOR COSTS INCURRED IN CORRECTING AN UNSATISFACTORY OPERATION SHALL BE BORNE BY THE CONTRACTOR.

THE GUARANTEE SHALL COVER THE FOLLOWING ITEMS OF THE TRAFFIC CONTROL SYSTEM: CONTROLLER, CABINET, UNINTERRUPTIBLE POWER SUPPLY, VEHICLE DETECTION EQUIPMENT, LED LAMP UNITS, NETWORK AND COMMUNICATION/ INTERCONNECT EQUIPMENT.

CUSTOMARY MANUFACTURER'S GUARANTEES FOR THE FOREGOING ITEMS SHALL BE TURNED OVER TO THE STATE OR THE MAINTAINING AGENCY FOLLOWING ACCEPTANCE OF THE EQUIPMENT.

THE COST OF GUARANTEEING THE TRAFFIC CONTROL SYSTEM WILL BE INCIDENTAL TO AND INCLUDED IN THE CONTRACT UNIT PRICE OF THE VARIOUS ITEMS MAKING UP THE SYSTEM.

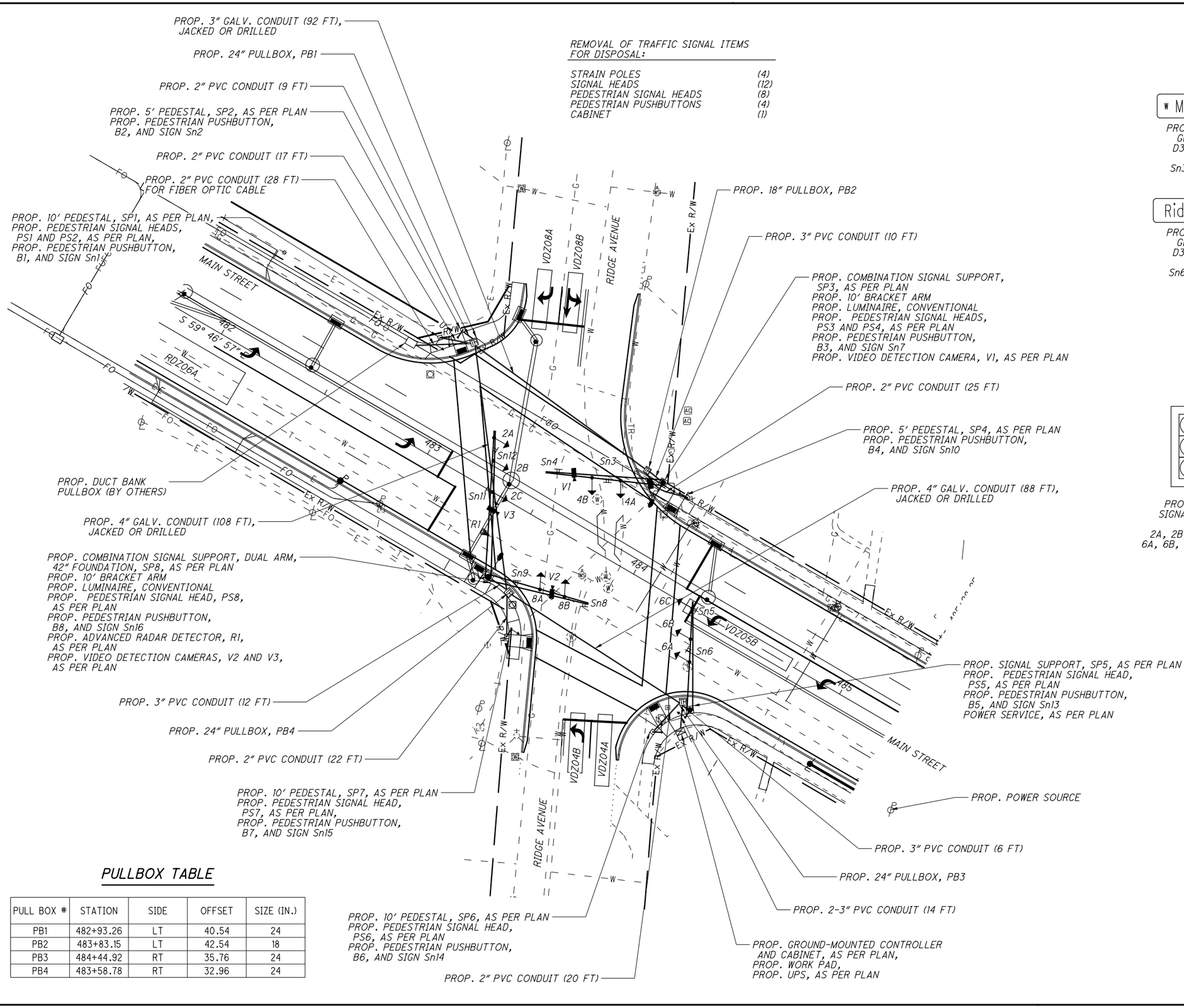

REMOVAL OF TRAFFIC SIGNAL ITEMS FOR DISPOSAL:

STRAIN POLES	(4)
SIGNAL HEADS	(12)
PEDESTRIAN SIGNAL HEADS	(8)
PEDESTRIAN PUSHBUTTONS	(4)
CABINET	(1)

SIGNS

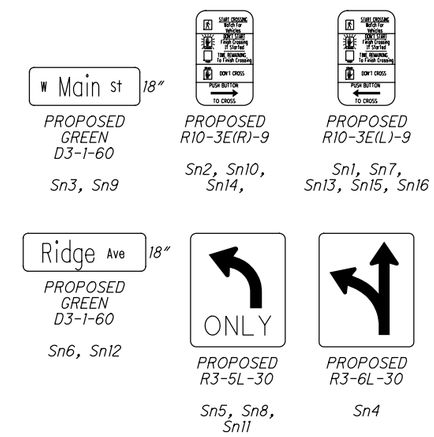

SIGNAL HEADS

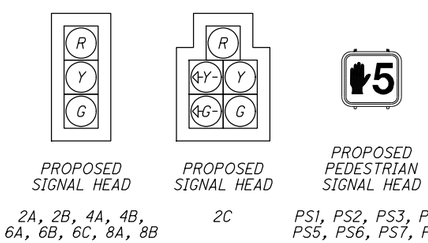

PULLBOX TABLE

PULL BOX #	STATION	SIDE	OFFSET	SIZE (IN.)
PB1	482+93.26	LT	40.54	24
PB2	483+83.15	LT	42.54	18
PB3	484+44.92	RT	35.76	24
PB4	483+58.78	RT	32.96	24

LEGEND

	PROP	EXIST
TRAFFIC SIGNAL, 3 UNIT HEAD, 12"		
TRAFFIC SIGNAL, 4 OR 5 UNIT HEAD, 12"		
SIGNAL SUPPORT POLE		
PEDESTRIAN SIGNAL		
PEDESTRIAN PUSH BUTTON		
PEDESTAL SUPPORT		
LUMINAIRE		
CONTROLLER CABINET AND WORK PAD (TS-1)		
TRAFFIC PULL BOX		
DILEMMA ZONE RADAR DETECTION UNIT		
VIDEO DETECTION CAMERA		
DETECTOR ZONE		

HORIZONTAL SCALE IN FEET 0 10 20 40

CALCULATED GSH
CHECKED KRM

TRAFFIC SIGNAL PLAN
RIDGE AVENUE & MAIN STREET

MIA-41-09.49

L:\Troy OH\19060901-00_WestMainCorridorImprov\108662\Roadway\Sheets\08662CP100.dgn 1/26/2022 5:21:02 PM ghansel

SIGNAL TIMING CHART (TEM FORM 496-3)

INTERSECTION: RIDGE AVENUE & MAIN STREET
MAINTAINING AGENCY: CITY OF TROY

START UP								
START IN: ALL-RED FLASH	DUAL ENTRY:	YES	PHASES:			2&6, 4&8		
TIME FOR: FLASH , ALL RED (SEC.): 9, 6	REST IN RED:		RING 1	-		RING 2	-	
FIRST PHASE(S): 2, 6	OVERLAP			A	B	C	D	
COLOR DISPLAYED: YELLOW	PHASES			-	-	-	-	

INTERVAL OR FEATURE	CONTROLLER MOVEMENT NO.							
INTERSECTION MOVEMENT (PHASE)	1	2	3	4	5	6	7	8
DIRECTION	-	WB	-	NB	WB-LT	EB	-	SB
MINIMUM GREEN (INITIAL) (SEC.)	-	30	-	10	7	30	-	10
ADDED INITIAL *(SEC./ACTUATION)	-	-	-	-	-	-	-	-
MAXIMUM INITIAL (SEC.)	-	-	-	-	-	-	-	-
PASSAGE TIME (PRESET GAP) (SEC.)	-	-	-	3	1	-	-	3
TIME BEFORE REDUCTION *(SEC.)	-	-	-	-	-	-	-	-
MINIMUM GAP *(SEC.)	-	-	-	-	-	-	-	-
TIME TO REDUCE *(SEC.)	-	-	-	-	-	-	-	-
MAXIMUM GREEN I (SEC.)	-	45	-	30	20	45	-	30
MAXIMUM GREEN II (SEC.)	-	45	-	30	20	45	-	30
YELLOW CHANGE (SEC.)	-	4.4	-	3.4	3.0	4.4	-	3.4
ALL RED CLEARANCE (SEC.)	-	1.0	-	1.6	1.2	1.0	-	1.6
DELAYED GREEN (LPI) ** (SEC.)	-	-	-	-	-	-	-	-
FLASHING YELLOW ARROW DELAY * (SEC.)	-	-	-	-	-	-	-	-
WALK (SEC.)	-	11	-	11	-	11	-	11
PEDESTRIAN CLEARANCE (SEC.)	-	25	-	23	-	25	-	23
RECALL MAXIMUM (ON/OFF)	-	OFF	-	OFF	OFF	OFF	-	OFF
RECALL MINIMUM (ON/OFF)	-	ON	-	ON	OFF	ON	-	ON
RECALL PEDESTRIAN (ON/OFF)	-	OFF	-	OFF	OFF	OFF	-	OFF
MEMORY (ON/OFF)	-	-	-	-	-	-	-	-

* VOLUME DENSITY CONTROLS

** FOR CROSSING WITH PEDESTRIAN PUSHBUTTONS, LPI'S (LEADING PEDESTRIAN INTERVALS) MAY BE IMPLEMENTED (3-6 SEC.) IN ACCORDANCE WITH LPI DURATION TIME PER THE ODOT SIGNAL CALCULATIONS - CLEARANCE INTERVALS SPREADSHEET.

NOTES:

- ϕ5 SHALL BE ACTUATED. THE PRIMARY THRU AND SIDE STREET MOVEMENTS SHOULD HAVE MIN RECALL ACTIVE TO AVOID YELLOW BALL TRAP.
- FOR PROTECTED/PERMISSIVE PHASES, IMPLEMENT CALL OMITS TO AVOID YELLOW BALL TRAP.
- ENABLE ϕ5 DETECTOR SWITCHING TO ALLOW ϕ5 TO EXTEND ϕ2, WHEN ALLOCATED GREEN TIME FOR LEFT TURN PHASES ARE EXHAUSTED.
- COUNTDOWN PEDESTRIAN SIGNALS SHALL GO TO ZERO ON YELLOW PER OMUTCD FIGURE 4E-2.
- ALL DETECTOR DELAYS SHALL BE PLACED IN THE CONTROLLER.

PHASING DIAGRAM

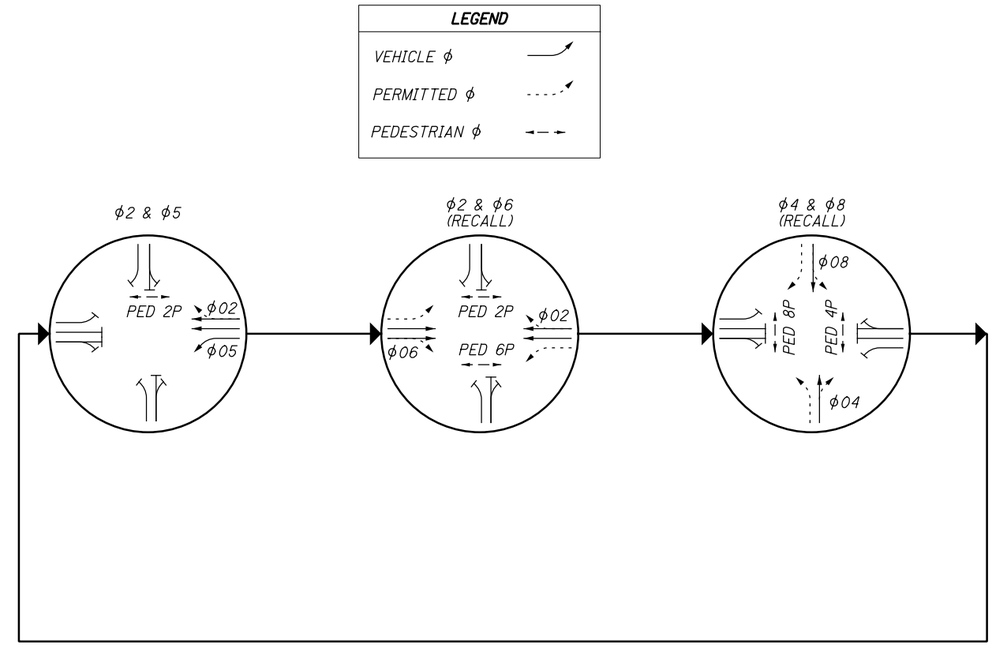

DETECTION CHART (TEM FORM 496-4)

DETECTION ZONE	MOVEMENT	PULSE OR PRESENCE	ASSOCIATED PHASE	DELAY PROGRAMMED IN CONTROLLER (SEC.)	EXTENSION PROGRAMMED IN CONTROLLER (SEC.)	DETECTOR NO.	PURPOSE	DETECTION ZONE LENGTH (FT)
VDZ04A	NB	PRESENCE	4	-	-	V1	SL	30
VDZ04B	NB-LT	PRESENCE	4	2	-	V1	SL	25
RDZ06A	EB	PRESENCE	6	-	-	R1	ADV	400
VDZ05A	WB-LT	PRESENCE	5	2	-	V3	SL	50
VDZ08A	SB-RT	PRESENCE	8	10	-	V2	SL	25
VDZ08B	SB-LT-Thru	PRESENCE	8	2	-	V2	SL	25

NOTE: ADVANCED DILEMMA ZONE SPEED THRESHOLD SHALL BE GREATER THAN OR EQUAL TO 30 MPH
PURPOSE: STOP-LINE OR ADVANCED DETECTION

CALCULATED GSH
CHECKED KRM

TRAFFIC SIGNAL DETAILS
RIDGE AVENUE & MAIN STREET

MIA-41-09.49

L:\TroyOH\19060901-00_WestMainCorridorImprov\108662\Roadway\Sheets\08662CP101.dgn 1/26/2022 5:23:21 PM ghansel

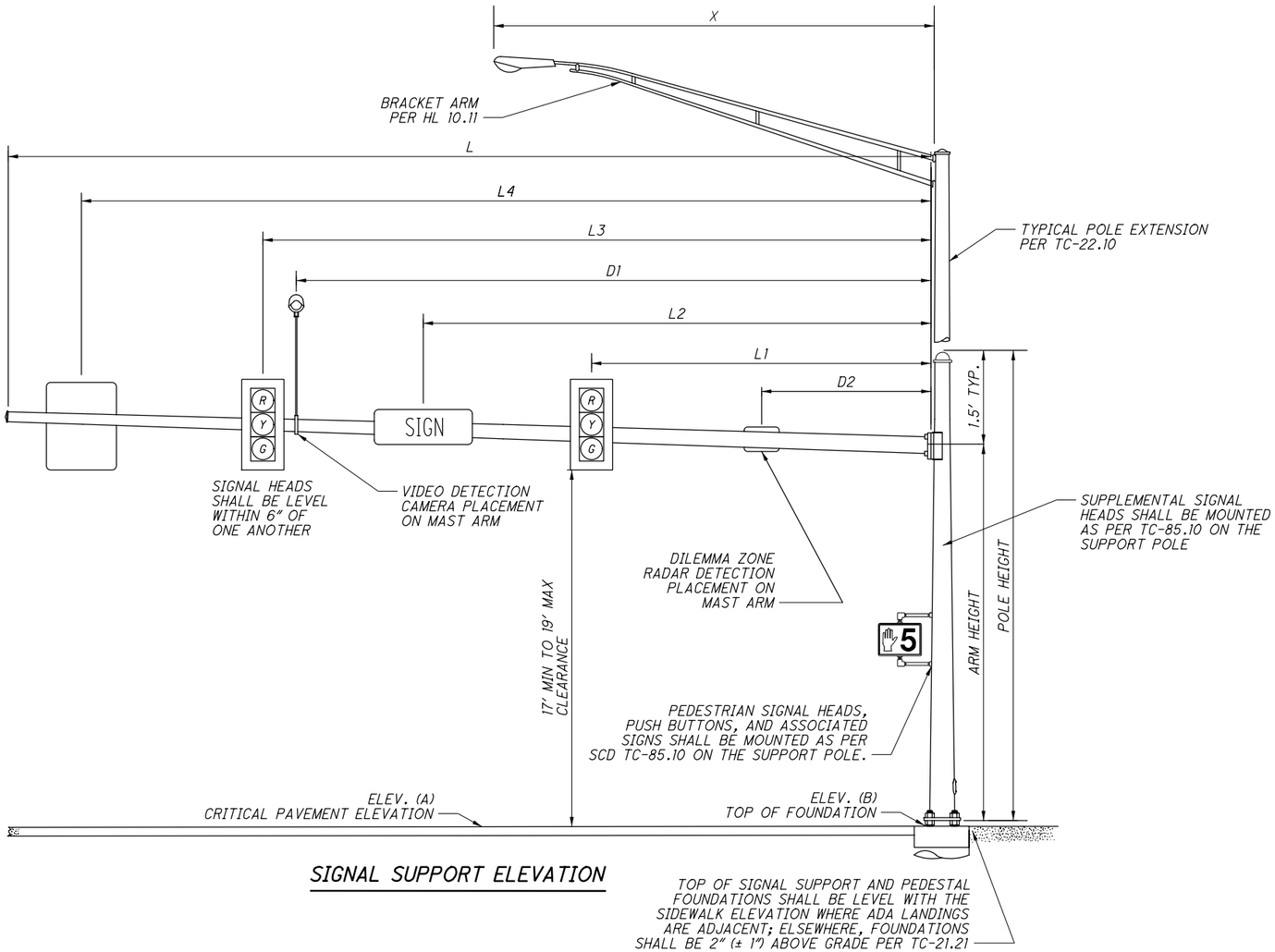

SIGNAL SUPPORT ELEVATION

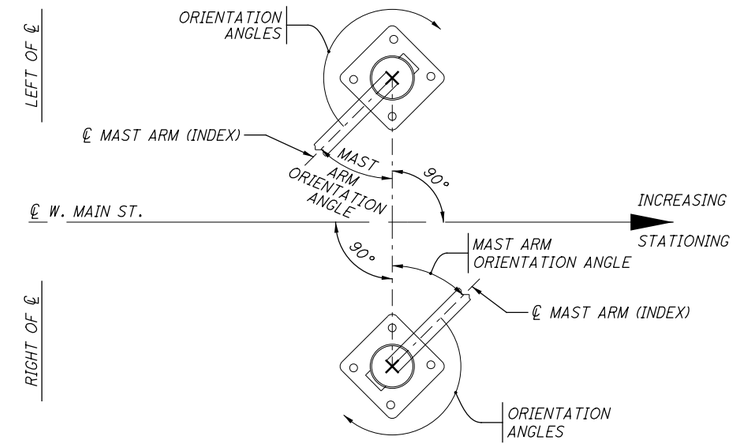

SIGNAL POLE ORIENTATION

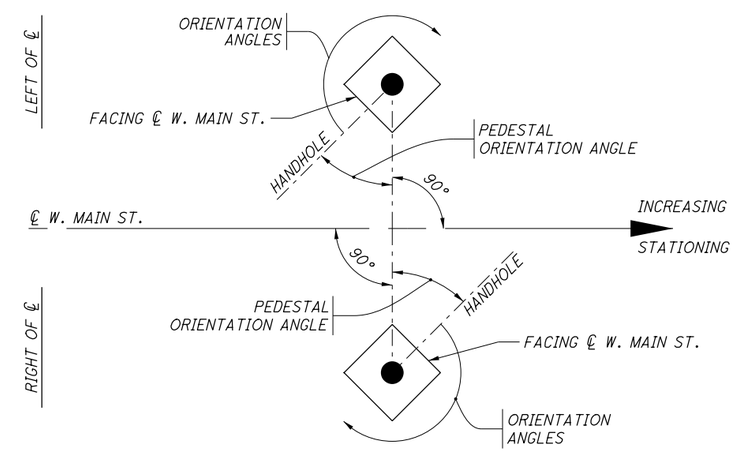

PEDESTAL ORIENTATION

MAST ARM TABLE (TEM FIGURE 498-37 & 38)

SUPPORT NO.	STATION	OFFSET	TYPE	ELEVATION A (Pavt. Elev.)	ELEVATION B (Top of Found.)	SUPPORT DETAILS DESIGN TYPE	DESIGN NO.	POLE HEIGHT	ARM HEIGHT	L	L1	L2	L3	L4	L5	D1	D2	X	ORIENTATION ANGLES (SEE FIGURES ABOVE FOR DETAILS) MAST ARM A ANGLE	MAST ARM B ANGLE	PEDESTAL ANGLE	PEDESTRIAN SIGNAL	PEDESTRIAN PUSHBUTTON	POWER SERVICE	BRACKET ARM	HANDHOLE	CABLE ENTRANCE 12" FROM TOP
								FT	FT	FT	FT	FT	FT	FT	FT		FT	FT	DEG	DEG	DEG	DEG	DEG	DEG	DEG	DEG	DEG
SP-3	483+91.46	39.35 LT	SIGNAL	830.79	830.30	TC-81.22	12	30	20	46	17	22	29	43	-	36	-	10	65	-	-	180 / 300	300	-	300	180	-
SP-5	484+49.07	37.29 RT	SIGNAL	830.34	829.57	TC-81.22	12	21.5	20	44	19	23	28	41	41	-	-	-	330	-	-	210	210	135	-	180	135
SP-8A	483+48.00	31.78 RT	SIGNAL	832.04	831.39	TC-12.31	10	30	20	42	11	21	32	41	-	26	-	10	75	-	-	160	160	-	285	180	-
SP-8B										60	35	35	53	48	57	27	16		-	330	ANGLES RELATIVE TO MAST ARM SP-8A						
SP-1	482+80.04	44.92 LT	PEDESTAL	-	832.46	DOES NOT APPLY		10	DOES NOT APPLY TO PEDESTAL SUPPORTS												310	50 / 290	290	-	-	0	-
SP-2	482+86.61	52.45 LT	PEDESTAL	-	832.23			5													310	-	50	-	-	0	-
SP-4	484+03.40	39.10 LT	PEDESTAL	-	830.29			5													0	-	90	-	-	0	-
SP-6	484+40.30	53.12 RT	PEDESTAL	-	829.41			10													10	50	50	-	-	0	-
SP-7	483+67.20	49.31 RT	PEDESTAL	-	830.55			10													330	30	30	-	-	0	-

CALCULATED GSH
CHECKED KRM

TRAFFIC SIGNAL DETAILS
RIDGE AVENUE & MAIN STREET

MIA-41-09.49

L:\TroyOH\19060901-00_WestMainCorridorImprov\108662\Roadway\Sheets\08662CP102.dgn 1/26/2022 5:23:32 PM ghansel

WIRING DIAGRAM

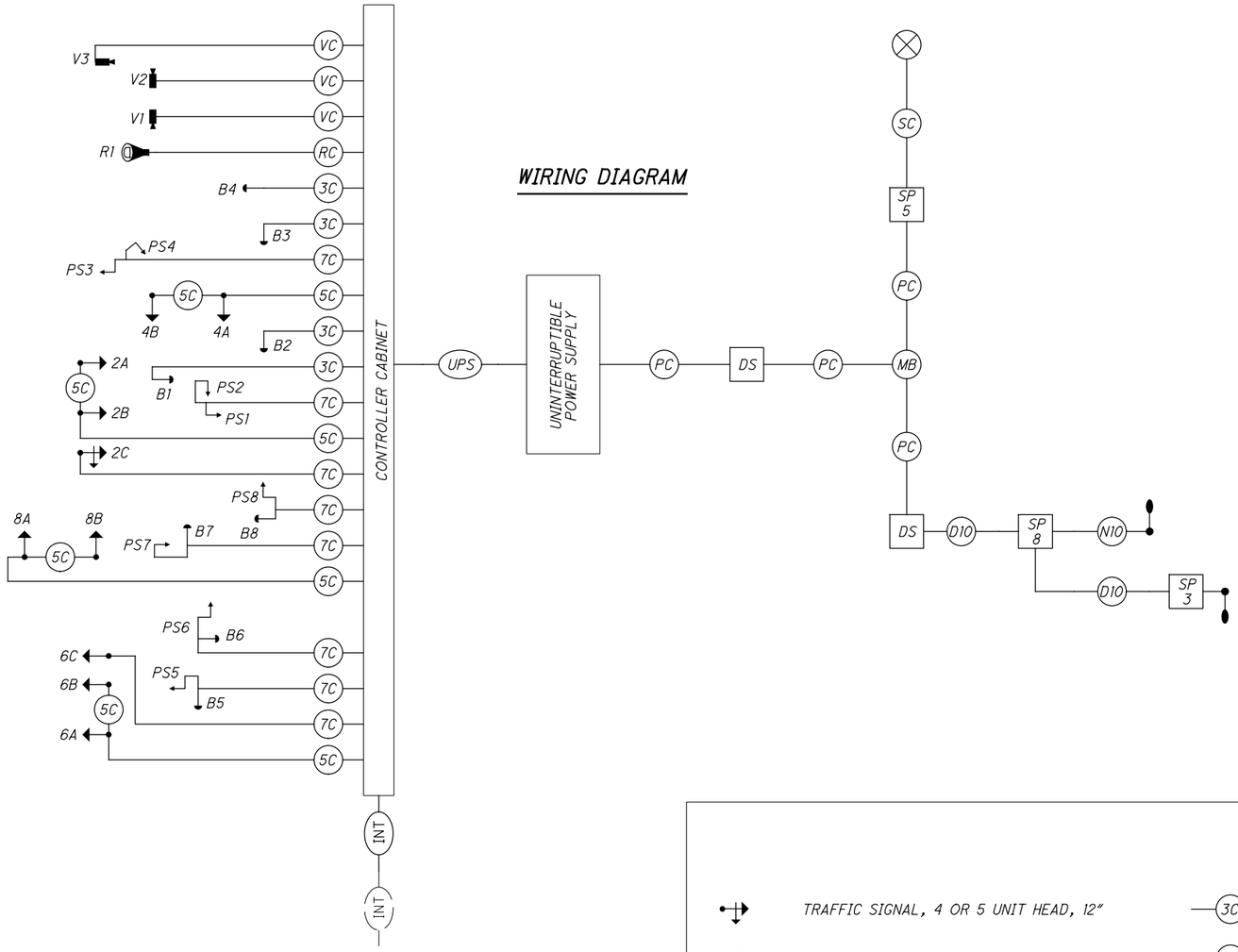

FIELD WIRING HOOK-UP CHART (TEM FORM 496-16)

SIGNAL HEAD	INDICATION	FIELD TERMINAL	FLASH
2A, 2B (WB)	R	ϕ2 R	R
	Y	ϕ2 Y	
	G	ϕ2 G	
2C (WB LT)	R	ϕ2 R	R
	Y	ϕ2 Y	
	G	ϕ2 G	
	<--Y---	ϕ5 Y	
	<--G---	ϕ5 G	
4A, 4B (NB)	R	ϕ4 R	R
	Y	ϕ4 Y	
	G	ϕ4 G	
6A, 6B, 6C (EB)	R	ϕ6 R	R
	Y	ϕ6 Y	
	G	ϕ6 G	
LS = LOAD SWITCH			

SIGNAL HEAD	INDICATION	FIELD TERMINAL	FLASH
8A, 8B (SB)	R	ϕ8 R	R
	Y	ϕ8 Y	
	G	ϕ8 G	
PEDESTRIAN MOVEMENTS			
PED 2P NORTH	W	ϕ2 PED / LS 10 G	OUT
	DW	ϕ2 PED / LS 10 R	
PED 4P EAST	W	ϕ4 PED / LS 11 G	OUT
	DW	ϕ4 PED / LS 11 R	
PED 6P SOUTH	W	ϕ6 PED / LS 12 G	OUT
	DW	ϕ6 PED / LS 12 R	
PED 8P WEST	W	ϕ8 PED / LS 13 G	OUT
	DW	ϕ8 PED / LS 13 R	
NO OVERLAPS			

NOTES:

- FOR LOCATIONS WITH LEFT TURN LANES RUN 7C FOR POTENTIAL PT/PM LT PHASE IF INITIAL DESIGN IS FOR PERMITTED ONLY.
- OVERLAPS SHALL BE WIRED TO THE APPROPRIATE LOAD SWITCHES AS PER THE FIELD HOOKUP CHART AND CONFIGURED IN THE CONTROLLER SOFTWARE PER THE SIGNAL TIMING CHART.
- FIBER OPTIC CONNECTIONS TO BE DONE BY OTHERS.

LEGEND

- TRAFFIC SIGNAL, 4 OR 5 UNIT HEAD, 12"
- TRAFFIC SIGNAL, 2 UNIT, 3 UNIT, OR PHB HEAD 12"
- TRAFFIC SIGNAL, 3 UNIT HEAD, 12" WITH ARROWS
- PEDESTRIAN SIGNAL
- PEDESTRIAN PUSH BUTTON
- DILEMMA ZONE RADAR DETECTION UNIT
- VIDEO DETECTION CAMERA
- LUMINAIRE
- TWIN LIGHT POLE
- 3C — SIGNAL CABLE, 3 CONDUCTOR, NO. 14 AWG
- 5C — SIGNAL CABLE, 5 CONDUCTOR, NO. 14 AWG
- 7C — SIGNAL CABLE, 7 CONDUCTOR, NO. 14 AWG
- RC — RADAR DETECTION CABLE
- VC — VIDEO DETECTION CAMERA CABLE
- INT — PROP. FIBER CONNECTION (BY OTHERS)
- INT — Ex. Fiber Connection
- POWER SOURCE
- DUPLEX GFCI RECEPTACLE WITH IN-USE COVER
- SC — SERVICE CABLE, 3 CONDUCTOR, NO. 8 AWG
- PC — POWER CABLE, 2 CONDUCTOR, NO. 6 AWG
- SP 1 — SIGNAL SUPPORT POLE NO. __
- MB — METER BASE
- D10 — THREE RUNS OF NO. 10 AWG 600 VOLT DISTRIBUTION CABLE
- N10 — THREE RUNS OF NO. 10 AWG POLE & BRACKET CABLE
- DS — DISCONNECT SWITCH
- UPS — UNINTERRUPTIBLE POWER SUPPLY CABLE

CALCULATED GSH
CHECKED KRM

TRAFFIC SIGNAL DETAILS
RIDGE AVENUE & MAIN STREET

MIA-41-09.49

L:\TroyOH\19060901-00_WestMainCorridorImprov\108662\Roadway\Sheets\08662CP103.dgn 1/26/2022 5:23:40 PM ghansel

SUBSUMMARY

ITEM	QUAN.	UNIT	DESCRIPTION
625	2	EACH	CONNECTION, FUSED PULL APART
625	2	EACH	CONNECTION, UNFUSED PULL APART
625	2	EACH	BRACKET ARM, 10′
625	1000	FT	NO. 10 AWG 600 VOLT DISTRIBUTION CABLE
625	300	FT	NO. 10 AWG POLE AND BRACKET CABLE
625	121	FT	CONDUIT, 2″, 725.05
625	56	FT	CONDUIT, 3″, 725.05
625	92	FT	CONDUIT, JACKED OR DRILLED, 3″, 725.04
625	196	FT	CONDUIT, JACKED OR DRILLED, 4″, 725.04
625	2	EACH	LUMINAIRE, CONVENTIONAL, SOLID STATE (LED), 194W, TYPE III, 240V
625	163	FT	TRENCH
625	1	EACH	PULL BOX, 725.08, 18″
625	3	EACH	PULL BOX, 725.08, 24″
625	9	EACH	GROUND ROD
625	163	FT	UNDERGROUND WARNING/MARKING TAPE
630	8	EACH	SIGN HANGER ASSEMBLY, MAST ARM, AS PER PLAN
630	30	SF	SIGN, FLAT SHEET
630	4	EACH	SIGN, STREET NAME
632	9	EACH	VEHICULAR SIGNAL HEAD, (LED), 3-SECTION, 12″ LENS, 1-WAY, POLYCARBONATE, AS PER PLAN, BLACK, WITH BACKPLATE
632	1	EACH	VEHICULAR SIGNAL HEAD, (LED), 5-SECTION, 12″ LENS, 1-WAY, POLYCARBONATE, AS PER PLAN, BLACK, WITH BACKPLATE
632	8	EACH	PEDESTRIAN SIGNAL HEAD (LED), TYPE D2, COUNTDOWN, AS PER PLAN
632	10	EACH	COVERING OF VEHICULAR SIGNAL HEAD
632	8	EACH	COVERING OF PEDESTRIAN SIGNAL HEAD
632	8	EACH	PEDESTRIAN PUSHBUTTON
632	1200	FT	SIGNAL CABLE, 3 CONDUCTOR, NO. 14 AWG
632	1000	FT	SIGNAL CABLE, 5 CONDUCTOR, NO. 14 AWG
632	1350	FT	SIGNAL CABLE, 7 CONDUCTOR, NO. 14 AWG
632	4	EACH	SIGNAL SUPPORT FOUNDATION
632	5	EACH	PEDESTAL FOUNDATION
632	70	FT	POWER CABLE, 3 CONDUCTOR, NO. 6 AWG
632	80	FT	SERVICE CABLE, 3 CONDUCTOR, NO. 8 AWG
632	1	EACH	POWER SERVICE, AS PER PLAN
632	1	EACH	SIGNAL SUPPORT, TYPE TC-81.22, DESIGN 12, AS PER PLAN
632	1	EACH	COMBINATION SIGNAL SUPPORT, TYPE TC-12.31 DESIGN 10 POLE, WITH MAST ARMS TC-81.22 DESIGN 13 AND DESIGN 12, AS PER PLAN
632	1	EACH	COMBINATION SIGNAL SUPPORT, TYPE TC-81.22, DESIGN 12, AS PER PLAN
632	2	EACH	PEDESTAL, 5′, TRANSFORMER BASE, AS PER PLAN
632	3	EACH	PEDESTAL, 10′, TRANSFORMER BASE, AS PER PLAN
632	1	EACH	REMOVAL OF TRAFFIC SIGNAL INSTALLATION
633	1	EACH	CABINET FOUNDATION
633	1	EACH	CONTROLLER WORK PAD
633	1	EACH	UNINTERRUPTIBLE POWER SUPPLY (UPS), 1000 WATT, AS PER PLAN
633	1	EACH	CONTROLLER ITEM, MISC.: CABINET, TYPE TS-1, AS PER PLAN
633	1	EACH	CONTROLLER ITEM, MISC.: 10/100/1000 ETHERNET SWITCH, AS PER PLAN
809	1	EACH	ADVANCE RADAR DETECTION, AS PER PLAN
809	1	EACH	ATC V6.24 CONTROLLER, AS PER PLAN
ALTERNATE BID ITEMS			
816	1	EACH	VIDEO DETECTION SYSTEM, AS PER PLAN (ALTERNATE BID A)
816	1	EACH	VIDEO DETECTION SYSTEM, AS PER PLAN (ALTERNATE BID B)

CALCULATED GSH
CHECKED KRM

TRAFFIC SIGNAL DETAILS
RIDGE AVENUE & MAIN STREET

MIA-41-09.49

L:\TroyOH\19060901-00_WestMainCorridorImprov\108662\Roadway\Sheets\08662CP104.dgn 1/26/2022 5:23:52 PM ghansel

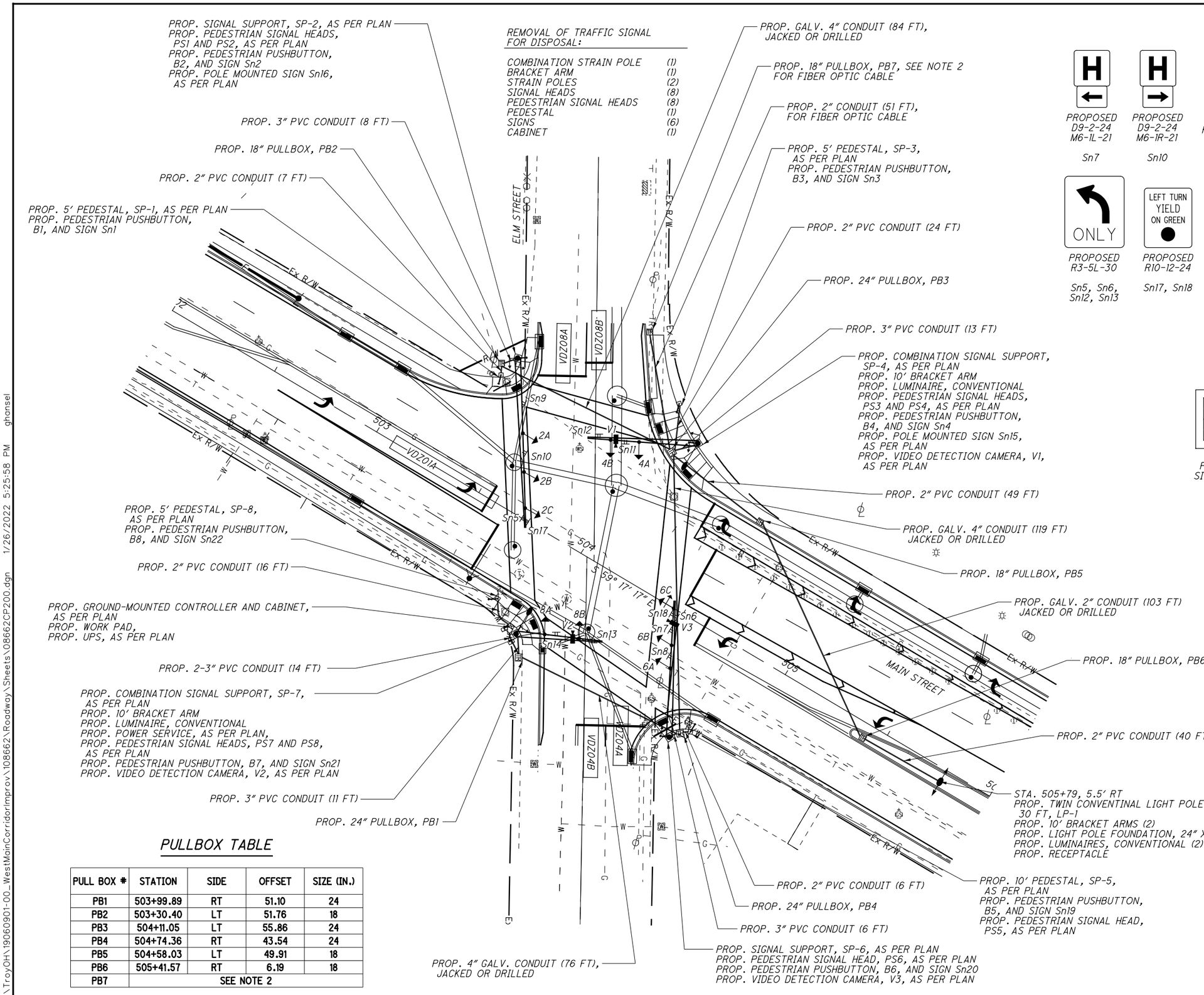

REMOVAL OF TRAFFIC SIGNAL FOR DISPOSAL:

COMBINATION STRAIN POLE	(1)
BRACKET ARM	(1)
STRAIN POLES	(2)
SIGNAL HEADS	(8)
PEDESTRIAN SIGNAL HEADS	(8)
PEDESTAL	(1)
SIGNS	(6)
CABINET	(1)

SIGNS

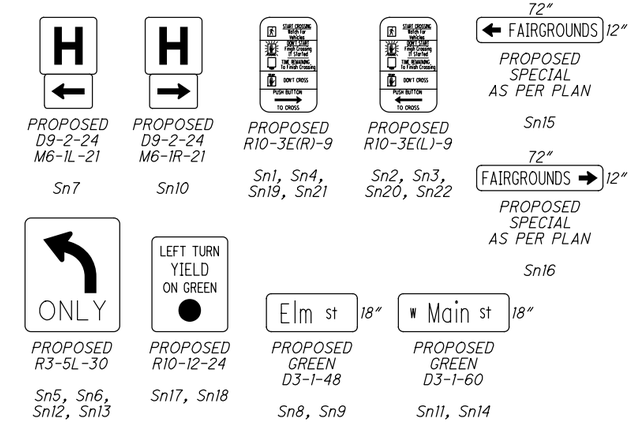

SIGNAL HEADS

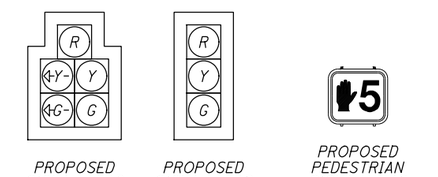

NOTES:

1. POWER SHALL BE OBTAINED FROM EX. TRANSFORMER AT STA. 501+35, 38' LT.

2. CONTRACTOR TO COORDINATE WITH METRONET TO OBTAIN EXACT METRONET CONDUIT LOCATION THAT CONCIDES WITH EX. TERMINAL.

PULLBOX TABLE

PULL BOX #	STATION	SIDE	OFFSET	SIZE (IN.)
PB1	503+99.89	RT	51.10	24
PB2	503+30.40	LT	51.76	18
PB3	504+11.05	LT	55.86	24
PB4	504+74.36	RT	43.54	24
PB5	504+58.03	LT	49.91	18
PB6	505+41.57	RT	6.19	18
PB7	SEE NOTE 2			

LEGEND

	PROP	EXIST
TRAFFIC SIGNAL, 3 UNIT HEAD, 12"		
SIGNAL SUPPORT POLE		
PEDESTRIAN SIGNAL		
PEDESTRIAN PUSH BUTTON		
PEDESTAL SUPPORT		
LUMINAIRE		
TWIN LIGHT POLE		
CONTROLLER CABINET AND WORK PAD (TS-1)		
TRAFFIC PULL BOX		
VIDEO DETECTION CAMERA		
DETECTOR ZONE		

HORIZONTAL SCALE IN FEET 0 10 20 40

CALCULATED GSH
CHECKED KRM

TRAFFIC SIGNAL PLAN
ELM STREET & MAIN STREET

MIA-41-09.49

L:\TroyOH\19060901-00_WestMainCorridorImprov\108662\Roadway\Sheets\08662CP200.dgn 1/26/2022 5:25:58 PM ghansel

SIGNAL TIMING CHART (TEM FORM 496-3)

INTERSECTION: ELM STREET & MAIN STREET
MAINTAINING AGENCY: CITY OF TROY

START UP

START IN: ALL-RED FLASH
TIME FOR: FLASH , ALL RED (SEC.): 9, 6
FIRST PHASE(S): 2, 6
COLOR DISPLAYED: YELLOW

DUAL ENTRY: YES	PHASES:			2&6, 4&8		
REST IN RED:	RING 1	-		RING 2	-	
OVERLAP		A	B	C	D	
PHASES		-	-	-	-	

INTERVAL OR FEATURE		CONTROLLER MOVEMENT NO.							
INTERSECTION MOVEMENT (PHASE)		1	2	3	4	5	6	7	8
DIRECTION		EB LT	WB	-	NB	-	EB	-	SB
MINIMUM GREEN (INITIAL)	(SEC.)	7	20	-	10	-	20	-	10
ADDED INITIAL	*(SEC./ACTUATION)	-	-	-	-	-	-	-	-
MAXIMUM INITIAL	(SEC.)	-	-	-	-	-	-	-	-
PASSAGE TIME (PRESET GAP)	(SEC.)	1	-	-	3	-	-	-	3
TIME BEFORE REDUCTION	*(SEC.)	-	-	-	-	-	-	-	-
MINIMUM GAP	*(SEC.)	-	-	-	-	-	-	-	-
TIME TO REDUCE	*(SEC.)	-	-	-	-	-	-	-	-
MAXIMUM GREEN I	(SEC.)	20	45	-	30	-	45	-	30
MAXIMUM GREEN II	(SEC.)	20	45	-	30	-	45	-	30
YELLOW CHANGE	(SEC.)	3	4.1	-	3.4	-	4.1	-	3.4
ALL RED CLEARANCE	(SEC.)	1.2	1.0	-	1.7	-	1.0	-	1.7
DELAYED GREEN (LPI) **	(SEC.)	-	-	-	-	-	-	-	-
FLASHING YELLOW ARROW DELAY *	(SEC.)	-	-	-	-	-	-	-	-
WALK	(SEC.)	-	10	-	12	-	10	-	12
PEDESTRIAN CLEARANCE	(SEC.)	-	15	-	26	-	15	-	26
RECALL	MAXIMUM (ON/OFF)	OFF	OFF	-	OFF	-	OFF	-	OFF
	MINIMUM (ON/OFF)	OFF	ON	-	ON	-	ON	-	ON
	PEDESTRIAN (ON/OFF)	OFF	OFF	-	OFF	-	OFF	-	OFF
MEMORY	(ON/OFF)	-	-	-	-	-	-	-	-

* VOLUME DENSITY CONTROLS

** FOR CROSSING WITH PEDESTRIAN PUSHBUTTONS, LPI'S (LEADING PEDESTRIAN INTERVALS) MAY BE IMPLEMENTED (3-6 SEC.) IN ACCORDANCE WITH LPI DURATION TIME PER THE ODOT SIGNAL CALCULATIONS - CLEARANCE INTERVALS SPREADSHEET.

NOTES:

- ϕ1 SHALL BE ACTUATED. THE PRIMARY THRU AND SIDE STREET MOVEMENTS SHOULD HAVE MIN RECALL ACTIVE TO AVOID YELLOW BALL TRAP.
- ENABLE ϕ1 DETECTOR SWITCHING TO ALLOW ϕ1 TO EXTEND ϕ6, WHEN ALLOCATED GREEN TIME FOR LEFT TURN PHASES ARE EXHAUSTED.
- COUNTDOWN PEDESTRIAN SIGNALS SHALL GO TO ZERO ON YELLOW PER OMUTCD FIGURE 4E-2.
- ALL DETECTOR DELAYS SHALL BE PLACED IN THE CONTROLLER.

PHASING DIAGRAM

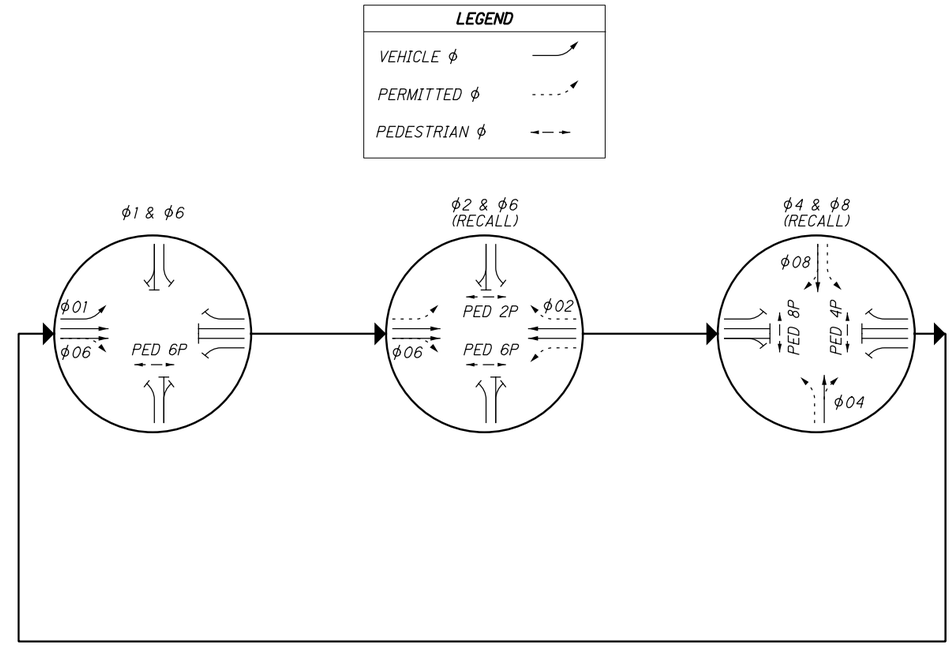

VIDEO DETECTION CHART (TEM FORM 496-4)

DETECTION ZONE	MOVEMENT	PULSE OR PRESENCE	ASSOCIATED PHASE	DELAY PROGRAMMED IN CONTROLLER (SEC.)	EXTENSION PROGRAMMED IN CONTROLLER (SEC.)	DETECTOR NO.	PURPOSE	DETECTION ZONE LENGTH (FT)
VDZ01A	EB-LT	PRESENCE	1	2	-	V3	SL	50
VDZ04A	NB	PRESENCE	4	-	-	V1	SL	25
VDZ04B	NB-LT	PRESENCE	4	2	-	V1	SL	25
VDZ08A	SB	PRESENCE	8	-	-	V2	SL	25
VDZ08B	SB-LT	PRESENCE	8	2	-	V2	SL	25

PURPOSE: STOP-LINE OR ADVANCED DETECTION

CALCULATED GSH
CHECKED KRM

TRAFFIC SIGNAL DETAILS
ELM STREET & MAIN STREET

MIA-41-09.49

L:\TroyOH\19060901-00_WestMainCorridorImprov\108662\Roadway\Sheets\08662CP201.dgn 1/26/2022 5:26:09 PM ghansel

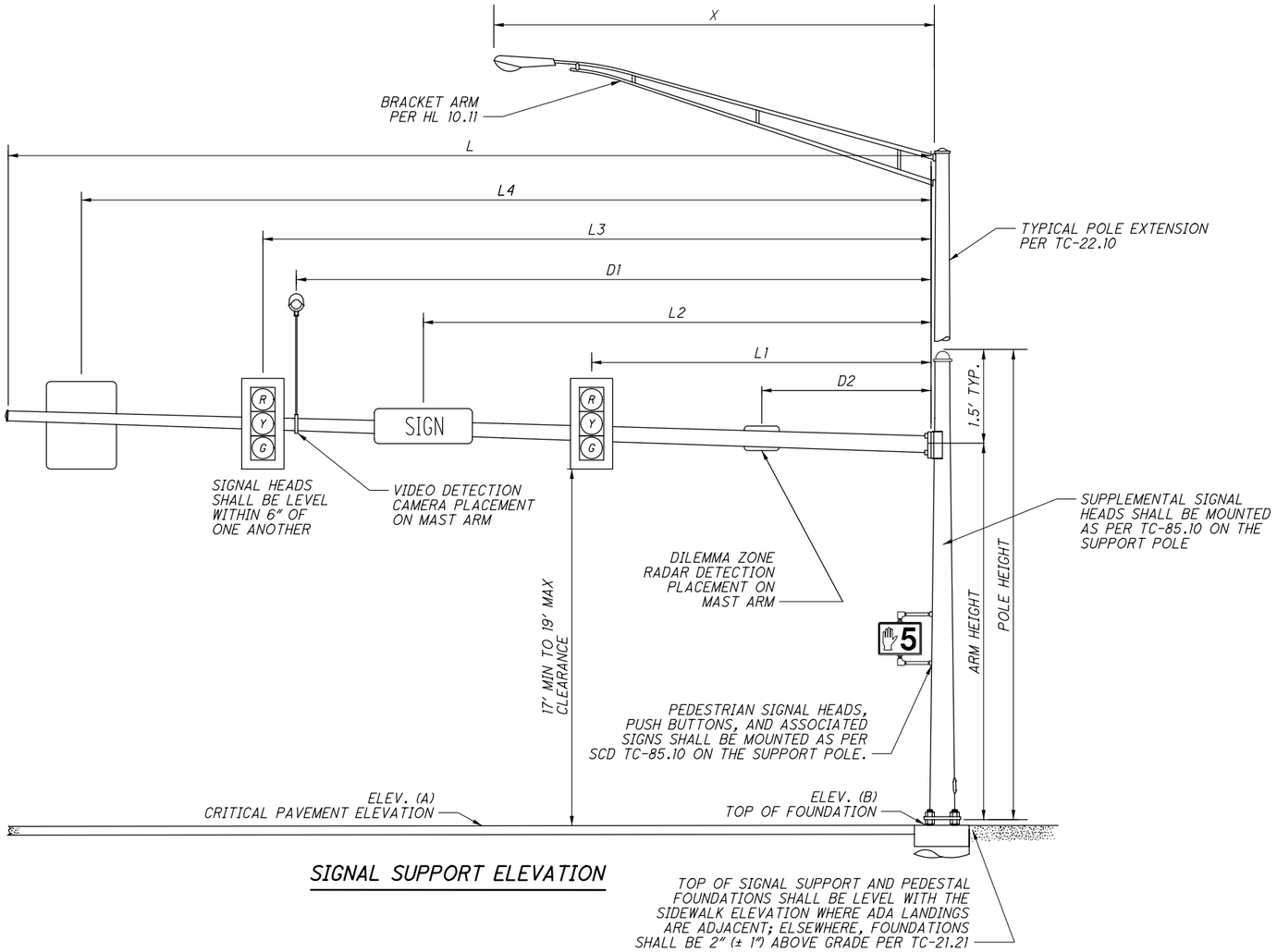

SIGNAL SUPPORT ELEVATION

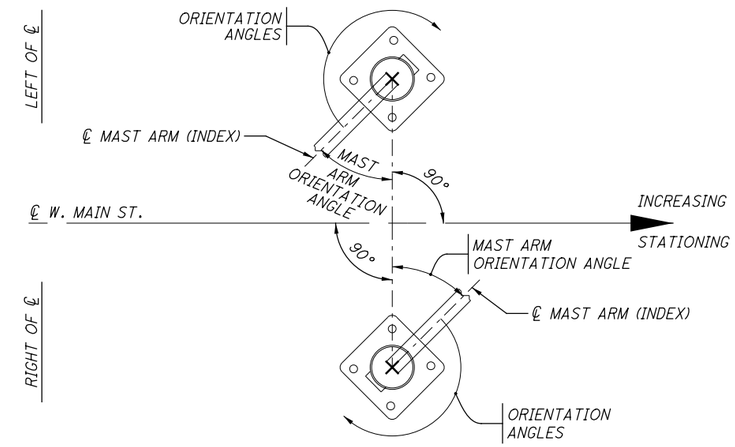

SIGNAL POLE ORIENTATION

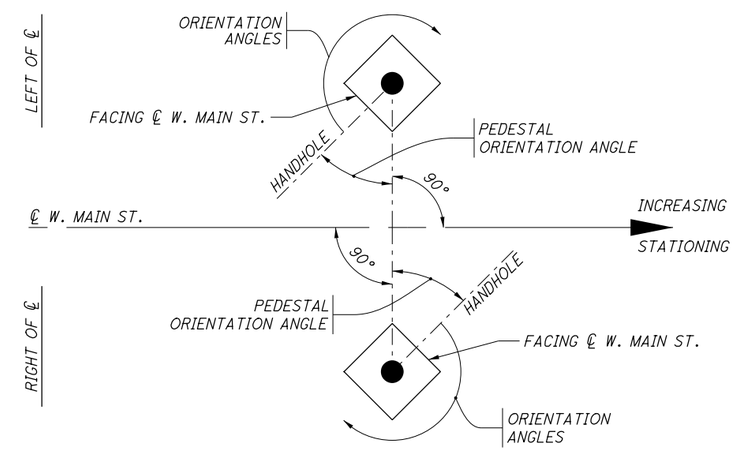

PEDESTAL ORIENTATION

MAST ARM TABLE (TEM FIGURE 498-37 & 38)

SUPPORT NO.	STATION	OFFSET	TYPE	ELEVATION A (Pavt. Elev.)	ELEVATION B (Top of Found.)	SUPPORT DETAILS: DESIGN TYPE	DESIGN NO.	POLE HEIGHT	ARM HEIGHT	L	L1	L2	L3	L4	L5	L6	L7	D1	D2	X	ORIENTATION ANGLES (SEE FIGURES ABOVE FOR DETAILS): MAST ARM A ANGLE	PEDESTAL ANGLE	PEDESTRIAN SIGNAL	PEDESTRIAN PUSHBUTTON	POLE MOUNTED SIGN	POWER SERVICE	BRACKET ARM	HANDHOLE	CABLE ENTRANCE 12" FROM TOP
								FT	FT	FT	FT	FT	FT	FT	FT	FT	FT	FT	FT	FT	DEG	DEG	DEG	DEG	DEG	DEG	DEG	DEG	DEG
SP-2	503+35.15	57.03 LT	SIGNAL	825.36	825.03	TC-81.22	14	21.5	20	70	17	30	38	47	62	67	67	-	-	-	330	-	20 / 90	270	180	-	-	180	-
SP-4	504+18.65	64.88 LT	SIGNAL	825.11	825.23	TC-81.22	12	30	20	45	23	29	36	40	-	-	-	33	-	10	60	-	5 / 100	5	90	-	300	180	-
SP-6	504+71.43	47.56 RT	SIGNAL	825.26	824.57	TC-81.22	13	21.5	20	56	28	32	38	43	50	50	53	47	-	-	330	-	280	280	-	-	-	180	-
SP-7	503+93.81	43.14 RT	SIGNAL	825.38	825.32	TC-81.22	4	30	20	35	11	16	25	32	-	-	-	23	-	10	60	-	170 / 300	300	-	135	300	180	135
SP-1	503+32.74	47.32 LT	PEDESTAL	-	824.66	DOES NOT APPLY		5	DOES NOT APPLY TO PEDESTAL SUPPORTS													330	-	10	-	-	-	0	-
SP-3	504+03.40	75.23 LT	PEDESTAL	-	824.65			5														40	-	310	-	-	-	0	-
SP-5	504+77.95	41.07 RT	PEDESTAL	-	824.54			10														340	200	20	-	-	-	0	-
SP-8	503+79.58	34.38 RT	PEDESTAL	-	825.28			5														0	-	60	-	-	-	0	-

CALCULATED GSH
CHECKED KRM

TRAFFIC SIGNAL DETAILS
ELM STREET & MAIN STREET

MIA-41-09.49

L:\TroyOH\19060901-00_WestMainCorridorImprov\108662\Roadway\Sheets\08662CP202.dgn 1/26/2022 5:26:15 PM ghansel

WIRING DIAGRAM

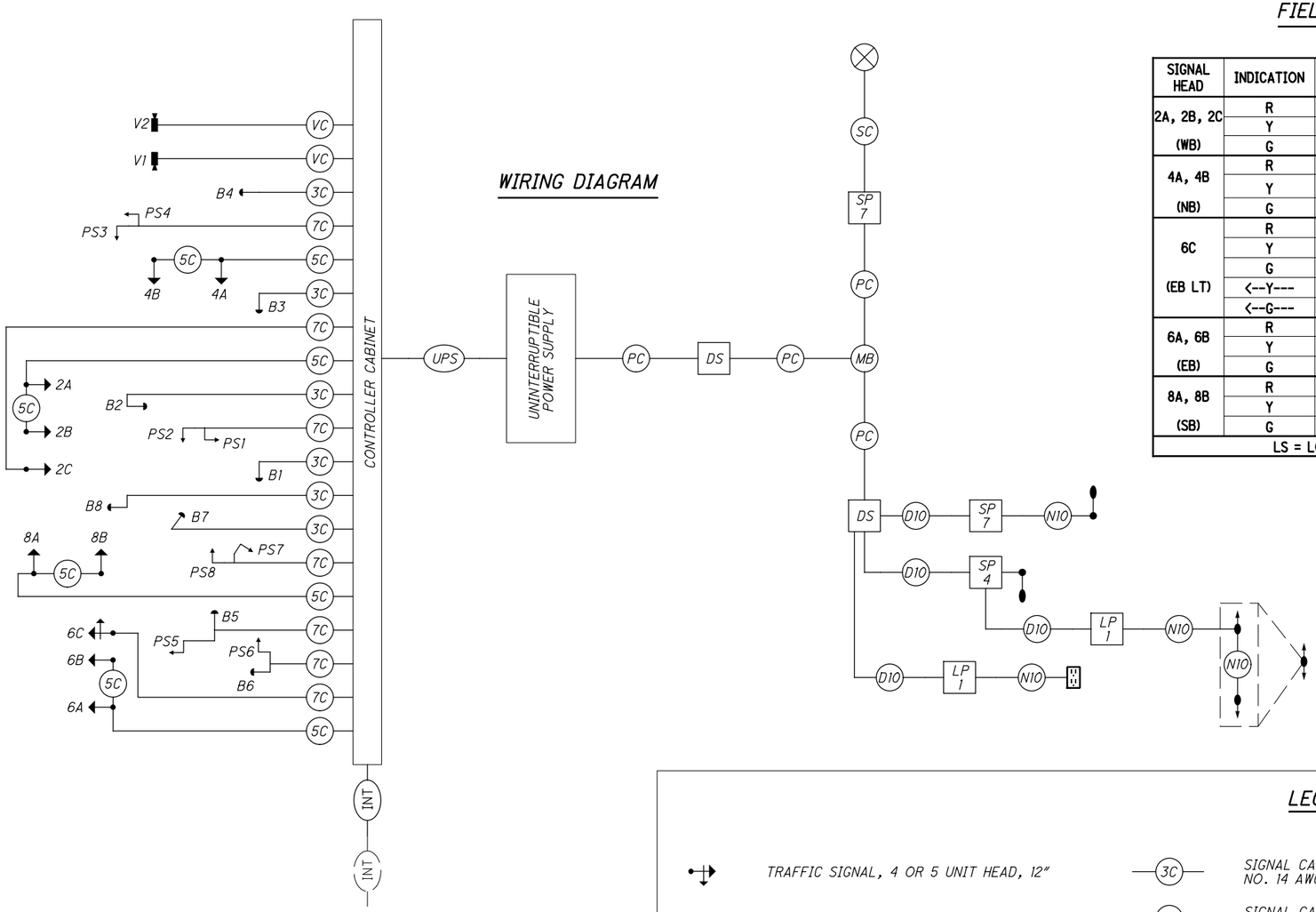

FIELD WIRING HOOK-UP CHART (TEM FORM 496-16)

SIGNAL HEAD	INDICATION	FIELD TERMINAL	FLASH
2A, 2B, 2C (WB)	R	ϕ2 R	R
	Y	ϕ2 Y	
	G	ϕ2 G	
4A, 4B (NB)	R	ϕ4 R	R
	Y	ϕ4 Y	
	G	ϕ4 G	
6C (EB LT)	R	ϕ6 R	R
	Y	ϕ6 Y	
	G	ϕ6 G	
	<--Y---	ϕ1 Y	
	<--G---	ϕ1 G	
6A, 6B (EB)	R	ϕ6 R	R
	Y	ϕ6 Y	
	G	ϕ6 G	
8A, 8B (SB)	R	ϕ8 R	R
	Y	ϕ8 Y	
	G	ϕ8 G	
LS = LOAD SWITCH			

SIGNAL HEAD	INDICATION	FIELD TERMINAL	FLASH
PEDESTRIAN MOVEMENTS			
PED 2P NORTH	W	ϕ2 PED / LS 10 G	OUT
	DW	ϕ2 PED / LS 10 R	
PED 4P EAST	W	ϕ4 PED / LS 11 G	OUT
	DW	ϕ4 PED / LS 11 R	
PED 6P SOUTH	W	ϕ6 PED / LS 12 G	OUT
	DW	ϕ6 PED / LS 12 R	
PED 8P WEST	W	ϕ8 PED / LS 13 G	OUT
	DW	ϕ8 PED / LS 13 R	
NO OVERLAPS			

NOTES:

- FOR LOCATIONS WITH LEFT TURN LANES RUN 7C FOR POTENTIAL PT/PM LT PHASE IF INITIAL DESIGN IS FOR PERMITTED ONLY.
- OVERLAPS SHALL BE WIRED TO THE APPROPRIATE LOAD SWITCHES AS PER THE FIELD HOOKUP CHART AND CONFIGURED IN THE CONTROLLER SOFTWARE PER THE SIGNAL TIMING CHART.
- FIBER OPTIC CONNECTIONS TO BE DONE BY OTHERS.

LEGEND

- TRAFFIC SIGNAL, 4 OR 5 UNIT HEAD, 12"
- TRAFFIC SIGNAL, 2 UNIT, 3 UNIT, OR PHB HEAD 12"
- TRAFFIC SIGNAL, 3 UNIT HEAD, 12" WITH ARROWS
- PEDESTRIAN SIGNAL
- PEDESTRIAN PUSH BUTTON
- DILEMMA ZONE RADAR DETECTION UNIT
- VIDEO DETECTION CAMERA
- LUMINAIRE
- TWIN LIGHT POLE
- 3C — SIGNAL CABLE, 3 CONDUCTOR, NO. 14 AWG
- 5C — SIGNAL CABLE, 5 CONDUCTOR, NO. 14 AWG
- 7C — SIGNAL CABLE, 7 CONDUCTOR, NO. 14 AWG
- RC — RADAR DETECTION CABLE
- VC — VIDEO DETECTION CAMERA CABLE
- INT — PROP. FIBER CONNECTION (BY OTHERS)
- INT — Ex. Fiber Connection
- POWER SOURCE
- DUPLEX GFCI RECEPTACLE WITH IN-USE COVER
- SC — SERVICE CABLE, 3 CONDUCTOR, NO. 8 AWG
- PC — POWER CABLE, 2 CONDUCTOR, NO. 6 AWG
- SP 1 — SIGNAL SUPPORT POLE NO. __
- MB — METER BASE
- D10 — THREE RUNS OF NO. 10 AWG 600 VOLT DISTRIBUTION CABLE
- N10 — THREE RUNS OF NO. 10 AWG POLE & BRACKET CABLE
- DS — DISCONNECT SWITCH
- UPS — UNINTERRUPTIBLE POWER SUPPLY CABLE

CALCULATED GSH
CHECKED KRM

TRAFFIC SIGNAL DETAILS
ELM STREET & MAIN STREET

MIA-41-09.49

L:\TroyOH\19060901-00_WestMainCorridorImprov\108662\Roadway\Sheets\08662CP203.dgn 1/26/2022 5:26:25 PM ghansel

SUBSUMMARY

ITEM	QUAN.	UNIT	DESCRIPTION
625	3	EACH	CONNECTION, FUSED PULL APART
625	3	EACH	CONNECTION, UNFUSED PULL APART
625	1	EACH	LIGHT POLE, CONVENTIONAL
625	1	EACH	LIGHT POLE FOUNDATION, 24" X 6' DEEP
625	4	EACH	BRACKET ARM, 10'
625	2600	FT	NO. 10 AWG 600 VOLT DISTRIBUTION CABLE
625	200	FT	NO. 10 AWG POLE AND BRACKET CABLE
625	193	FT	CONDUIT, 2", 725.05
625	66	FT	CONDUIT, 3", 725.05
625	103	FT	CONDUIT, JACKED OR DRILLED, 2", 725.04
625	279	FT	CONDUIT, JACKED OR DRILLED, 4", 725.04
625	4	EACH	LUMINAIRE, CONVENTIONAL, SOLID STATE (LED), 194W, TYPE III, 240V
625	245	FT	TRENCH
625	4	EACH	PULL BOX, 725.08, 18"
625	3	EACH	PULL BOX, 725.08, 24"
625	10	EACH	GROUND ROD
625	245	FT	UNDERGROUND WARNING/MARKING TAPE
625	1	EACH	LIGHTING, MISC.: DUPLEX 20A NEMA 5-20R WEATHER RESISTANT RECEPTACLE WITH IN-USE COVER
630	12	EACH	SIGN HANGER ASSEMBLY, MAST ARM, AS PER PLAN
630	53	SF	SIGN, FLAT SHEET
630	2	EACH	SIGN, DOUBLE FACED, STREET NAME, AS PER PLAN
630	4	EACH	SIGN, STREET NAME
632	9	EACH	VEHICULAR SIGNAL HEAD, (LED), 3-SECTION, 12" LENS, 1-WAY, POLYCARBONATE, AS PER PLAN, BLACK, WITH BACKPLATE
632	1	EACH	VEHICULAR SIGNAL HEAD, (LED), 5-SECTION, 12" LENS, 1-WAY, POLYCARBONATE, AS PER PLAN, BLACK, WITH BACKPLATE
632	8	EACH	PEDESTRIAN SIGNAL HEAD (LED), TYPE D2, COUNTDOWN, AS PER PLAN
632	10	EACH	COVERING OF VEHICULAR SIGNAL HEAD
632	8	EACH	COVERING OF PEDESTRIAN SIGNAL HEAD
632	8	EACH	PEDESTRIAN PUSHBUTTON
632	890	FT	SIGNAL CABLE, 3 CONDUCTOR, NO. 14 AWG
632	1020	FT	SIGNAL CABLE, 5 CONDUCTOR, NO. 14 AWG
632	1520	FT	SIGNAL CABLE, 7 CONDUCTOR, NO. 14 AWG
632	4	EACH	SIGNAL SUPPORT FOUNDATION
632	4	EACH	PEDESTAL FOUNDATION
632	50	FT	POWER CABLE, 3 CONDUCTOR, NO. 6 AWG
632	320	FT	SERVICE CABLE, 3 CONDUCTOR, NO. 8 AWG
632	1	EACH	POWER SERVICE, AS PER PLAN
632	1	EACH	SIGNAL SUPPORT, TYPE TC-81.22, DESIGN 13, AS PER PLAN
632	1	EACH	SIGNAL SUPPORT, TYPE TC-81.22, DESIGN 14, AS PER PLAN
632	1	EACH	COMBINATION SIGNAL SUPPORT, TYPE TC-81.22, DESIGN 4, AS PER PLAN
632	1	EACH	COMBINATION SIGNAL SUPPORT, TYPE TC-81.22, DESIGN 12, AS PER PLAN
632	9	EACH	PEDESTAL, 5', TRANSFORMER BASE, AS PER PLAN
632	1	EACH	PEDESTAL, 10', TRANSFORMER BASE, AS PER PLAN
632	1	EACH	REMOVAL OF TRAFFIC SIGNAL INSTALLATION
633	1	EACH	CABINET FOUNDATION
633	1	EACH	CONTROLLER WORK PAD
633	1	EACH	UNINTERRUPTIBLE POWER SUPPLY (UPS), 1000 WATT, AS PER PLAN
633	1	EACH	CONTROLLER ITEM, MISC.: CABINET, TYPE TS-1, AS PER PLAN
633	1	EACH	CONTROLLER ITEM, MISC.: 10/100/1000 ETHERNET SWITCH, AS PER PLAN
809	1	EACH	ATC V6.24 CONTROLLER, AS PER PLAN
			ALTERNATE BID ITEMS
816	1	EACH	VIDEO DETECTION SYSTEM, AS PER PLAN (ALTERNATE BID A)
816	1	EACH	VIDEO DETECTION SYSTEM, AS PER PLAN (ALTERNATE BID B)

CALCULATED GSH
CHECKED KRM

TRAFFIC SIGNAL DETAILS
ELM STREET & MAIN STREET

MIA-41-09.49

L:\TroyOH\19060901-00_WestMainCorridorImprov\108662\Roadway\Sheets\08662CP204.dgn 1/26/2022 5:26:32 PM ghansel

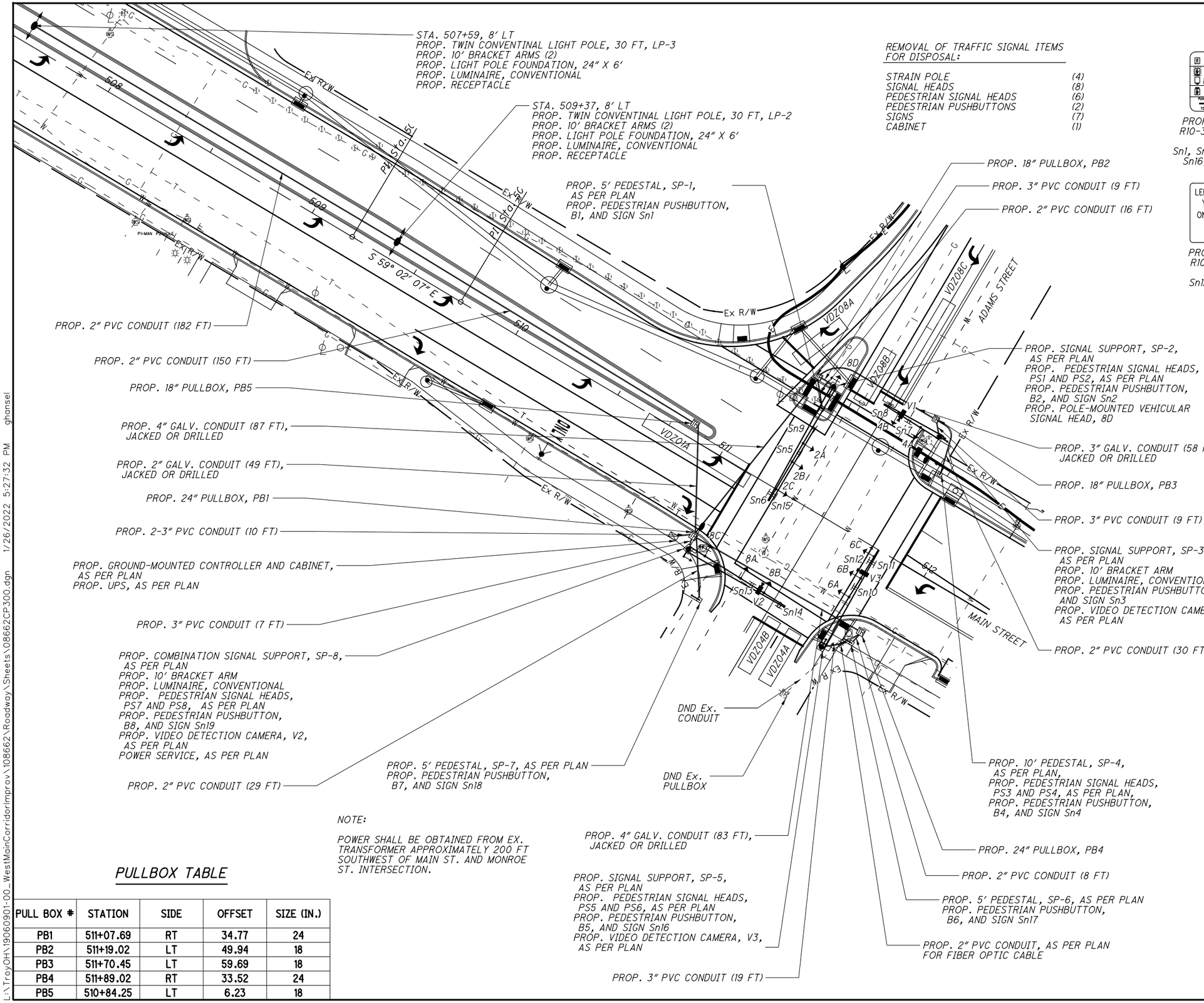

REMOVAL OF TRAFFIC SIGNAL ITEMS FOR DISPOSAL:

STRAIN POLE	(4)
SIGNAL HEADS	(8)
PEDESTRIAN SIGNAL HEADS	(6)
PEDESTRIAN PUSHBUTTONS	(2)
SIGNS	(7)
CABINET	(1)

SIGNS

PROPOSED R10-3E(R)-9 — Sn1, Sn2, Sn4, Sn16, Sn19

PROPOSED R10-3E(L)-9 — Sn3, Sn17, Sn18

PROPOSED R10-11B-36 — Sn9

PROPOSED R3-5L-30 — Sn14, Sn6, Sn8, Sn11

PROPOSED R10-12-24 — Sn12, Sn15

PROPOSED GREEN D3-1-60 — Sn5, Sn10

PROPOSED GREEN D3-1-60 — Sn7, Sn13

SIGNAL HEADS

PROPOSED SIGNAL HEAD — 2A, 2B, 2C, 4A, 4B, 6A, 6B, 8A, 8B

PROPOSED SIGNAL HEAD — 8C, 8D

PROPOSED SIGNAL HEAD — 6C

PROPOSED PEDESTRIAN SIGNAL HEAD — PS1. PS2, PS3, PS4, PS5, PS6, PS7, PS8

LEGEND

	PROP	EXIST
TRAFFIC SIGNAL, 3 UNIT HEAD, 12"		
SIGNAL SUPPORT POLE		
PEDESTRIAN SIGNAL		
PEDESTRIAN PUSH BUTTON		
PEDESTAL SUPPORT		
LUMINAIRE		
TWIN LIGHT POLE		
CONTROLLER CABINET AND WORK PAD (TS-1)		
TRAFFIC PULL BOX		
VIDEO DETECTION CAMERA		
DETECTOR ZONE		

NOTE:

POWER SHALL BE OBTAINED FROM EX. TRANSFORMER APPROXIMATELY 200 FT SOUTHWEST OF MAIN ST. AND MONROE ST. INTERSECTION.

PULLBOX TABLE

PULL BOX #	STATION	SIDE	OFFSET	SIZE (IN.)
PB1	511+07.69	RT	34.77	24
PB2	511+19.02	LT	49.94	18
PB3	511+70.45	LT	59.69	18
PB4	511+89.02	RT	33.52	24
PB5	510+84.25	LT	6.23	18

HORIZONTAL SCALE IN FEET 0 10 20 40

CALCULATED GSH CHECKED KRM

TRAFFIC SIGNAL PLAN
ADAMS STREET & MAIN STREET

MIA-41-09.49

L:\TroyOH\19060901-00_WestMainCorridorImprov\108662\Roadway\Sheets\08662CP300.dgn 1/26/2022 5:27:32 PM ghansel

SIGNAL TIMING CHART (TEM FORM 496-3)

INTERSECTION: ADAMS STREET & MAIN STREET
MAINTAINING AGENCY: CITY OF TROY

START UP								
START IN: ALL-RED FLASH	DUAL ENTRY: YES			PHASES:			2&6, 4&8	
TIME FOR: FLASH , ALL RED (SEC.): 9, 6	REST IN RED:			RING 1	-		RING 2	-
FIRST PHASE(S): 2, 6	OVERLAP				A	B	C	D
COLOR DISPLAYED: YELLOW	PHASES				1, 8	-	-	-
INTERVAL OR FEATURE	CONTROLLER MOVEMENT NO.							
INTERSECTION MOVEMENT (PHASE)	1	2	3	4	5	6	7	8
DIRECTION	EB-LT	WB	-	NB	-	EB	-	SB
MINIMUM GREEN (INITIAL) (SEC.)	7	20	-	10	-	20	-	10
ADDED INITIAL *(SEC./ACTUATION)	-	-	-	-	-	-	-	-
MAXIMUM INITIAL (SEC.)	-	-	-	-	-	-	-	-
PASSAGE TIME (PRESET GAP) (SEC.)	1	-	-	3	-	-	-	3
TIME BEFORE REDUCTION *(SEC.)	-	-	-	-	-	-	-	-
MINIMUM GAP *(SEC.)	-	-	-	-	-	-	-	-
TIME TO REDUCE *(SEC.)	-	-	-	-	-	-	-	-
MAXIMUM GREEN I (SEC.)	20	45	-	30	-	45	-	30
MAXIMUM GREEN II (SEC.)	20	45	-	30	-	45	-	30
YELLOW CHANGE (SEC.)	3.0	4.1	-	3.4	-	4.1	-	3.4
ALL RED CLEARANCE (SEC.)	1.6	1.0	-	1.2	-	1.0	-	1.2
DELAYED GREEN (LPI) ** (SEC.)	-	-	-	-	-	-	-	-
FLASHING YELLOW ARROW DELAY * (SEC.)	-	-	-	-	-	-	-	-
WALK (SEC.)	-	9	-	10	-	9	-	10
PEDESTRIAN CLEARANCE (SEC.)	-	12	-	19	-	12	-	19
RECALL MAXIMUM (ON/OFF)	OFF	OFF	-	OFF	-	OFF	-	OFF
RECALL MINIMUM (ON/OFF)	OFF	ON	-	ON	-	ON	-	ON
RECALL PEDESTRIAN (ON/OFF)	OFF	OFF	-	OFF	-	OFF	-	OFF
MEMORY (ON/OFF)	-	-	-	-	-	-	-	-

*VOLUME DENSITY CONTROLS

*FOR CROSSING WITH PEDESTRIAN PUSHBUTTONS, LPI'S (LEADING PEDESTRIAN INTERVALS) MAY BE IMPLEMENTED (3-6 SEC.) IN ACCORDANCE WITH LPI DURATION TIME PER THE ODOT SIGNAL CALCULATIONS - CLEARANCE INTERVALS SPREADSHEET.

PHASING DIAGRAM

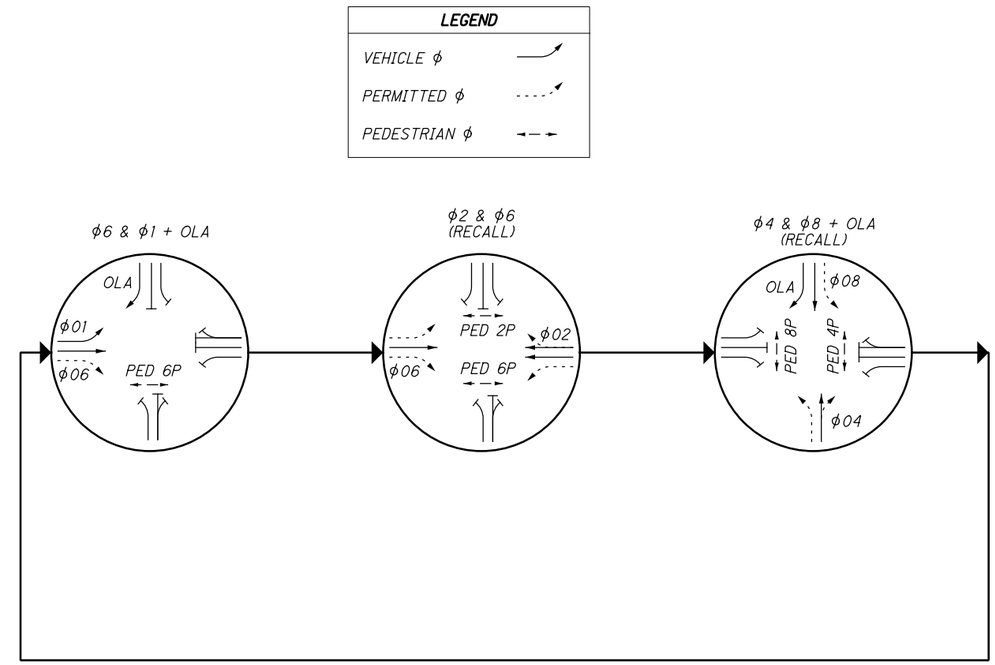

NOTES:

- ϕ1 SHALL BE ACTUATED. THE PRIMARY THRU AND SIDE STREET MOVEMENTS SHOULD HAVE MIN RECALL ACTIVE TO AVOID YELLOW BALL TRAP.
- FOR PROTECTED/PERMISSIVE PHASES, IMPLEMENT CALL OMITS TO AVOID YELLOW BALL TRAP.
- ENABLE ϕ1 DETECTOR SWITCHING TO ALLOW ϕ1 TO EXTEND ϕ6 WHEN ALLOCATED GREEN TIME FOR LEFT TURN PHASES ARE EXHAUSTED.
- COUNTDOWN PEDESTRIAN SIGNALS SHALL GO TO ZERO ON YELLOW PER OMUTCD FIGURE 4E-2.
- ALL DETECTOR DELAYS SHALL BE PLACED IN THE CONTROLLER.

VIDEO DETECTION CHART (TEM FORM 496-4)

DETECTION ZONE	MOVEMENT	PULSE OR PRESENCE	ASSOCIATED PHASE	DELAY PROGRAMMED IN CONTROLLER (SEC.)	EXTENSION PROGRAMMED IN CONTROLLER (SEC.)	DETECTOR NO.	PURPOSE	DETECTION ZONE LENGTH (FT)
VDZ01A	EB-LT	PRESENCE	1	2	-	V3	SL	50
VDZ04A	NB	PRESENCE	4	-	-	V1	SL	25
VDZ04B	NB-LT	PRESENCE	4	2	-	V1	SL	25
VDZ08A	SB-RT	PRESENCE	1	5	-	V2	SL	25
VDZ08B	SB	PRESENCE	8	-	-	V2	SL	25
VDZ08C	SB-LT	PRESENCE	8	2	-	V2	SL	50

PURPOSE: STOP-LINE OR ADVANCED DETECTION

CALCULATED GSH
CHECKED KRM

TRAFFIC SIGNAL DETAILS
ADAMS STREET & MAIN STREET

MIA-41-09.49

L:\TroyOH\19060901-00_WestMainCorridorImprov\108662\Roadway\Sheets\08662CP301.dgn 1/26/2022 5:27:43 PM ghansel

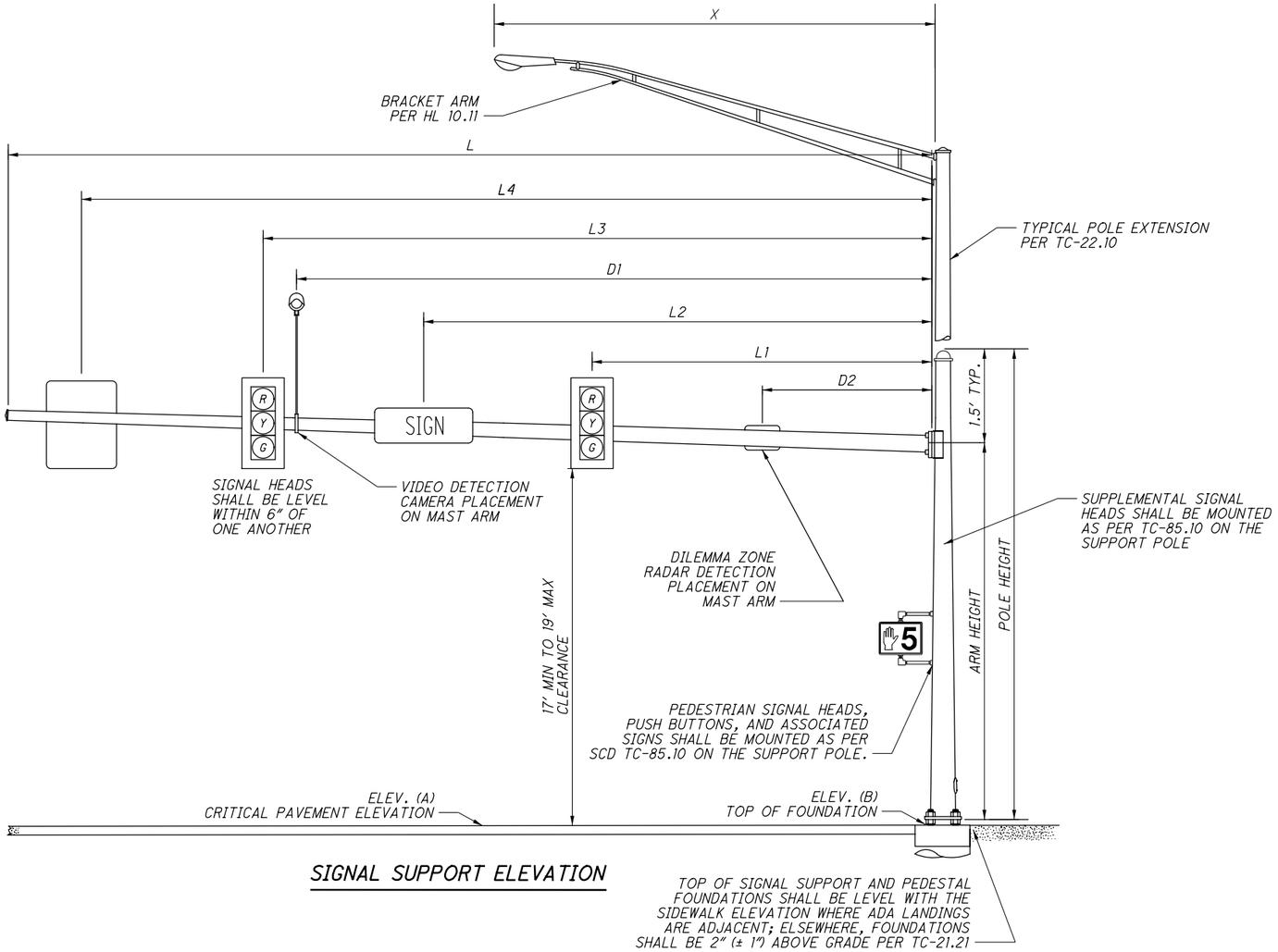

SIGNAL SUPPORT ELEVATION

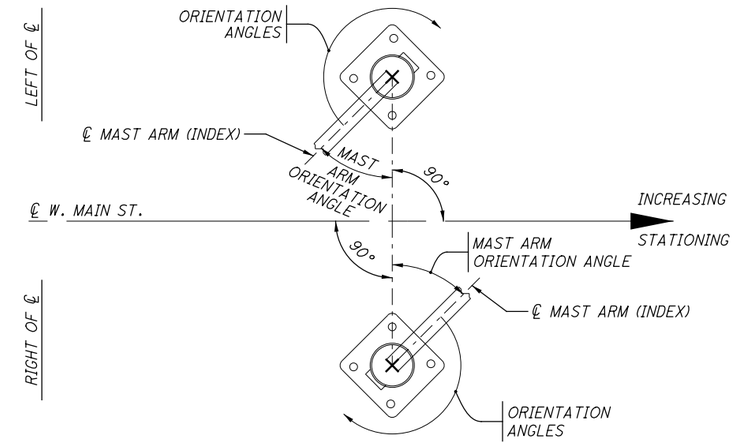

SIGNAL POLE ORIENTATION

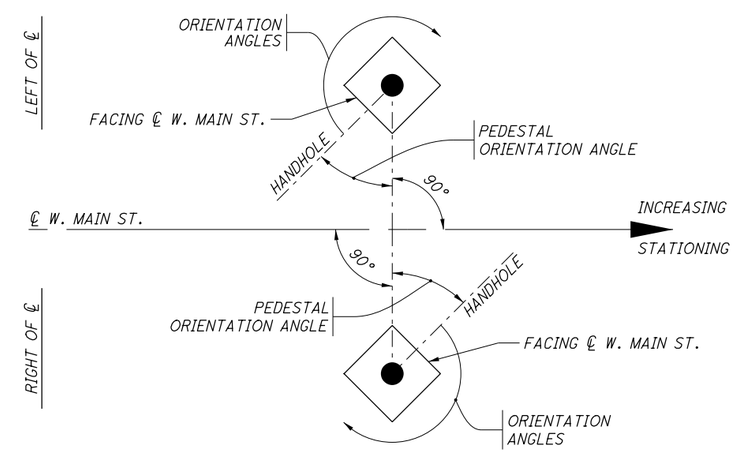

PEDESTAL ORIENTATION

MAST ARM TABLE (TEM FIGURE 498-37 & 38)

SUPPORT NO.	STATION	OFFSET	TYPE	ELEVATION A (Pavt. Elev.)	ELEVATION B (Top of Found.)	SUPPORT DETAILS: DESIGN TYPE	DESIGN NO.	POLE HEIGHT	ARM HEIGHT	L	L1	L2	L3	L4	L5	L6	L7	D1	D2	X	ORIENTATION ANGLES (SEE FIGURES ABOVE FOR DETAILS): MAST ARM A ANGLE	PEDESTAL ANGLE	PEDESTRIAN SIGNAL	PEDESTRIAN PUSHBUTTON	POLE MOUNTED SIGNAL	POWER SERVICE	BRACKET ARM	HANDHOLE	CABLE ENTRANCE 12" FROM TOP
								FT	FT	FT	FT	FT	FT	FT	FT	FT	FT	FT	FT	FT	DEG	DEG	DEG	DEG	DEG	DEG	DEG	DEG	DEG
SP-2	511+26.43	49.50 LT	SIGNAL	831.65	831.79	TC-81.22	13	21.5	20	54	18	26	35	37	48	52	52	-	-	-	0	-	0 / 90	0	180	-	-	180	-
SP-3	511+75.63	54.08 LT	SIGNAL	830.76	831.65	TC-81.22	2	30	20	26	8	13	19	24	-	-	-	17	-	10	90	-	-	180	-	-	270	180	-
SP-5	511+77.94	47.45 RT	SIGNAL	831.96	830.65	TC-81.22	12	21.5	20	46	23	27	32	40	40	43	-	35	-	-	0	-	0 / 90	0	-	-	-	180	-
SP-8	511+08.70	40.63 RT	SIGNAL	830.94	830.88	TC-81.22	12	30	20	46	6	24	29	36	44	-	-	33	-	10	90	-	0 / 90	90	-	135	270	180	135
SP-1	511+28.48	39.10 LT	PEDESTAL	-	831.00	DOES NOT APPLY		5	DOES NOT APPLY TO PEDESTAL SUPPORTS													0	-	90	-	-	-	0	-
SP-4	511+83.75	40.52 LT	PEDESTAL	-	831.44			10														0	90 / 180	180	-	-	-	0	-
SP-6	511+88.04	39.60 RT	PEDESTAL	-	830.87			5														0	-	270	-	-	-	0	-
SP-7	511+23.62	56.68 RT	PEDESTAL	-	830.90			5														0	-	270	-	-	-	0	-

CALCULATED GSH
CHECKED KRM

TRAFFIC SIGNAL DETAILS
ADAMS STREET & MAIN STREET

MIA-41-09.49

L:\Troy OH\19060901-00_WestMainCorridorImprov\108662\Roadway\Sheets\08662CP302.dgn 1/26/2022 5:27:52 PM ghansel

WIRING DIAGRAM

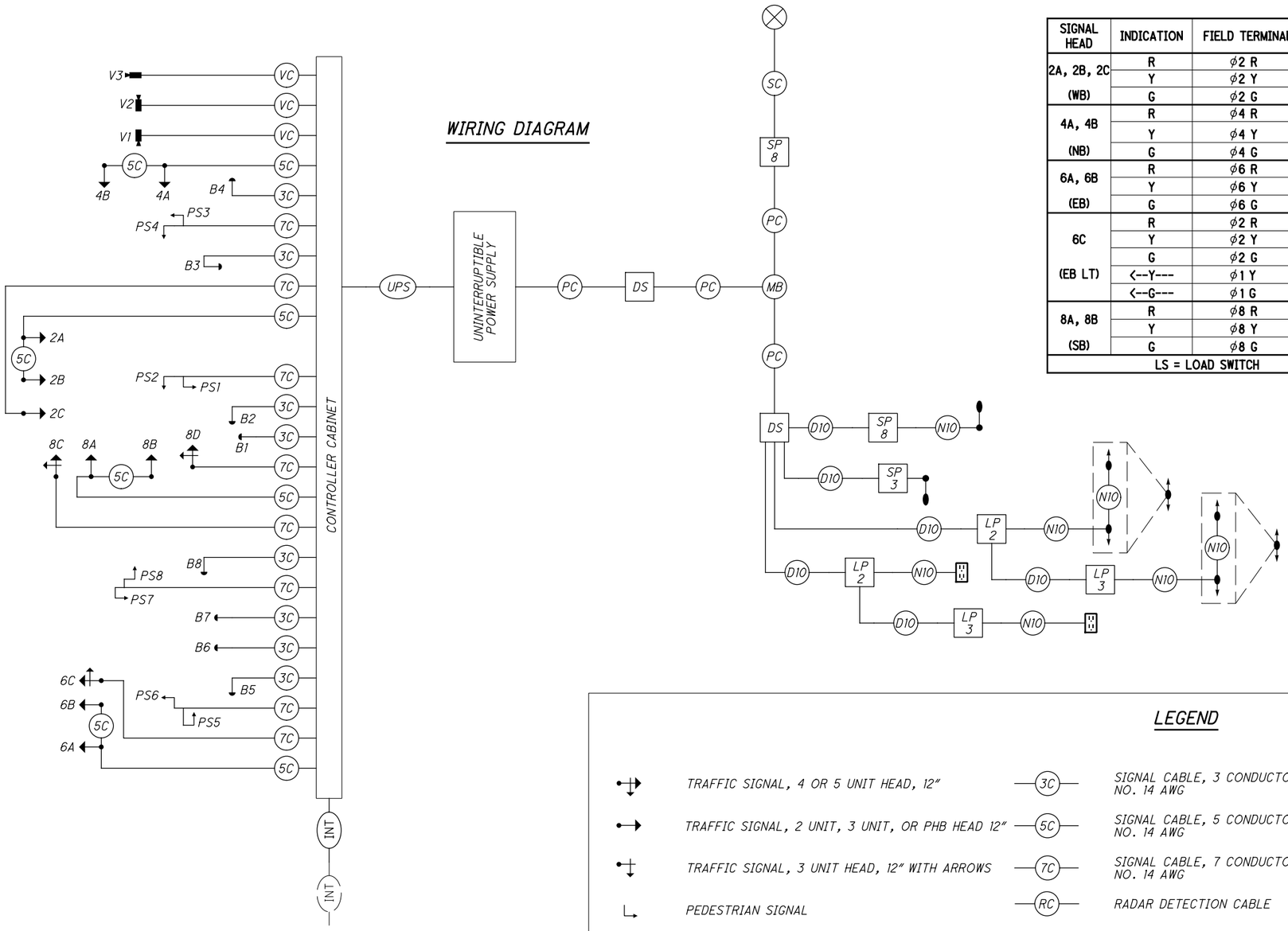

FIELD WIRING HOOK-UP CHART (TEM FORM 496-16)

SIGNAL HEAD	INDICATION	FIELD TERMINAL	FLASH
2A, 2B, 2C (WB)	R	ϕ2 R	R
	Y	ϕ2 Y	
	G	ϕ2 G	
4A, 4B (NB)	R	ϕ4 R	R
	Y	ϕ4 Y	
	G	ϕ4 G	
6A, 6B (EB)	R	ϕ6 R	R
	Y	ϕ6 Y	
	G	ϕ6 G	
6C (EB LT)	R	ϕ2 R	R
	Y	ϕ2 Y	
	G	ϕ2 G	
	<--Y---	ϕ1 Y	
	<--G---	ϕ1 G	
8A, 8B (SB)	R	ϕ8 R	R
	Y	ϕ8 Y	
	G	ϕ8 G	
LS = LOAD SWITCH			

SIGNAL HEAD	INDICATION	FIELD TERMINAL	FLASH
8C, 8D (SB RT)	R	ϕ2 R	R
	Y	ϕ2 Y	
	G	ϕ2 G	
	---Y-->	ϕ1 Y / LS 14 Y	
	---G-->	ϕ1 G / LS 14 G	
PEDESTRIAN MOVEMENTS			
PED 2P NORTH	W	ϕ2 PED / LS 10 G	OUT
	DW	ϕ2 PED / LS 10 R	
PED 4P EAST	W	ϕ4 PED / LS 11 G	OUT
	DW	ϕ4 PED / LS 11 R	
PED 6P SOUTH	W	ϕ6 PED / LS 12 G	OUT
	DW	ϕ6 PED / LS 12 R	
PED 8P WEST	W	ϕ8 PED / LS 13 G	OUT
	DW	ϕ8 PED / LS 13 R	
OVERLAPS			
OLA	---Y-->	ϕ1 Y / LS 14 Y	OUT
	---G-->	ϕ1 G / LS 14 G	

LEGEND

- TRAFFIC SIGNAL, 4 OR 5 UNIT HEAD, 12"
- TRAFFIC SIGNAL, 2 UNIT, 3 UNIT, OR PHB HEAD 12"
- TRAFFIC SIGNAL, 3 UNIT HEAD, 12" WITH ARROWS
- PEDESTRIAN SIGNAL
- PEDESTRIAN PUSH BUTTON
- DILEMMA ZONE RADAR DETECTION UNIT
- VIDEO DETECTION CAMERA
- LUMINAIRE
- TWIN LIGHT POLE
- 3C — SIGNAL CABLE, 3 CONDUCTOR, NO. 14 AWG
- 5C — SIGNAL CABLE, 5 CONDUCTOR, NO. 14 AWG
- 7C — SIGNAL CABLE, 7 CONDUCTOR, NO. 14 AWG
- RC — RADAR DETECTION CABLE
- VC — VIDEO DETECTION CAMERA CABLE
- INT — PROP. FIBER CONNECTION (BY OTHERS)
- INT — Ex. Fiber Connection
- POWER SOURCE
- DUPLEX GFCI RECEPTACLE WITH IN-USE COVER
- SC — SERVICE CABLE, 3 CONDUCTOR, NO. 8 AWG
- PC — POWER CABLE, 2 CONDUCTOR, NO. 6 AWG
- SP 1 — SIGNAL SUPPORT POLE NO. __
- MB — METER BASE
- D10 — THREE RUNS OF NO. 10 AWG 600 VOLT DISTRIBUTION CABLE
- N10 — THREE RUNS NO. 10 AWG POLE & BRACKET CABLE
- DS — DISCONNECT SWITCH
- UPS — UNINTERRUPTIBLE POWER SUPPLY CABLE

NOTES:

- FOR LOCATIONS WITH LEFT TURN LANES RUN 7C FOR POTENTIAL PT/PM LT PHASE IF INITIAL DESIGN IS FOR PERMITTED ONLY.
- OVERLAPS SHALL BE WIRED TO THE APPROPRIATE LOAD SWITCHES AS PER THE FIELD HOOKUP CHART AND CONFIGURED IN THE CONTROLLER SOFTWARE PER THE SIGNAL TIMING CHART.
- FIBER OPTIC CONNECTIONS TO BE DONE BY OTHERS.

CALCULATED GSH
CHECKED KRM

TRAFFIC SIGNAL DETAILS
ADAMS STREET & MAIN STREET

MIA-41-09.49

L:\TroyOH\19060901-00_WestMainCorridorImprov\108662\Roadway\Sheets\08662CP303.dgn 1/26/2022 5:27:59 PM ghansel

SUBSUMMARY

ITEM	QUAN.	UNIT	DESCRIPTION
625	4	EACH	CONNECTION, FUSED PULL APART
625	4	EACH	CONNECTION, UNFUSED PULL APART
625	2	EACH	LIGHT POLE, CONVENTIONAL
625	2	EACH	LIGHT POLE FOUNDATION, 24" X 6' DEEP
625	6	EACH	BRACKET ARM, 10'
625	3210	FT	NO. 10 AWG 600 VOLT DISTRIBUTION CABLE
625	650	FT	NO. 10 AWG POLE AND BRACKET CABLE
625	415	FT	CONDUIT, 2", 725.05
625	15	FT	CONDUIT, 2", 725.05, AS PER PLAN
625	64	FT	CONDUIT, 3", 725.05
625	49	FT	CONDUIT, JACKED OR DRILLED, 2", 725.04
625	58	FT	CONDUIT, JACKED OR DRILLED, 3", 725.04
625	170	FT	CONDUIT, JACKED OR DRILLED, 4", 725.04
625	6	EACH	LUMINAIRE, CONVENTIONAL, SOLID STATE (LED), 194W, TYPE III, 240V
625	474	FT	TRENCH
625	3	EACH	PULL BOX, 725.08, 18"
625	2	EACH	PULL BOX, 725.08, 24"
625	1	EACH	PULL BOX REMOVED
625	11	EACH	GROUND ROD
625	474	FT	UNDERGROUND WARNING/MARKING TAPE
625	2	EACH	LIGHTING, MISC.: DUPLEX 20A NEMA 5-20R WEATHER RESISTANT RECEPTACLE WITH IN-USE COVER
630	11	EACH	SIGN HANGER ASSEMBLY, MAST ARM, AS PER PLAN
630	49	SF	SIGN, FLAT SHEET
630	4	EACH	SIGN, STREET NAME
632	9	EACH	VEHICULAR SIGNAL HEAD, (LED), 3-SECTION, 12" LENS, 1-WAY, POLYCARBONATE, AS PER PLAN, BLACK, WITH BACKPLATE
632	3	EACH	VEHICULAR SIGNAL HEAD, (LED), 5-SECTION, 12" LENS, 1-WAY, POLYCARBONATE, AS PER PLAN, BLACK, WITH BACKPLATE
632	8	EACH	PEDESTRIAN SIGNAL HEAD (LED), TYPE D2, COUNTDOWN, AS PER PLAN
632	12	EACH	COVERING OF VEHICULAR SIGNAL HEAD
632	8	EACH	COVERING OF PEDESTRIAN SIGNAL HEAD
632	8	EACH	PEDESTRIAN PUSHBUTTON
632	1080	FT	SIGNAL CABLE, 3 CONDUCTOR, NO. 14 AWG
632	800	FT	SIGNAL CABLE, 5 CONDUCTOR, NO. 14 AWG
632	1180	FT	SIGNAL CABLE, 7 CONDUCTOR, NO. 14 AWG
632	4	EACH	SIGNAL SUPPORT FOUNDATION
632	4	EACH	PEDESTAL FOUNDATION
632	60	FT	POWER CABLE, 3 CONDUCTOR, NO. 6 AWG
632	520	FT	SERVICE CABLE, 3 CONDUCTOR, NO. 8 AWG
632	1	EACH	POWER SERVICE, AS PER PLAN
632	1	EACH	SIGNAL SUPPORT, TYPE TC-81.22, DESIGN 12, AS PER PLAN
632	1	EACH	SIGNAL SUPPORT, TYPE TC-81.22, DESIGN 13, AS PER PLAN
632	1	EACH	COMBINATION SIGNAL SUPPORT, TYPE TC-81.22, DESIGN 2, AS PER PLAN
632	1	EACH	COMBINATION SIGNAL SUPPORT, TYPE TC-81.22, DESIGN 12, AS PER PLAN
632	3	EACH	PEDESTAL, 5', TRANSFORMER BASE, AS PER PLAN
632	1	EACH	PEDESTAL, 10', TRANSFORMER BASE, AS PER PLAN
632	1	EACH	REMOVAL OF TRAFFIC SIGNAL INSTALLATION
633	1	EACH	CABINET FOUNDATION
633	1	EACH	UNINTERRUPTIBLE POWER SUPPLY (UPS), 1000 WATT, AS PER PLAN
633	1	EACH	CONTROLLER ITEM, MISC.: CABINET, TYPE TS-1, AS PER PLAN
633	1	EACH	CONTROLLER ITEM, MISC.: 10/100/1000 ETHERNET SWITCH, AS PER PLAN
809	1	EACH	ATC V6.24 CONTROLLER, AS PER PLAN
			ALTERNATE BID ITEMS
816	1	EACH	VIDEO DETECTION SYSTEM, AS PER PLAN (ALTERNATE A)
816	1	EACH	VIDEO DETECTION SYSTEM, AS PER PLAN (ALTERNATE B)

CALCULATED GSH
CHECKED KRM

TRAFFIC SIGNAL DETAILS
ADAMS STREET & MAIN STREET

MIA-41-09.49

L:\TroyOH\19060901-00_WestMainCorridorImprov\108662\Roadway\Sheets\08662CP304.dgn 1/26/2022 5:28:06 PM ghansel

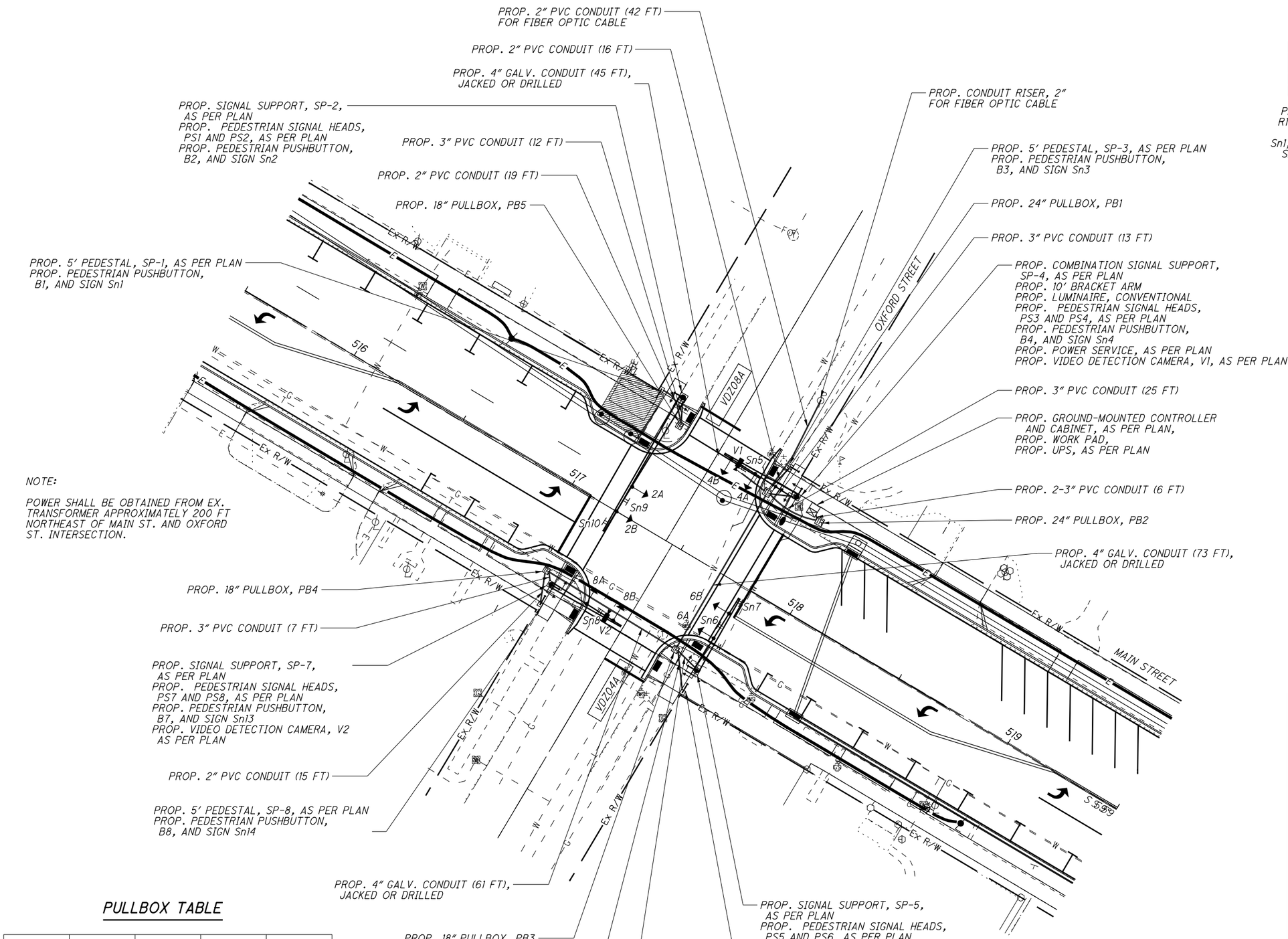

NOTE:

POWER SHALL BE OBTAINED FROM EX. TRANSFORMER APPROXIMATELY 200 FT NORTHEAST OF MAIN ST. AND OXFORD ST. INTERSECTION.

PULLBOX TABLE

PULL BOX #	STATION	SIDE	OFFSET	SIZE (IN.)
PB1	517+67.73	LT	36.77	24
PB2	517+91.39	LT	37.4	24
PB3	517+68.19	RT	34.94	18
PB4	517+08.54	RT	34.14	18
PB5	517+24.52	LT	41.75	18

SIGNS

PROPOSED R10-3E(R)-9

Sn1, Sn2, Sn4, Sn12, Sn13

PROPOSED R10-3E(L)-9

Sn3, Sn11, Sn14

PROPOSED GREEN D3-1-60

Sn5, Sn8

PROPOSED R3-5L-30

Sn7, Sn10

PROPOSED GREEN D3-1-60

Sn6, Sn9

SIGNAL HEADS

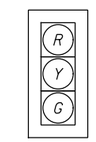

PROPOSED SIGNAL HEAD

2A, 2B, 4A, 4B, 6A, 6B, 8A, 8B

PROPOSED PEDESTRIAN SIGNAL HEAD

PS1. PS2, PS3, PS4, PS5, PS6, PS7, PS8

LEGEND

	PROP	EXIST
TRAFFIC SIGNAL, 3 UNIT HEAD, 12"		
TRAFFIC SIGNAL, 4 OR 5 UNIT HEAD, 12"		
SIGNAL SUPPORT POLE		
PEDESTRIAN SIGNAL		
PEDESTRIAN PUSH BUTTON		
PEDESTAL SUPPORT		
LUMINAIRE		
CONTROLLER CABINET AND WORK PAD (TS-1)		
TRAFFIC PULL BOX	TR	TR
VIDEO DETECTION CAMERA		
DETECTOR ZONE		

HORIZONTAL SCALE IN FEET 0 10 20 40

CALCULATED GSH
CHECKED KRM

TRAFFIC SIGNAL PLAN
OXFORD STREET & MAIN STREET

MIA-41-09.49

L:\TroyOH\19060901-00_WestMainCorridorImprov\108662\Roadway\Sheets\08662CP400.dgn 1/26/2022 5:28:59 PM ghansel

SIGNAL TIMING CHART (TEM FORM 496-3)

INTERSECTION: OXFORD STREET & MAIN STREET
MAINTAINING AGENCY: CITY OF TROY

START UP

START IN: ALL-RED FLASH
TIME FOR: FLASH , ALL RED (SEC.): 9, 6
FIRST PHASE(S): 2, 6
COLOR DISPLAYED: YELLOW

DUAL ENTRY: YES	PHASES:			2&6, 4&8		
REST IN RED:	RING 1	-		RING 2	-	
OVERLAP		A	B	C	D	
PHASES		-	-	-	-	

INTERVAL OR FEATURE	CONTROLLER MOVEMENT NO.							
INTERSECTION MOVEMENT (PHASE)	1	2	3	4	5	6	7	8
DIRECTION	-	WB	-	NB	-	EB	-	SB
MINIMUM GREEN (INITIAL) (SEC.)	-	20	-	10	-	20	-	10
ADDED INITIAL *(SEC./ACTUATION)	-	-	-	-	-	-	-	-
MAXIMUM INITIAL (SEC.)	-	-	-	-	-	-	-	-
PASSAGE TIME (PRESET GAP) (SEC.)	-	-	-	3	-	-	-	3
TIME BEFORE REDUCTION *(SEC.)	-	-	-	-	-	-	-	-
MINIMUM GAP *(SEC.)	-	-	-	-	-	-	-	-
TIME TO REDUCE *(SEC.)	-	-	-	-	-	-	-	-
MAXIMUM GREEN I (SEC.)	-	45	-	30	-	45	-	30
MAXIMUM GREEN II (SEC.)	-	45	-	30	-	45	-	30
YELLOW CHANGE (SEC.)	-	4.1	-	3.4	-	4.1	-	3.4
ALL RED CLEARANCE (SEC.)	-	1.0	-	1.1	-	1.0	-	1.1
DELAYED GREEN (LPI) ** (SEC.)	-	-	-	-	-	-	-	-
FLASHING YELLOW ARROW DELAY * (SEC.)	-	-	-	-	-	-	-	-
WALK (SEC.)	-	9	-	9	-	9	-	9
PEDESTRIAN CLEARANCE (SEC.)	-	8	-	13	-	8	-	13
RECALL MAXIMUM (ON/OFF)	-	OFF	-	OFF	-	OFF	-	OFF
RECALL MINIMUM (ON/OFF)	-	ON	-	OFF	-	ON	-	OFF
RECALL PEDESTRIAN (ON/OFF)	-	OFF	-	OFF	-	OFF	-	OFF
MEMORY (ON/OFF)	-	-	-	-	-	-	-	-

*VOLUME DENSITY CONTROLS

*FOR CROSSING WITH PEDESTRIAN PUSHBUTTONS, LPI'S (LEADING PEDESTRIAN INTERVALS) MAY BE IMPLEMENTED (3-6 SEC.) IN ACCORDANCE WITH LPI DURATION TIME PER THE ODOT SIGNAL CALCULATIONS - CLEARANCE INTERVALS SPREADSHEET.

NOTES:

- ϕ4, AND ϕ8 SHALL BE ACTUATED. THE PRIMARY THRU MOVEMENT SHOULD HAVE MIN RECALL ACTIVE TO REST IN GREEN.
- COUNTDOWN PEDESTRIAN SIGNALS SHALL GO TO ZERO ON YELLOW PER OMUTCD FIGURE 4E-2.
- ALL DETECTOR DELAYS SHALL BE PLACED IN THE CONTROLLER.

PHASING DIAGRAM

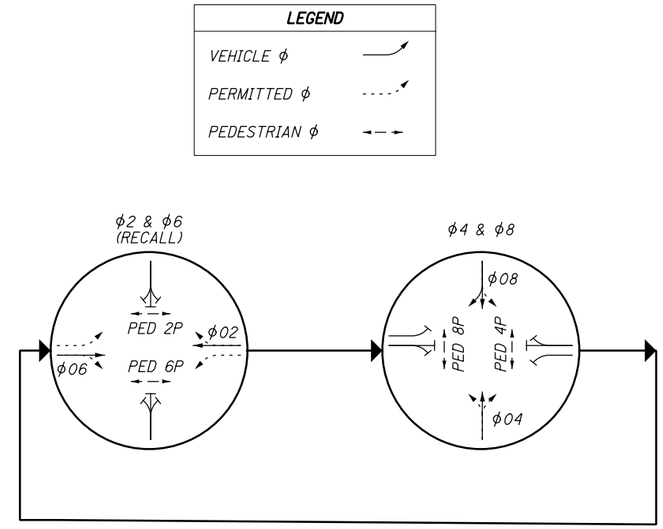

VIDEO DETECTION CHART (TEM FORM 496-4)

DETECTION ZONE	MOVEMENT	PULSE OR PRESENCE	ASSOCIATED PHASE	DELAY PROGRAMMED IN CONTROLLER (SEC.)	EXTENSION PROGRAMMED IN CONTROLLER (SEC.)	DETECTOR NO.	PURPOSE	DETECTION ZONE LENGTH (FT)
VDZ04A	NB	PRESENCE	4	-	-	V1	SL	25
VDZ08A	SB	PRESENCE	8	-	-	V2	SL	25

PURPOSE: STOP-LINE OR ADVANCED DETECTION

CALCULATED GSH
CHECKED KRM

TRAFFIC SIGNAL DETAILS
OXFORD STREET & MAIN STREET

MIA-41-09.49

L:\TroyOH\19060901-00_WestMainCorridorImprov\108662\Roadway\Sheets\08662CP401.dgn 1/26/2022 5:29:09 PM ghansel

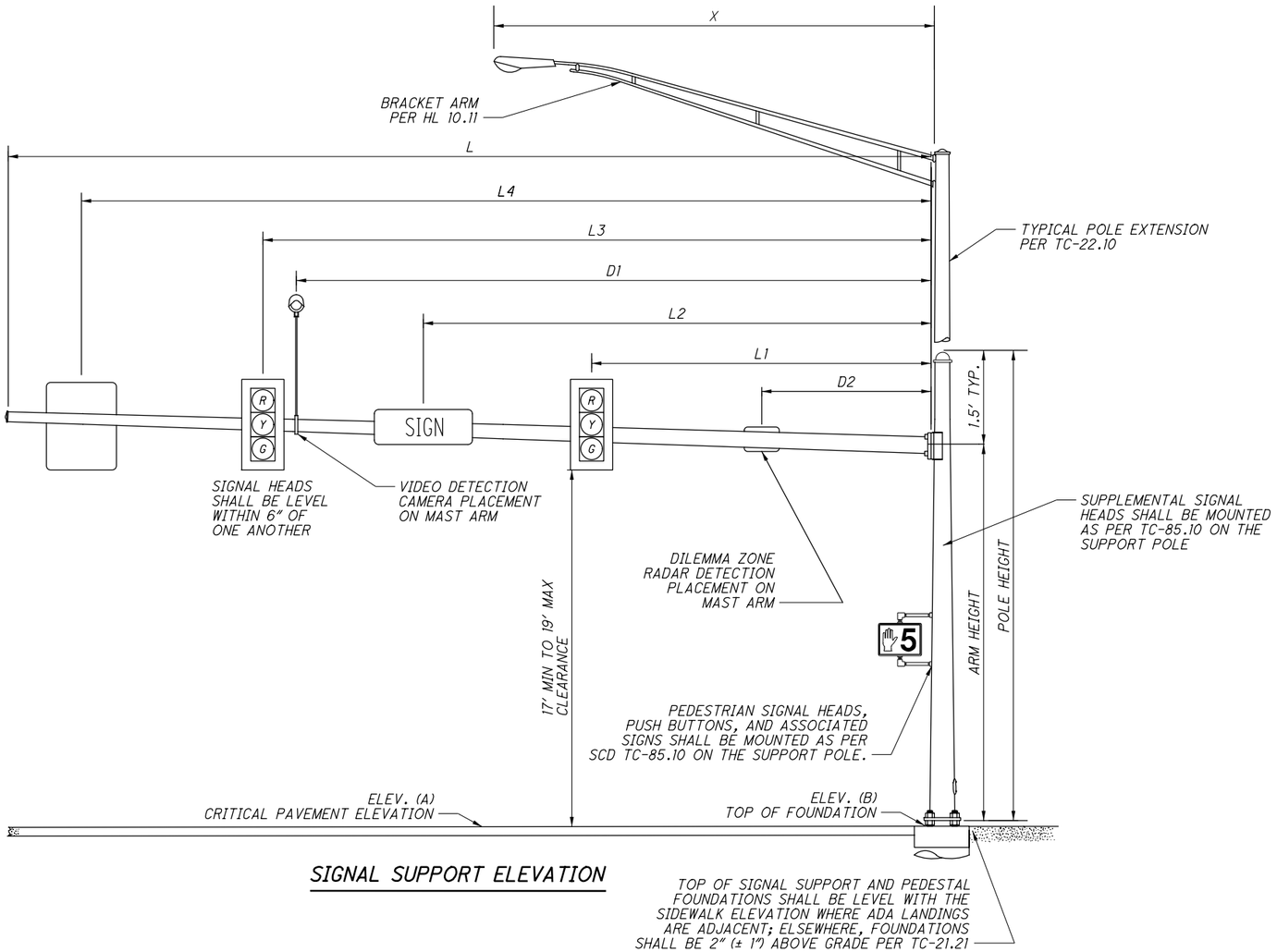

SIGNAL SUPPORT ELEVATION

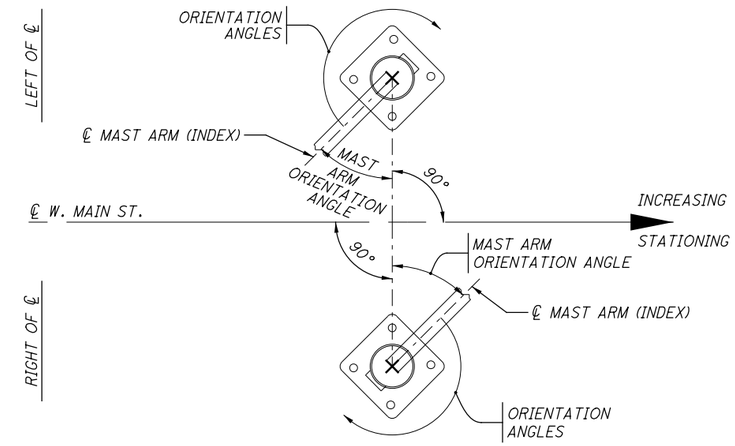

SIGNAL POLE ORIENTATION

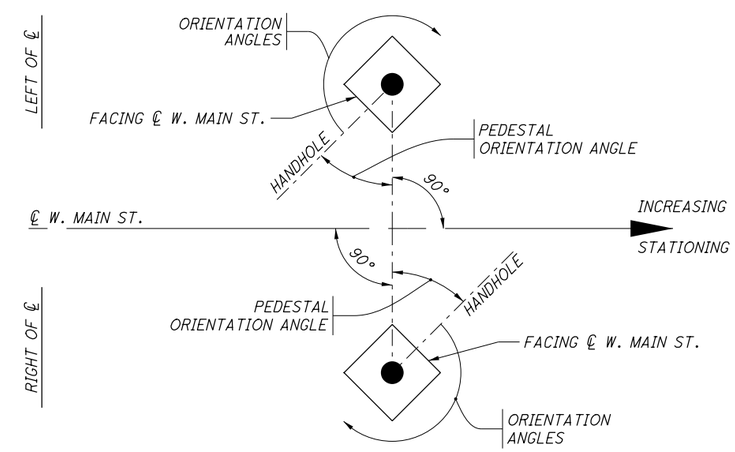

PEDESTAL ORIENTATION

MAST ARM TABLE (TEM FIGURE 498-37 & 38)

SUPPORT NO.	STATION	OFFSET	TYPE	ELEVATION		SUPPORT DETAILS												ORIENTATION ANGLES (SEE FIGURES ABOVE FOR DETAILS)							
				A (Pavt. Elev.)	B (Top of Found.)	DESIGN TYPE	DESIGN NO.	POLE HEIGHT	ARM HEIGHT	L	L1	L2	L3	L4	D1	D2	X	MAST ARM A ANGLE	PEDESTAL ANGLE	PEDESTRIAN SIGNAL	PEDESTRIAN PUSHBUTTON	POWER SERVICE	BRACKET ARM	HANDHOLE	CABLE ENTRANCE 12" FROM TOP
								FT	FT	FT	FT	FT	FT	FT	FT	FT	FT	DEG	DEG	DEG	DEG	DEG	DEG	DEG	DEG
SP-2	517+19.97	52.02 LT	SIGNAL	833.24	832.88	TC-81.22	13	21.5	20	60	39	45	51	57	-	-	-	0	-	0 / 90	90	-	-	180	-
SP-4	517+78.65	41.25 LT	SIGNAL	833.05	833.32	TC-81.22	2	30	20	32	18	23	29	-	25	-	10	90	-	0 / 90	90	135	270	180	135
SP-5	517+79.59	37.99 RT	SIGNAL	833.24	833.58	TC-81.22	2	21.5	20	32	13	19	25	31	-	-	-	0	-	180 / 270	270	-	-	180	-
SP-7	517+12.83	38.06 RT	SIGNAL	832.79	833.75	TC-81.22	2	21.5	20	31	15	21	27	-	31	-	-	90	-	0 / 90	0	-	-	180	-
SP-1	517+11.08	50.47 LT	PEDESTAL	-	833.00	DOES NOT APPLY		5	DOES NOT APPLY TO PEDESTAL SUPPORTS										0	-	0	-	-	0	-
SP-3	517+70.49	50.15 LT	PEDESTAL	-	833.27			5											0	-	270	-	-	0	-
SP-6	517+79.21	48.09 RT	PEDESTAL	-	833.56			5											0	-	0	-	-	0	-
SP-8	517+13.19	46.91 RT	PEDESTAL	-	833.83			5											0	-	0	-	-	0	-

CALCULATED GSH
CHECKED KRM

TRAFFIC SIGNAL DETAILS
OXFORD STREET & MAIN STREET

MIA-41-09.49

L:\TroyOH\19060901-00_WestMainCorridorImprov\108662\Roadway\Sheets\08662CP402.dgn 1/26/2022 5:29:16 PM ghansel

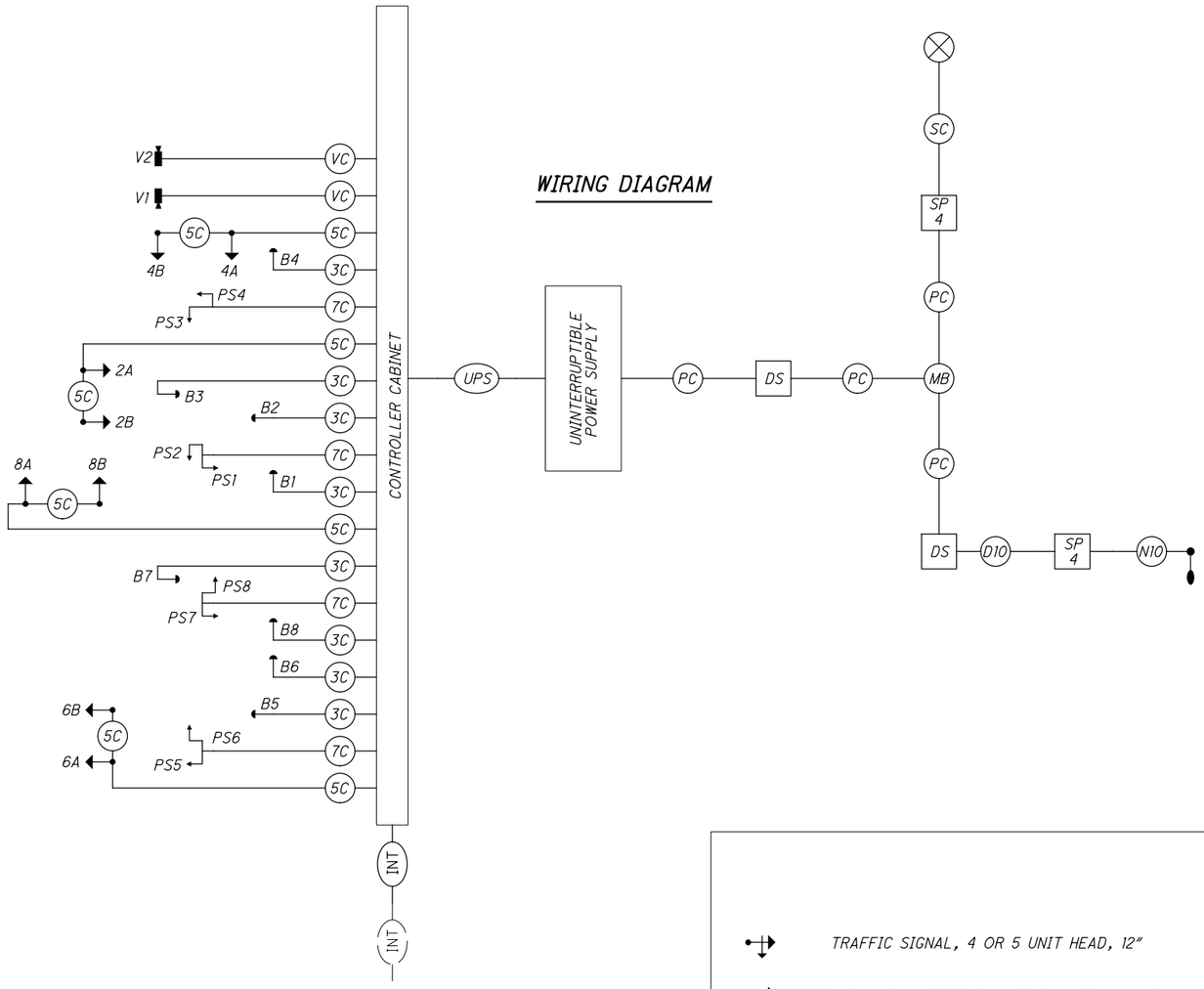

FIELD WIRING HOOK-UP CHART (TEM FORM 496-16)

SIGNAL HEAD	INDICATION	FIELD TERMINAL	FLASH
2A, 2B (WB)	R	ϕ2 R	R
	Y	ϕ2 Y	
	G	ϕ2 G	
4A, 4B (NB)	R	ϕ4 R	R
	Y	ϕ4 Y	
	G	ϕ4 G	
6A, 6B (EB)	R	ϕ6 R	R
	Y	ϕ6 Y	
	G	ϕ6 G	
8A, 8B (SB)	R	ϕ8 R	R
	Y	ϕ8 Y	
	G	ϕ8 G	
LS = LOAD SWITCH			

SIGNAL HEAD	INDICATION	FIELD TERMINAL	FLASH
PEDESTRIAN MOVEMENTS			
PED 2P NORTH	W	ϕ2 PED / LS 10 G	OUT
	DW	ϕ2 PED / LS 10 R	
PED 4P EAST	W	ϕ4 PED / LS 11 G	OUT
	DW	ϕ4 PED / LS 11 R	
PED 6P SOUTH	W	ϕ6 PED / LS 12 G	OUT
	DW	ϕ6 PED / LS 12 R	
PED 8P WEST	W	ϕ8 PED / LS 13 G	OUT
	DW	ϕ8 PED / LS 13 R	
NO OVERLAPS			

NOTES:

- FOR LOCATIONS WITH LEFT TURN LANES RUN 7C FOR POTENTIAL PT/PM LT PHASE IF INITIAL DESIGN IS FOR PERMITTED ONLY.
- OVERLAPS SHALL BE WIRED TO THE APPROPRIATE LOAD SWITCHES AS PER THE FIELD HOOKUP CHART AND CONFIGURED IN THE CONTROLLER SOFTWARE PER THE SIGNAL TIMING CHART.
- FIBER OPTIC CONNECTIONS TO BE DONE BY OTHERS.

LEGEND

- TRAFFIC SIGNAL, 4 OR 5 UNIT HEAD, 12"
- TRAFFIC SIGNAL, 2 UNIT, 3 UNIT, OR PHB HEAD 12"
- TRAFFIC SIGNAL, 3 UNIT HEAD, 12" WITH ARROWS
- PEDESTRIAN SIGNAL
- PEDESTRIAN PUSH BUTTON
- DILEMMA ZONE RADAR DETECTION UNIT
- VIDEO DETECTION CAMERA
- LUMINAIRE
- TWIN LIGHT POLE
- 3C — SIGNAL CABLE, 3 CONDUCTOR, NO. 14 AWG
- 5C — SIGNAL CABLE, 5 CONDUCTOR, NO. 14 AWG
- 7C — SIGNAL CABLE, 7 CONDUCTOR, NO. 14 AWG
- RC — RADAR DETECTION CABLE
- VC — VIDEO DETECTION CAMERA CABLE
- INT — PROP. FIBER CONNECTION (BY OTHERS)
- INT — Ex. Fiber Connection
- POWER SOURCE
- DUPLEX GFCI RECEPTACLE WITH IN-USE COVER
- SC — SERVICE CABLE, 3 CONDUCTOR, NO. 8 AWG
- PC — POWER CABLE, 2 CONDUCTOR, NO. 6 AWG
- SP 1 — SIGNAL SUPPORT POLE NO. __
- MB — METER BASE
- D10 — THREE RUNS OF NO. 10 AWG 600 VOLT DISTRIBUTION CABLE
- N10 — THREE RUNS OF NO. 10 AWG POLE & BRACKET CABLE
- DS — DISCONNECT SWITCH
- UPS — UNINTERRUPTIBLE POWER SUPPLY CABLE

CALCULATED GSH
CHECKED KRM

TRAFFIC SIGNAL DETAILS
OXFORD STREET & MAIN STREET

MIA-41-09.49

L:\TroyOH\19060901-00_WestMainCorridorImprov\108662\Roadway\Sheets\08662CP403.dgn 1/26/2022 5:29:26 PM ghansel

SUBSUMMARY

ITEM	QUAN.	UNIT	DESCRIPTION
625	1	EACH	CONNECTION, FUSED PULL APART
625	1	EACH	CONNECTION, UNFUSED PULL APART
625	1	EACH	BRACKET ARM, 10′
625	200	FT	NO. 10 AWG 600 VOLT DISTRIBUTION CABLE
625	50	FT	NO. 10 AWG POLE AND BRACKET CABLE
625	111	FT	CONDUIT, 2″, 725.05
625	82	FT	CONDUIT, 3″, 725.05
625	179	FT	CONDUIT, JACKED OR DRILLED, 4″, 725.04
625	1	EACH	LUMINAIRE, CONVENTIONAL, SOLID STATE (LED), 194W, TYPE III, 240V
625	181	FT	TRENCH
625	3	EACH	PULL BOX, 725.08, 18″
625	2	EACH	PULL BOX, 725.08, 24″
625	9	EACH	GROUND ROD
625	181	FT	UNDERGROUND WARNING/MARKING TAPE
630	6	EACH	SIGN HANGER ASSEMBLY, MAST ARM, AS PER PLAN
630	15	SF	SIGN, FLAT SHEET
630	4	EACH	SIGN, STREET NAME
632	8	EACH	VEHICULAR SIGNAL HEAD, (LED), 3-SECTION, 12″ LENS, 1-WAY, POLYCARBONATE, AS PER PLAN, BLACK, WITH BACKPLATE
632	8	EACH	PEDESTRIAN SIGNAL HEAD (LED), TYPE D2, COUNTDOWN, AS PER PLAN
632	8	EACH	COVERING OF VEHICULAR SIGNAL HEAD
632	8	EACH	COVERING OF PEDESTRIAN SIGNAL HEAD
632	8	EACH	PEDESTRIAN PUSHBUTTON
632	1070	FT	SIGNAL CABLE, 3 CONDUCTOR, NO. 14 AWG
632	750	FT	SIGNAL CABLE, 5 CONDUCTOR, NO. 14 AWG
632	530	FT	SIGNAL CABLE, 7 CONDUCTOR, NO. 14 AWG
632	4	EACH	SIGNAL SUPPORT FOUNDATION
632	4	EACH	PEDESTAL FOUNDATION
632	80	FT	POWER CABLE, 3 CONDUCTOR, NO. 6 AWG
632	210	FT	SERVICE CABLE, 3 CONDUCTOR, NO. 8 AWG
632	1	EACH	POWER SERVICE, AS PER PLAN
632	1	EACH	CONDUIT RISER, 2″ DIAMETER
632	2	EACH	SIGNAL SUPPORT, TYPE TC-81.22, DESIGN 2, AS PER PLAN
632	1	EACH	SIGNAL SUPPORT, TYPE TC-81.22, DESIGN 13, AS PER PLAN
632	1	EACH	COMBINATION SIGNAL SUPPORT, TYPE TC-81.22, DESIGN 2, AS PER PLAN
632	4	EACH	PEDESTAL, 5′, TRANSFORMER BASE, AS PER PLAN
633	1	EACH	CABINET FOUNDATION
633	1	EACH	CONTROLLER WORK PAD
633	1	EACH	UNINTERRUPTIBLE POWER SUPPLY (UPS), 1000 WATT, AS PER PLAN
633	1	EACH	CONTROLLER ITEM, MISC.: CABINET, TYPE TS-1, AS PER PLAN
633	1	EACH	CONTROLLER ITEM, MISC.: 10/100/1000 ETHERNET SWITCH, AS PER PLAN
809	1	EACH	ATC V6.24 CONTROLLER, AS PER PLAN
			ALTERNATE BID ITEMS
816	1	EACH	VIDEO DETECTION SYSTEM, AS PER PLAN (ALTERNATE BID A)
816	1	EACH	VIDEO DETECTION SYSTEM, AS PER PLAN (ALTERNATE BID B)

CALCULATED GSH
CHECKED KRM

TRAFFIC SIGNAL DETAILS
OXFORD STREET & MAIN STREET

MIA-41-09.49

L:\TroyOH\19060901-00_WestMainCorridorImprov\108662\Roadway\Sheets\08662CP404.dgn 1/26/2022 5:29:32 PM ghansel

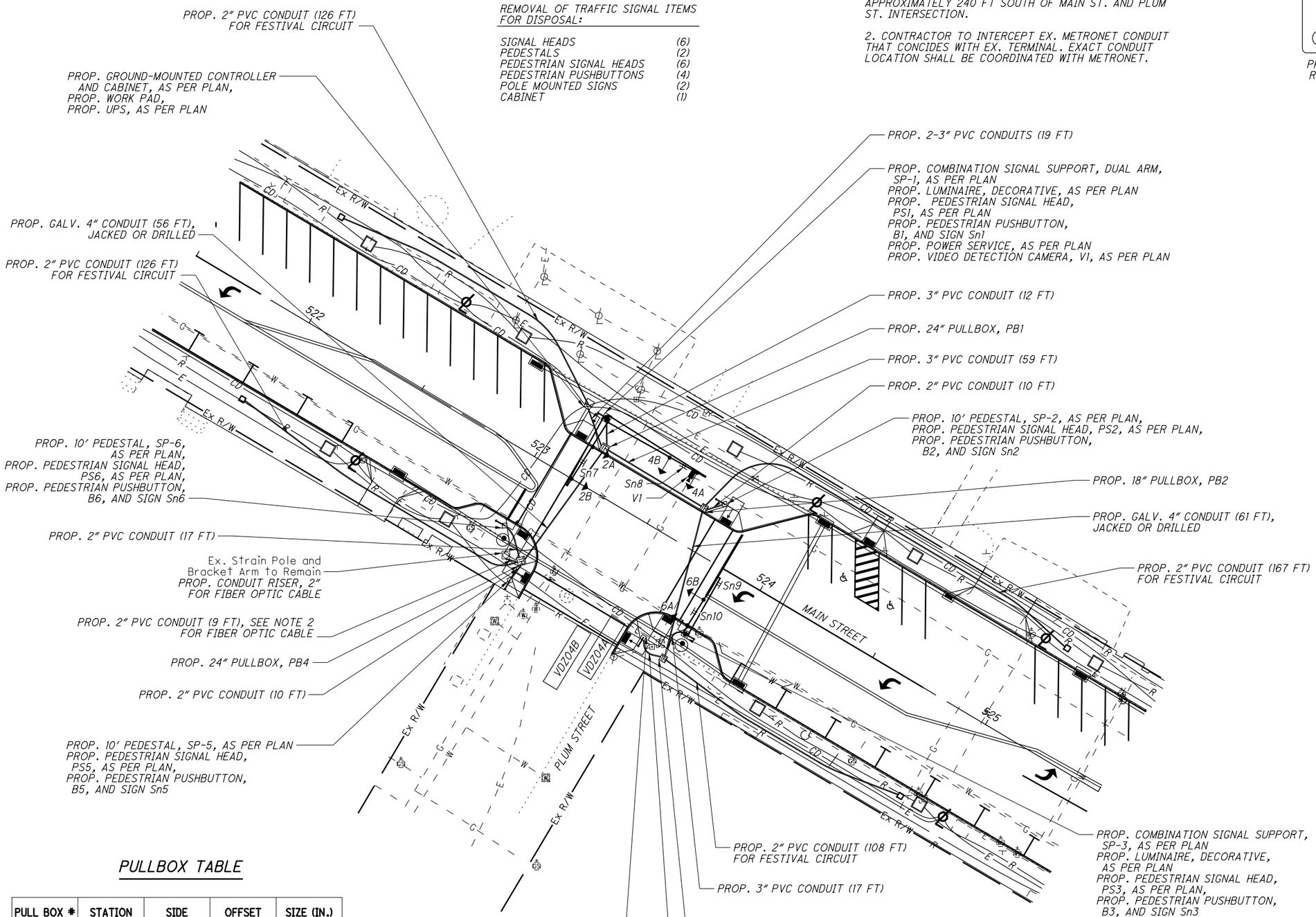

REMOVAL OF TRAFFIC SIGNAL ITEMS FOR DISPOSAL:

SIGNAL HEADS	(6)
PEDESTALS	(2)
PEDESTRIAN SIGNAL HEADS	(6)
PEDESTRIAN PUSHBUTTONS	(4)
POLE MOUNTED SIGNS	(2)
CABINET	(1)

NOTE:

1. POWER SHALL BE OBTAINED FROM EX. TRANSFORMER LOCATED BETWEEN PLUM ST. AND CHERRY ST. APPROXIMATELY 240 FT SOUTH OF MAIN ST. AND PLUM ST. INTERSECTION.

2. CONTRACTOR TO INTERCEPT EX. METRONET CONDUIT THAT CONCIDES WITH EX. TERMINAL. EXACT CONDUIT LOCATION SHALL BE COORDINATED WITH METRONET.

SIGNS

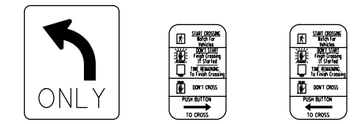

PROPOSED R3-5L-30 — Sn9

PROPOSED R10-3E(R)-9 — Sn1, Sn2, Sn3, Sn5

PROPOSED R10-3E(L)-9 — Sn4, Sn6

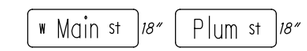

PROPOSED GREEN D3-1-60 — Sn8

PROPOSED GREEN D3-1-48 — Sn7, Sn10

SIGNAL HEADS

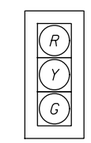

PROPOSED SIGNAL HEAD — 2A, 2B, 4A, 4B, 6A, 6B

PROPOSED PEDESTRIAN SIGNAL HEAD — PS1, PS2, PS3, PS4, PS5, PS6

PULLBOX TABLE

PULL BOX #	STATION	SIDE	OFFSET	SIZE (IN.)
PB1	523+21.37	LT	16.5	24
PB2	523+65.63	LT	16.25	18
PB3	523+81.50	RT	41.05	18
PB4	523+15.83	RT	37.26	24

LEGEND

	PROP	EXIST
TRAFFIC SIGNAL, 3 UNIT HEAD, 12"		
TRAFFIC SIGNAL, 4 OR 5 UNIT HEAD, 12"		
SIGNAL SUPPORT POLE		
PEDESTRIAN SIGNAL		
PEDESTRIAN PUSH BUTTON		
PEDESTAL SUPPORT		
LUMINAIRE		
CONTROLLER CABINET AND WORK PAD (TS-1)		
TRAFFIC PULL BOX		
VIDEO DETECTION CAMERA		
DETECTOR ZONE		

HORIZONTAL SCALE IN FEET 0 10 20 40

CALCULATED GSH
CHECKED KRM

TRAFFIC SIGNAL PLAN
PLUM STREET & MAIN STREET

MIA-41-09.49

L:\Troy,OH\19060901-00_WestMainCorridorImprov\108662\Roadway\Sheets\08662CP500.dgn 1/26/2022 5:31:49 PM ghansel

SIGNAL TIMING CHART (TEM FORM 496-3)

INTERSECTION: PLUM STREET & MAIN STREET
MAINTAINING AGENCY: CITY OF TROY

START UP								
START IN: ALL-RED FLASH	DUAL ENTRY: YES		PHASES:			2&6		
TIME FOR: FLASH , ALL RED (SEC.): 9, 6	REST IN RED:		RING 1	-		RING 2	-	
FIRST PHASE(S): 2, 6	OVERLAP			A	B	C	D	
COLOR DISPLAYED: YELLOW	PHASES			-	-	-	-	

INTERVAL OR FEATURE		CONTROLLER MOVEMENT NO.							
INTERSECTION MOVEMENT (PHASE)		1	2	3	4	5	6	7	8
DIRECTION		-	WB	-	NB	-	EB	-	-
MINIMUM GREEN (INITIAL)	(SEC.)	-	20	-	10	-	20	-	-
ADDED INITIAL	*(SEC./ACTUATION)	-	-	-	-	-	-	-	-
MAXIMUM INITIAL	(SEC.)	-	-	-	-	-	-	-	-
PASSAGE TIME (PRESET GAP)	(SEC.)	-	-	-	3	-	-	-	-
TIME BEFORE REDUCTION	*(SEC.)	-	-	-	-	-	-	-	-
MINIMUM GAP	*(SEC.)	-	-	-	-	-	-	-	-
TIME TO REDUCE	*(SEC.)	-	-	-	-	-	-	-	-
MAXIMUM GREEN I	(SEC.)	-	45	-	30	-	45	-	-
MAXIMUM GREEN II	(SEC.)	-	45	-	30	-	45	-	-
YELLOW CHANGE	(SEC.)	-	3.4	-	3.0	-	3.4	-	-
ALL RED CLEARANCE	(SEC.)	-	1.0	-	1.0	-	1.0	-	-
DELAYED GREEN (LPI) **	(SEC.)	-	-	-	-	-	-	-	-
FLASHING YELLOW ARROW DELAY *	(SEC.)	-	-	-	-	-	-	-	-
WALK	(SEC.)	-	9	-	9	-	9	-	-
PEDESTRIAN CLEARANCE	(SEC.)	-	9	-	9	-	9	-	-
RECALL MAXIMUM	(ON/OFF)	-	OFF	-	OFF	-	OFF	-	-
RECALL MINIMUM	(ON/OFF)	-	ON	-	OFF	-	ON	-	-
RECALL PEDESTRIAN	(ON/OFF)	-	OFF	-	OFF	-	OFF	-	-
MEMORY	(ON/OFF)	-	-	-	-	-	-	-	-

*VOLUME DENSITY CONTROLS

*FOR CROSSING WITH PEDESTRIAN PUSHBUTTONS, LPI'S (LEADING PEDESTRIAN INTERVALS) MAY BE IMPLEMENTED (3-6 SEC.) IN ACCORDANCE WITH LPI DURATION TIME PER THE ODOT SIGNAL CALCULATIONS - CLEARANCE INTERVALS SPREADSHEET.

NOTES:

- ϕ4 SHALL BE ACTUATED. THE PRIMARY THRU MOVEMENT SHOULD HAVE MIN RECALL ACTIVE TO REST IN GREEN.
- COUNTDOWN PEDESTRIAN SIGNALS SHALL GO TO ZERO ON YELLOW PER OMUTCD FIGURE 4E-2.
- ALL DETECTOR DELAYS SHALL BE PLACED IN THE CONTROLLER.

PHASING DIAGRAM

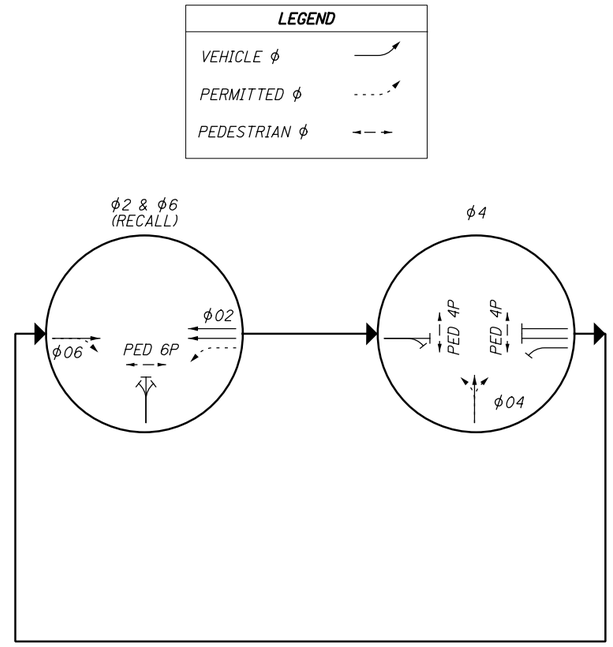

VIDEO DETECTION CHART (TEM FORM 496-4)

DETECTION ZONE	MOVEMENT	PULSE OR PRESENCE	ASSOCIATED PHASE	DELAY PROGRAMMED IN CONTROLLER (SEC.)	EXTENSION PROGRAMMED IN CONTROLLER (SEC.)	DETECTOR NO.	PURPOSE	DETECTION ZONE LENGTH (FT)
VDZ04A	NB	PRESENCE	4	-	-	V1	SL	25
VDZ04B	NB	PRESENCE	4	2	-	V1	SL	25

PURPOSE: STOP-LINE OR ADVANCED DETECTION

CALCULATED GSH
CHECKED KRM

TRAFFIC SIGNAL DETAILS
PLUM STREET & MAIN STREET

MIA-41-09.49

L:\TroyOH\19060901-00_WestMainCorridorImprov\108662\Roadway\Sheets\08662CP501.dgn 1/26/2022 5:32:00 PM ghansel

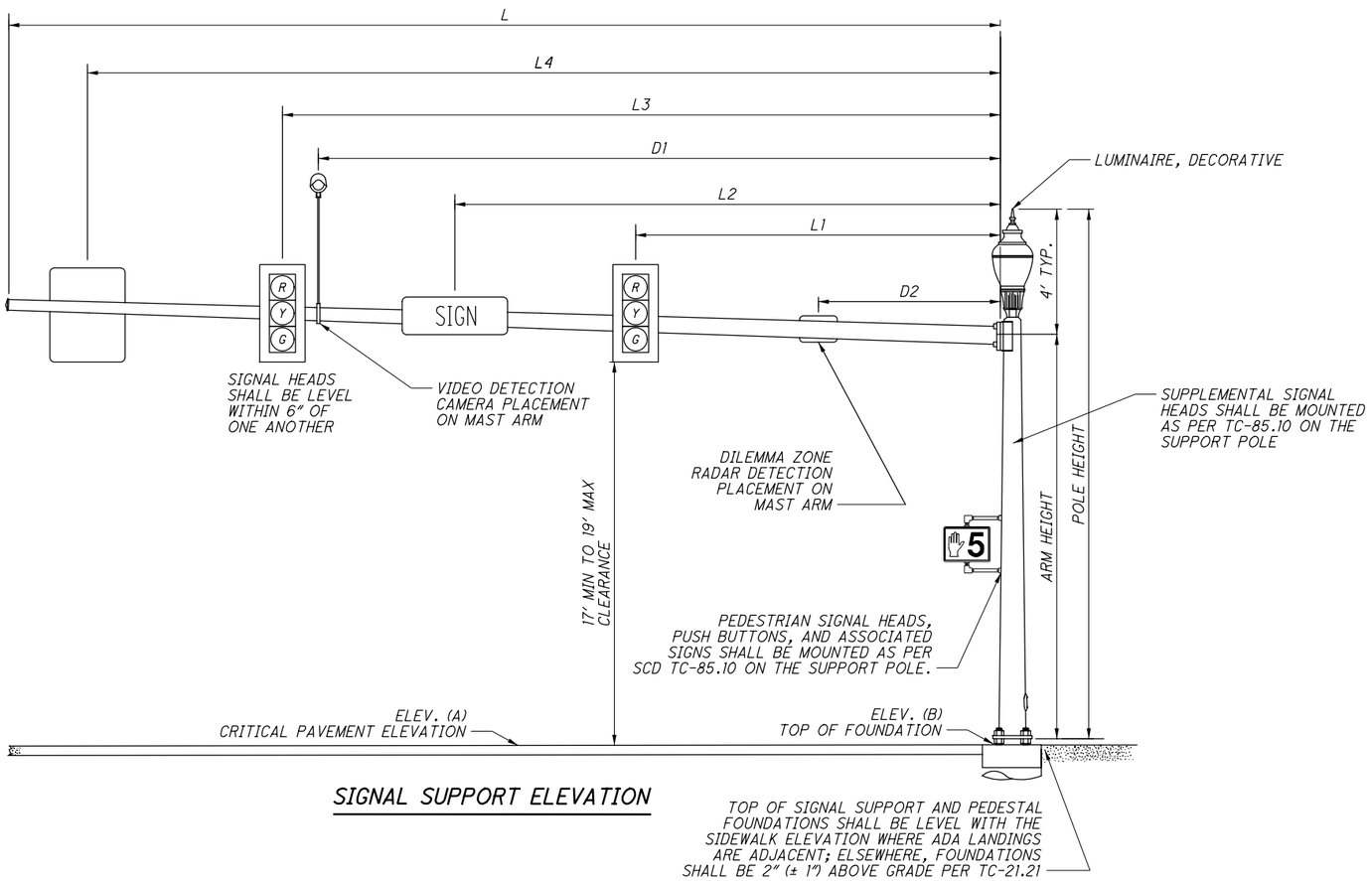

SIGNAL SUPPORT ELEVATION

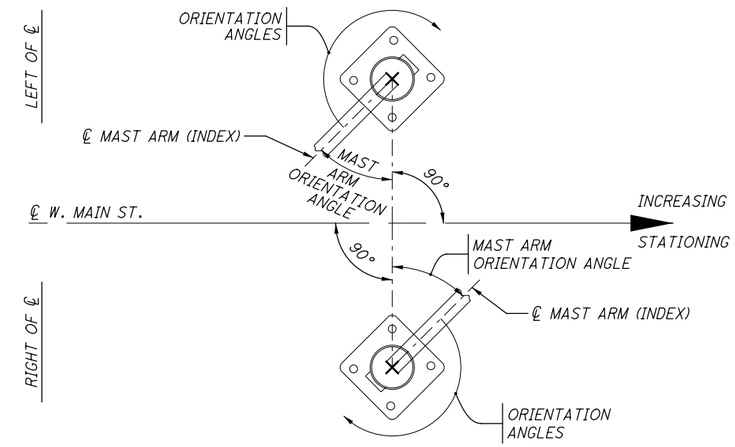

SIGNAL POLE ORIENTATION

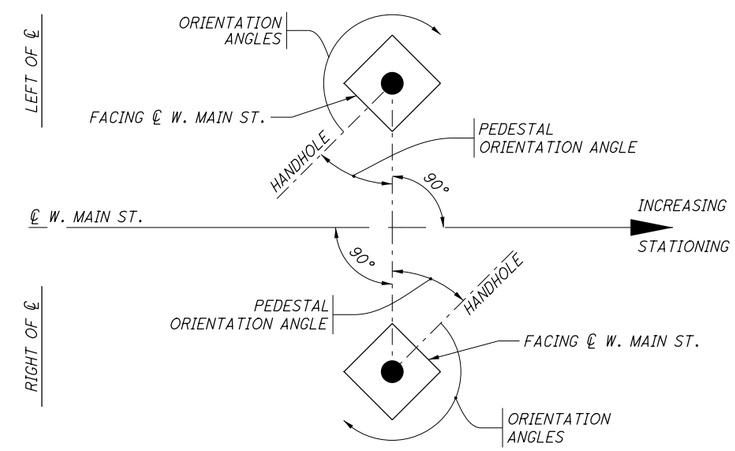

PEDESTAL ORIENTATION

MAST ARM TABLE (TEM FIGURE 498-37 & 38)

SUPPORT NO.	STATION	OFFSET	TYPE	ELEVATION A (Pavt. Elev.)	ELEVATION B (Top of Found.)	SUPPORT DETAILS DESIGN TYPE	DESIGN NO.	POLE HEIGHT	ARM HEIGHT	L	L1	L2	L3	L4	D1	D2	ORIENTATION ANGLES (SEE FIGURES ABOVE FOR DETAILS) MAST ARM A ANGLE	MAST ARM B ANGLE	PEDESTAL ANGLE	PEDESTRIAN SIGNAL	PEDESTRIAN PUSHBUTTON	POWER SERVICE	HANDHOLE	CABLE ENTRANCE 12" FROM TOP
								FT	FT	FT	FT	FT	FT	FT	FT	FT	DEG	DEG	DEG	DEG	DEG	DEG	DEG	DEG
SP-1	523+16.10	26.75 LT	SIGNAL	833.24	833.24	TC-12.31	6	24	20	28	10	17	25	-	-	-	0	-	-	90	90	135	180	153
										42	27	33	39	-	43	-	-	90	ANGLES RELATIVE TO MAST ARM SP-1A					
SP-3	523+84.01	28.75 RT	SIGNAL	833.23	833.26	TC-81.22	2	24	20	24	2	8	14	22	-	-	0	-	-	270	90	-	180	-
SP-2	523+71.61	21.45 LT	PEDESTAL	-	833.19	DOES NOT APPLY		10	DOES NOT APPLY TO PEDESTAL SUPPORTS									-	40	225	45	-	0	-
SP-4	523+70.86	38.12 RT	PEDESTAL	-	833.22			10										-	0	180	180	-	0	-
SP-5	523+15.95	45.30 RT	PEDESTAL	-	833.28			10										-	40	320	320	-	0	-
SP-6	523+03.55	28.34 RT	PEDESTAL	-	833.26			10										-	50	40	220	-	0	-

CALCULATED GSH
CHECKED KRM

TRAFFIC SIGNAL DETAILS
PLUM STREET & MAIN STREET

MIA-41-09.49

L:\TroyOH\19060901-00_WestMainCorridorImprov\108662\Roadway\Sheets\08662CP502.dgn 1/26/2022 5:32:06 PM ghansel

WIRING DIAGRAM

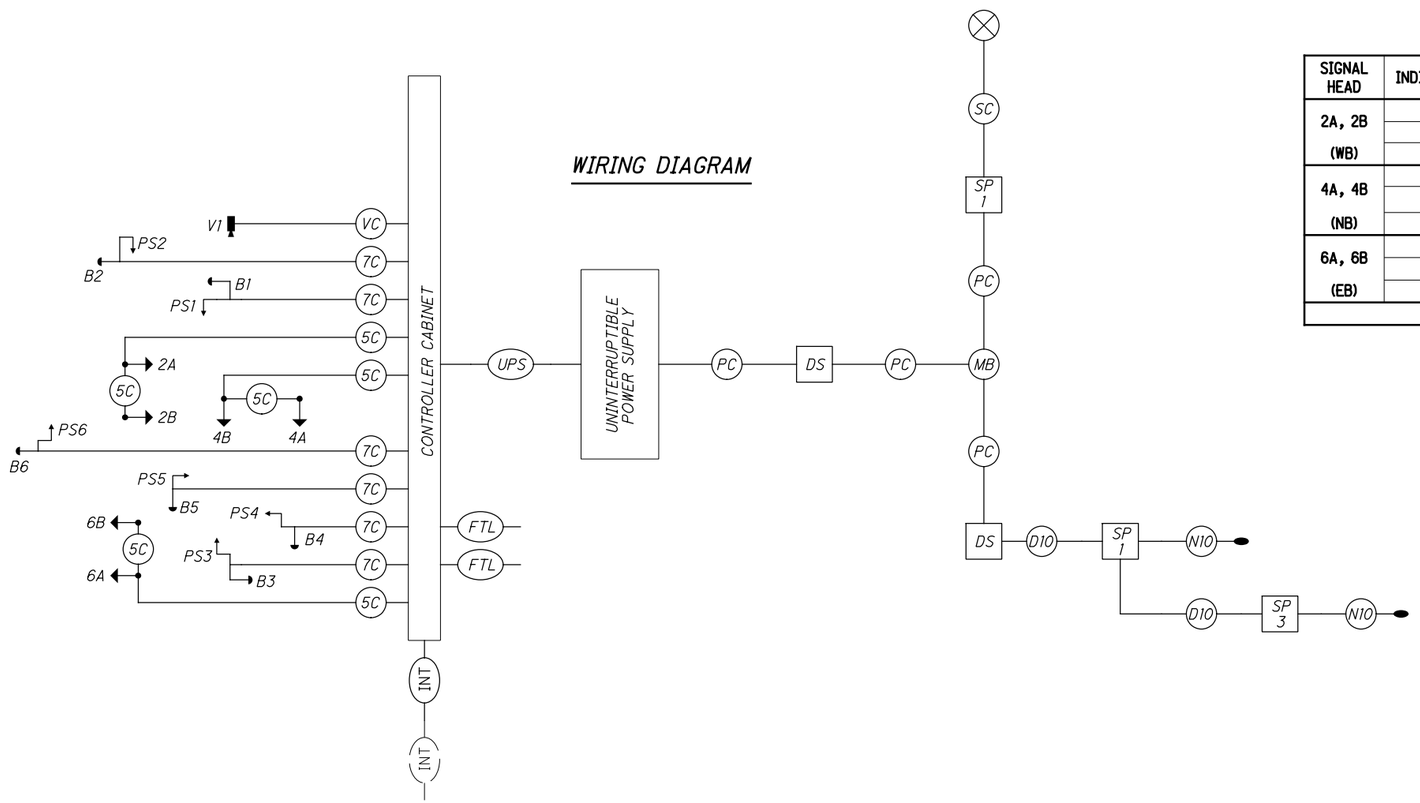

FIELD WIRING HOOK-UP CHART (TEM FORM 496-16)

SIGNAL HEAD	INDICATION	FIELD TERMINAL	FLASH
2A, 2B (WB)	R	ϕ2 R	R
	Y	ϕ2 Y	
	G	ϕ2 G	
4A, 4B (NB)	R	ϕ4 R	R
	Y	ϕ4 Y	
	G	ϕ4 G	
6A, 6B (EB)	R	ϕ6 R	R
	Y	ϕ6 Y	
	G	ϕ6 G	
LS = LOAD SWITCH			

SIGNAL HEAD	INDICATION	FIELD TERMINAL	FLASH
PEDESTRIAN MOVEMENTS			
PED 4P EAST	W	ϕ4 PED / LS 10 G	OUT
	DW	ϕ4 PED / LS 10 R	
PED 6P SOUTH	W	ϕ6 PED / LS 11 G	OUT
	DW	ϕ6 PED / LS 11 R	
PED 4P WEST	W	ϕ8 PED / LS 12 G	OUT
	DW	ϕ8 PED / LS 12 R	
NO OVERLAPS			

LEGEND

TRAFFIC SIGNAL, 4 OR 5 UNIT HEAD, 12"	3C	SIGNAL CABLE, 3 CONDUCTOR, NO. 14 AWG	SC — SERVICE CABLE, 3 CONDUCTOR, NO. 8 AWG
TRAFFIC SIGNAL, 2 UNIT, 3 UNIT, OR PHB HEAD 12"	5C	SIGNAL CABLE, 5 CONDUCTOR, NO. 14 AWG	PC — POWER CABLE, 2 CONDUCTOR, NO. 6 AWG
TRAFFIC SIGNAL, 3 UNIT HEAD, 12" WITH ARROWS	7C	SIGNAL CABLE, 7 CONDUCTOR, NO. 14 AWG	SP 1 — SIGNAL SUPPORT POLE NO. __
PEDESTRIAN SIGNAL	RC	RADAR DETECTION CABLE	MB — METER BASE
PEDESTRIAN PUSH BUTTON	VC	VIDEO DETECTION CAMERA CABLE	D10 — THREE RUNS OF NO. 10 AWG 600 VOLT DISTRIBUTION CABLE
DILEMMA ZONE RADAR DETECTION UNIT	INT	PROP. FIBER CONNECTION (BY OTHERS)	N10 — THREE RUNS OF NO. 10 AWG POLE & BRACKET CABLE
VIDEO DETECTION CAMERA	INT	Ex. Fiber Connection	DS — DISCONNECT SWITCH
LUMINAIRE, DECORATIVE		POWER SOURCE	UPS — UNINTERRUPTIBLE POWER SUPPLY CABLE
TWIN LIGHT POLE		DUPLEX GFCI RECEPTACLE WITH IN-USE COVER	FTL — FESTIVAL CIRCUIT (BY OTHERS)

NOTES:

- FOR LOCATIONS WITH LEFT TURN LANES RUN 7C FOR POTENTIAL PT/PM LT PHASE IF INITIAL DESIGN IS FOR PERMITTED ONLY.
- OVERLAPS SHALL BE WIRED TO THE APPROPRIATE LOAD SWITCHES AS PER THE FIELD HOOKUP CHART AND CONFIGURED IN THE CONTROLLER SOFTWARE PER THE SIGNAL TIMING CHART.
- FIBER OPTIC CONNECTIONS TO BE DONE BY OTHERS.
- FESTIVAL CIRCUIT CONNECTIONS TO BE DONE BY OTHERS.

CALCULATED GSH
CHECKED KRM

TRAFFIC SIGNAL DETAILS
PLUM STREET & MAIN STREET

MIA-41-09.49

L:\TroyOH\19060901-00_WestMainCorridorImprov\108662\Roadway\Sheets\08662CP503.dgn 1/26/2022 5:32:15 PM ghansel

SUBSUMMARY

ITEM	QUAN.	UNIT	DESCRIPTION
625	2	EACH	CONNECTION, FUSED PULL APART
625	2	EACH	CONNECTION, UNFUSED PULL APART
625	570	FT	NO. 10 AWG 600 VOLT DISTRIBUTION CABLE
625	65	FT	NO. 10 AWG POLE AND BRACKET CABLE
625	587	FT	CONDUIT, 2", 725.05
625	126	FT	CONDUIT, 3", 725.05
625	117	FT	CONDUIT, JACKED OR DRILLED, 4", 725.04
625	2	EACH	LUMINAIRE, DECORATIVE, AS PER PLAN
625	694	FT	TRENCH
625	2	EACH	PULL BOX, 725.08, 18"
625	2	EACH	PULL BOX, 725.08, 24"
625	7	EACH	GROUND ROD
625	694	FT	UNDERGROUND WARNING/MARKING TAPE
630	4	EACH	SIGN HANGER ASSEMBLY, MAST ARM, AS PER PLAN
630	8	SF	SIGN, FLAT SHEET
630	3	EACH	SIGN, STREET NAME
632	6	EACH	VEHICULAR SIGNAL HEAD, (LED), 3-SECTION, 12" LENS, 1-WAY, POLYCARBONATE, AS PER PLAN, BLACK, WITH BACKPLATE
632	6	EACH	PEDESTRIAN SIGNAL HEAD (LED), TYPE D2, COUNTDOWN, AS PER PLAN
632	6	EACH	COVERING OF VEHICULAR SIGNAL HEAD
632	6	EACH	COVERING OF PEDESTRIAN SIGNAL HEAD
632	6	EACH	PEDESTRIAN PUSHBUTTON
632	460	FT	SIGNAL CABLE, 5 CONDUCTOR, NO. 14 AWG
632	760	FT	SIGNAL CABLE, 7 CONDUCTOR, NO. 14 AWG
632	2	EACH	SIGNAL SUPPORT FOUNDATION
632	4	EACH	PEDESTAL FOUNDATION
632	70	FT	POWER CABLE, 3 CONDUCTOR, NO. 6 AWG
632	450	FT	SERVICE CABLE, 3 CONDUCTOR, NO. 8 AWG
632	1	EACH	POWER SERVICE, AS PER PLAN
632	1	EACH	CONDUIT RISER, 2" DIAMETER
632	4	EACH	PEDESTAL, 10', TRANSFORMER BASE, AS PER PLAN
632	1	EACH	REMOVAL OF TRAFFIC SIGNAL INSTALLATION
633	1	EACH	CABINET FOUNDATION
633	1	EACH	CONTROLLER WORK PAD
633	1	EACH	UNINTERRUPTIBLE POWER SUPPLY (UPS), 1000 WATT, AS PER PLAN
633	1	EACH	CONTROLLER ITEM, MISC.: CABINET, TYPE TS-1, AS PER PLAN (PLUM ST)
633	1	EACH	CONTROLLER ITEM, MISC.: 10/100/1000 ETHERNET SWITCH, AS PER PLAN
809	1	EACH	ATC V6.24 CONTROLLER, AS PER PLAN
			ALTERNATE BID ITEMS
632	1	EACH	COMBINATION SIGNAL SUPPORT, TYPE TC-12.31 DESIGN 6 POLE, WITH MAST ARMS TC-81.22 DESIGN 12 AND DESIGN 2, AS PER PLAN (ALTERNATE BID A)
632	1	EACH	COMBINATION SIGNAL SUPPORT, TYPE TC-81.22, DESIGN 2, AS PER PLAN (ALTERNATE BID A)
632	1	EACH	COMBINATION SIGNAL SUPPORT, TYPE TC-12.31 DESIGN 6 POLE, WITH MAST ARMS TC-81.22 DESIGN 12 AND DESIGN 2, AS PER PLAN (ALTERNATE BID B)
632	1	EACH	COMBINATION SIGNAL SUPPORT, TYPE TC-81.22, DESIGN 2, AS PER PLAN (ALTERNATE BID B)
816	1	EACH	VIDEO DETECTION SYSTEM, AS PER PLAN (ALTERNATE BID A)
816	1	EACH	VIDEO DETECTION SYSTEM, AS PER PLAN (ALTERNATE BID B)

CALCULATED GSH
CHECKED KRM

TRAFFIC SIGNAL DETAILS
PLUM STREET & MAIN STREET

MIA-41-09.49

L:\TroyOH\19060901-00_WestMainCorridorImprov\108662\Roadway\Sheets\08662CP504.dgn 1/26/2022 5:32:21 PM ghansel

COORDINATION TIMING CHART (TEM FORM 496-5)

RIDGE AVENUE										
PHASE	1	2	3	4	5	6	7	8	OFFSET 1 (SEC)	OFFSET 2 (SEC)
DIRECTION	-	WB	-	NB	WB-LT	EB	-	SB		
PLAN NO. OR C/S/O	SPLITS (G+Y+AR) IN SECONDS									
1/1/1	-	56	-	19	12	44	-	19	43	-
2/1/1	-	63	-	22	13	50	-	22	44	-
3/1/1	-	62	-	28	13	49	-	28	36	-
4/1/1	-	68	-	32	13	55	-	32	47	-
-	-	-	-	-	-	-	-	-	-	-

ELM STREET										
PHASE	1	2	3	4	5	6	7	8	OFFSET 1 (SEC)	OFFSET 2 (SEC)
DIRECTION	EB-LT	WB	-	NB	-	EB	-	SB		
PLAN NO. OR C/S/O	SPLITS (G+Y+AR) IN SECONDS									
1/1/1	13	36	-	26	-	49	-	26	10	-
2/1/1	20	38	-	27	-	58	-	27	1	-
3/1/1	15	41	-	34	-	56	-	34	77	-
4/1/1	16	47	-	37	-	63	-	37	84	-
-	-	-	-	-	-	-	-	-	-	-

ADAMS STREET										
PHASE	1	2	3	4	5	6	7	8	OFFSET 1 (SEC)	OFFSET 2 (SEC)
DIRECTION	EB-LT	WB	-	NB	-	EB	-	SB		
PLAN NO. OR C/S/O	SPLITS (G+Y+AR) IN SECONDS									
1/1/1	14	27	-	34	-	41	-	34	0	-
2/1/1	20	31	-	34	-	51	-	34	0	-
3/1/1	21	35	-	34	-	56	-	34	0	-
4/1/1	24	41	-	35	-	65	-	35	0	-
-	-	-	-	-	-	-	-	-	-	-

OXFORD STREET										
PHASE	1	2	3	4	5	6	7	8	OFFSET 1 (SEC)	OFFSET 2 (SEC)
DIRECTION	-	WB	-	NB	-	EB	-	SB		
PLAN NO. OR C/S/O	SPLITS (G+Y+AR) IN SECONDS									
1/1/1	-	48	-	27	-	48	-	27	11	-
2/1/1	-	57	-	28	-	57	-	28	2	-
3/1/1	-	63	-	27	-	63	-	27	87	-
4/1/1	-	73	-	27	-	73	-	27	3	-
-	-	-	-	-	-	-	-	-	-	-

PLUM STREET										
PHASE	1	2	3	4	5	6	7	8	OFFSET 1 (SEC)	OFFSET 2 (SEC)
DIRECTION	-	WB	-	NB	-	EB	-	-		
PLAN NO. OR C/S/O	SPLITS (G+Y+AR) IN SECONDS									
1/1/1	-	53	-	22	-	53	-	-	20	-
2/1/1	-	63	-	22	-	63	-	-	15	-
3/1/1	-	68	-	22	-	68	-	-	10	-
4/1/1	-	78	-	22	-	78	-	-	95	-
-	-	-	-	-	-	-	-	-	-	-

CORRIDOR LAYOUT

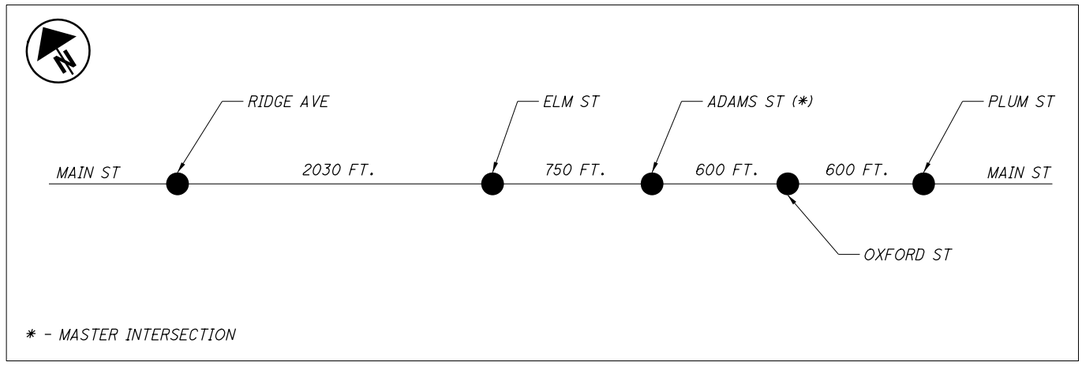

COORDINATION TIMING PLANS

DAY(S) OF WEEK	PLAN NAME	HOURS	PLAN NO. OR CYCLE/SPLIT/OFFSET	CYCLE LENGTH (SEC)
M-F	FREE	0:00 TO 6:00	-	-
M-F	AM PEAK	6:00 TO 10:00	2/1/1	85
M-F	MID PEAK	10:00 TO 14:30	3/1/1	90
M-F	PM PEAK	14:30 TO 19:00	4/1/1	100
M-F	OFF PEAK	19:00 TO 22:00	1/1/1	75
M-F	FREE	22:00 TO 24:00	-	-
SAT-SUN	FREE	0:00 TO 7:00	-	-
SAT-SUN	MID PEAK	7:00 TO 19:00	3/1/1	90
SAT-SUN	FREE	19:00 TO 24:00	-	-

NOTES:

- *OFFSETS ARE MEASURED FROM REFERENCE PHASE(S) NUMBERED "END OF GREEN/BEGINNING OF YELLOW."*
- *MASTER INTERSECTION OFFSET REFERENCE IS ALWAYS EQUAL TO ZERO.*
- $\Sigma\phi 1+\phi 2 = \Sigma\phi 5+\phi 6$ *AND* $\Sigma\phi 3+\phi 4 = \Sigma\phi 7+\phi 8$
- *CONTRACTOR TO PERFORM ITEM 824 SYSTEM ANALYSIS TO THE FIVE SIGNALIZED INTERSECTIONS SHOWN ON THE SIGNAL PLANS AFTER COMPLETION OF CONSTRUCTION, AND MAKE FIELD ADJUSTMENTS TO THE PROPOSED COORDINATION TIMING AS NEEDED.*

ECONOLITE COORD SETTINGS	
MANUAL PATTERN	AUTO
SYSTEM SOURCE	SYS
SPLITS IN	SECONDS
TRANSITION	SMOOTH
DWELL/ADD TIME	0
OFFSET REFERNECE	YELLOW
PED RECALL	NO
LOCAL ZERO OVERRIDE	NO
RE-SYNC COUNT	0
ECPI COORD	YES
SYSTEM FORMAT	STD
OFFSET IN	SECONDS
MAX SELECT	MAXINH
FORCE OFF	FLOAT
USE PED TIME	YES
PED RESERVICE	NO
FO ADD INI GRN	NO
MULTISYNC	NO

CALCULATED GSH
CHECKED KRM

TRAFFIC SIGNAL COORDINATION PLAN

MIA-41-09.49

L:\TroyOH\19060901-00_WestMainCorridorImprov\108662\Roadway\Sheets\08662CP600.dgn 1/26/2022 5:32:31 PM ghansel

LIGHT POLE IDENTIFICATION

LIGHTING UNIT NUMBER — BRANCH CIRCUIT

A1-2, STA. 492+82.0, 31.5' LT

POLE LOCATION

EQUIPMENT NOMENCLATURE

- DECORATIVE LIGHT POLE (18 FT) AND LUMINAIRE (100W, LED, TYPE III, 240V)
- CONVENTIONAL LIGHT POLE (30 FT, 10 FT ARM) AND LUMINAIRE (194W, LED, TYPE III, 240V)
- TWIN CONVENTIONAL LIGHT POLE (30 FT, 10 FT ARM) AND TWO LUMINAIRE (194W, LED, TYPE III, 240V)
- LIGHTING CONTROLLER
- —E— PROPOSED 2" SCH. 40 PVC CONDUIT WITH 2-#10, #10 GND AND 2-#8, 1-#8 GND IF RECEPTACLE AT POLE LOCATION.
- —CD— PROPOSED 2" SCH. 40 PVC CONDUIT WITH PULL STRING
- —R— PROPOSED 2" SCH. 40 PVC CONDUIT WITH 2-#8, 1-#8 GND FOR TREE RECEPTACLES.

GENERAL NOTE

1. CITY OF TROY TO OWN CONVENTIONAL FIXTURE A'S AND POST-TOP DECORATIVE LATERN/ACORN B'S. MVLT TO OWN ALL CONVENTIONAL FIXTURE C'S.
2. LIGHTING CONTRACTOR TO PROVIDE 2-#2, 1-#2 NEUTRAL, 1-#8 GND TO FESTIVAL PULLBOXES FROM SIGNAL CONTROLLER AT INTERSECTION OF MAIN AND PLUM. SIGNAL CONTRACTOR TO PROVIDE CONDUIT.
3. CONTRACTOR SHALL JACK OR DRILL ANY CONDUIT CROSSING TO THE ROAD. CONTRACTOR SHALL JACK OR DRILL CONDUIT UNDER RAILROAD TRACKS.

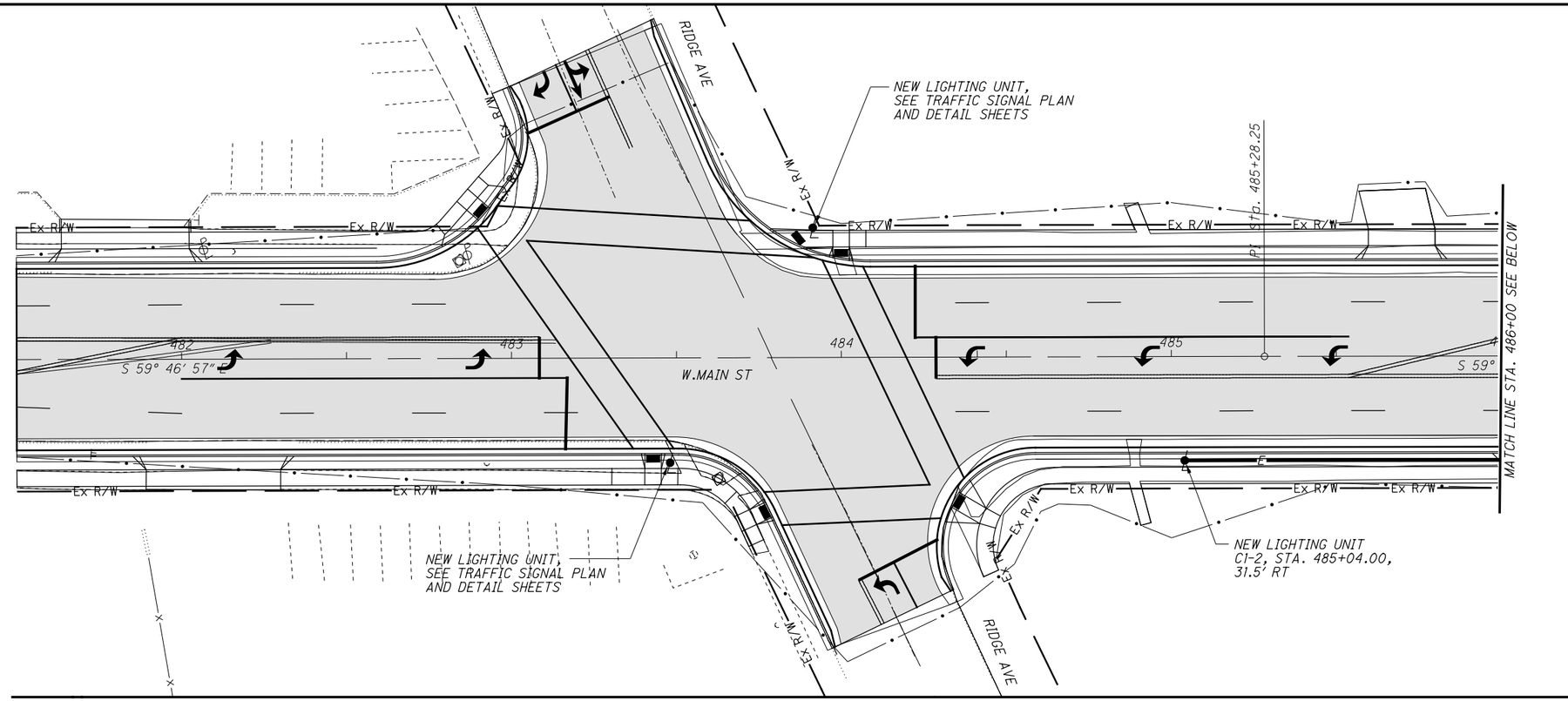

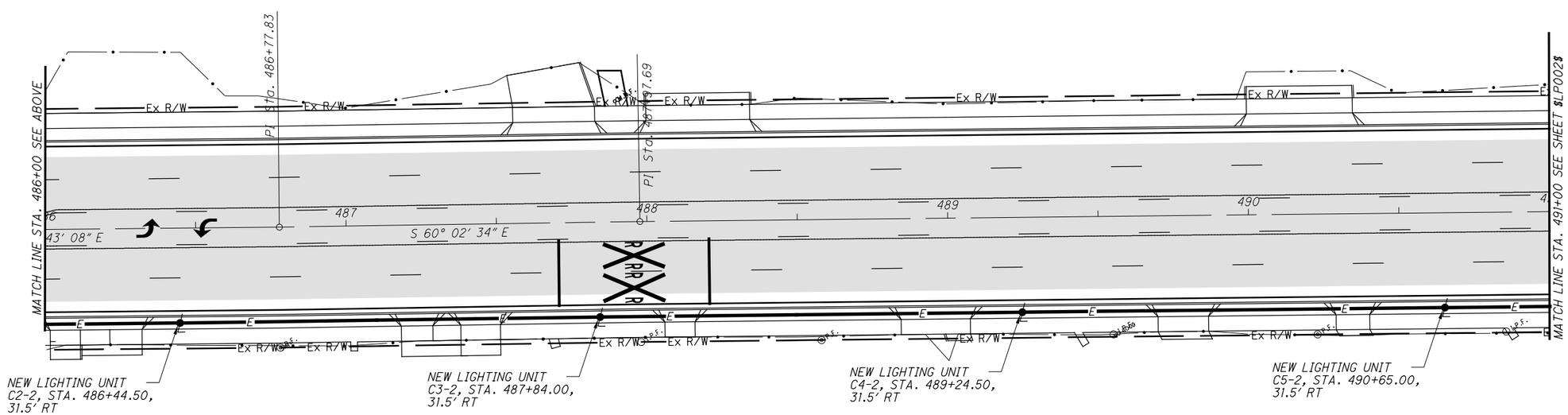

HORIZONTAL SCALE IN FEET 0 10 20 40

CALCULATED RH CHECKED SRI

LIGHTING LAYOUT PLAN STA. 491+00 TO STA. 501+00

MIA-41-09.49

L:\TroyOH\19060901-00_WestMainCorridorImprov\108662\Roadway\Sheets\108662_LP001.dgn 1/27/2022 11:27:42 AM ghansel

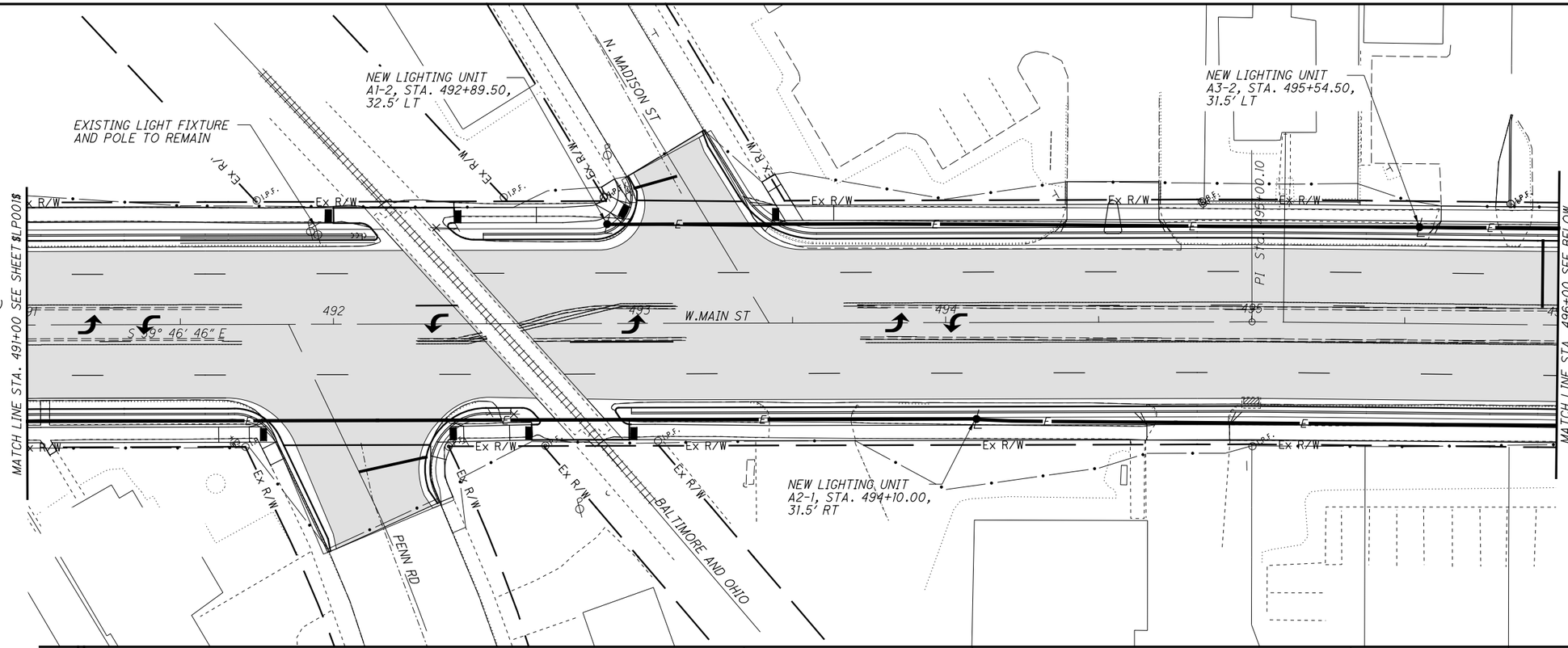

EQUIPMENT NOMENCLATURE

- DECORATIVE LIGHT POLE (18 FT) AND LUMINAIRE (100W, LED, TYPE III, 240V)
- CONVENTIONAL LIGHT POLE (30 FT, 10 FT ARM) AND LUMINAIRE (194W, LED, TYPE III, 240V)
- TWIN CONVENTIONAL LIGHT POLE (30 FT, 10 FT ARM) AND TWO LUMINAIRE (194W, LED, TYPE III, 240V)
- LIGHTING CONTROLLER
- —E— PROPOSED 2" SCH. 40 PVC CONDUIT WITH 2-#10, #10 GND AND 2-#8, 1-#8 GND IF RECEPTACLE AT POLE LOCATION.
- —CD— PROPOSED 2" SCH. 40 PVC CONDUIT WITH PULL STRING
- —R— PROPOSED 2" SCH. 40 PVC CONDUIT WITH 2-#8, 1-#8 GND FOR TREE RECEPTACLES.

LIGHT POLE IDENTIFICATION

LIGHTING UNIT NUMBER — A1-1, — BRANCH CIRCUIT — STA. 492+82.0, 31.5' LT — POLE LOCATION

GENERAL NOTE

1. CITY OF TROY TO OWN CONVENTIONAL FIXTURE A'S AND POST-TOP DECORATIVE LATERN/ACORN B'S. MVLT TO OWN ALL CONVENTIONAL FIXTURE C'S.
2. LIGHTING CONTRACTOR TO PROVIDE 2-#2, 1-#2 NEUTRAL, 1-#8 GND TO FESTIVAL PULLBOXES FROM SIGNAL CONTROLLER AT INTERSECTION OF MAIN AND PLUM. SIGNAL CONTRACTOR TO PROVIDE CONDUIT.
3. CONTRACTOR SHALL JACK OR DRILL ANY CONDUIT CROSSING TO THE ROAD. CONTRACTOR SHALL JACK OR DRILL CONDUIT UNDER RAILROAD TRACKS.

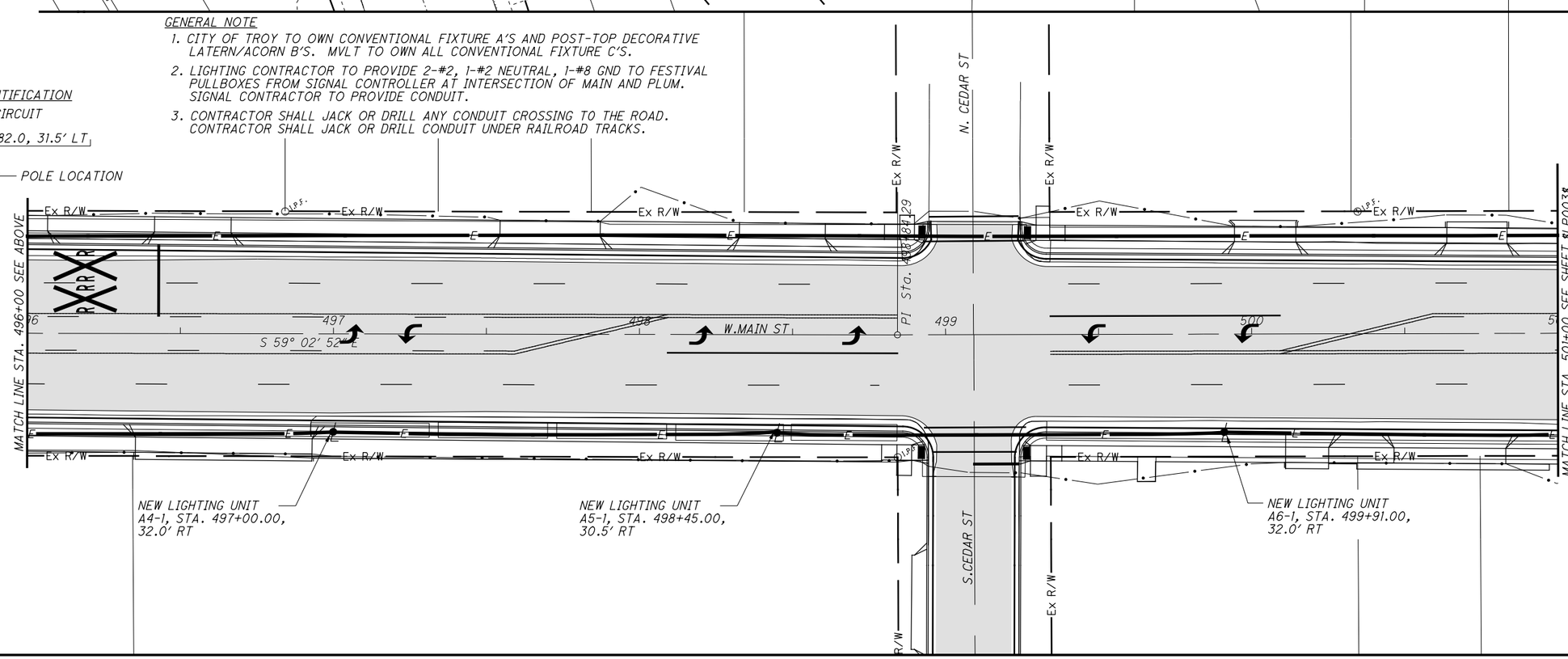

HORIZONTAL SCALE IN FEET 0 10 20 40

CALCULATED RH CHECKED SRI

LIGHTING LAYOUT PLAN
STA. 491+00 TO STA. 501+00

MIA-41-09.49

L:\TroyOH\19060901-00_WestMainCorridorImprov\108662\Roadway\Sheets\108662_LP002.dgn 1/27/2022 11:07:41 AM ghansel

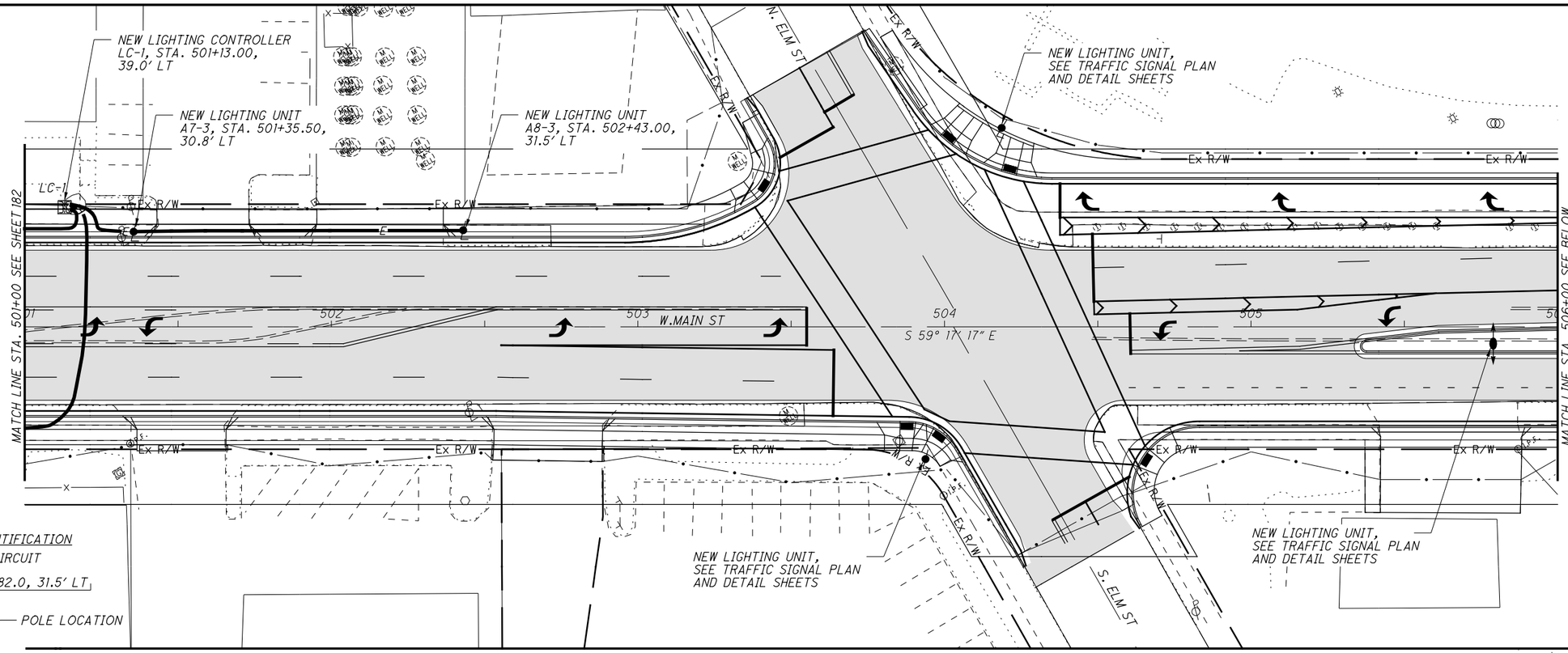

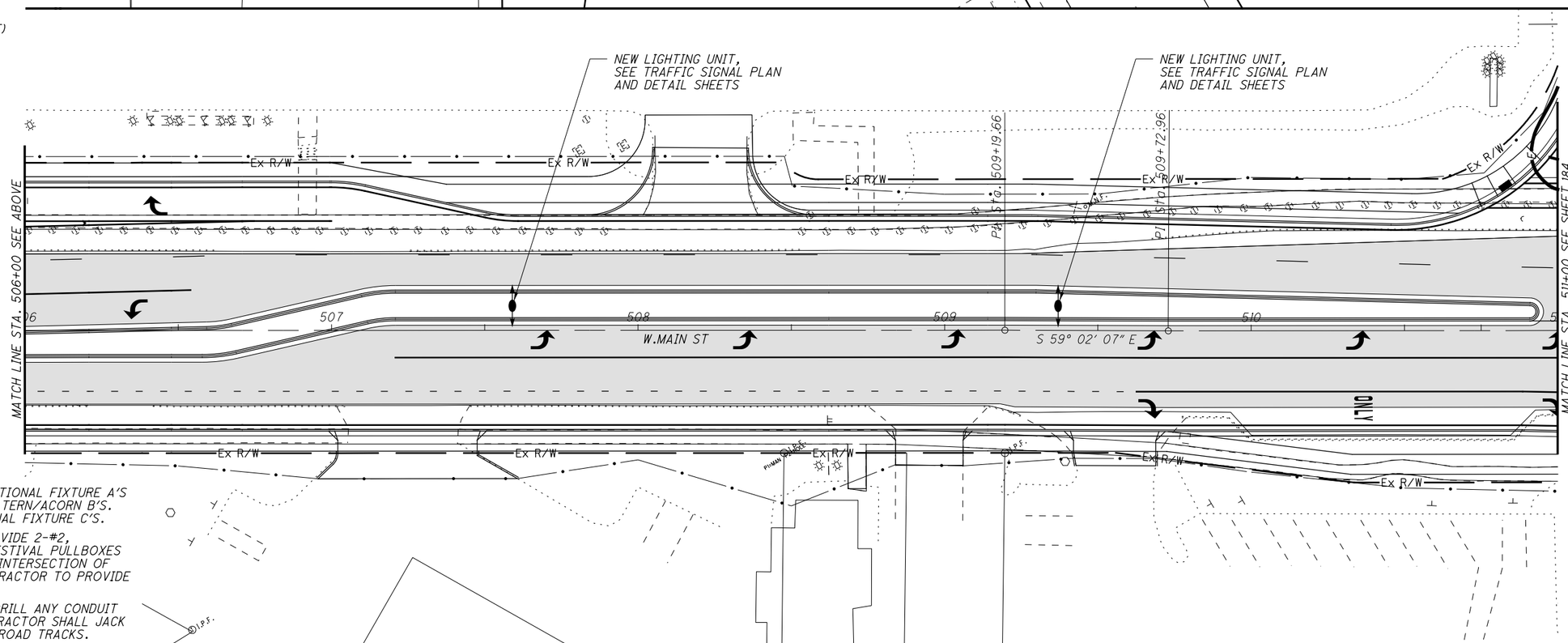

LIGHT POLE IDENTIFICATION

LIGHTING UNIT NUMBER — BRANCH CIRCUIT

A1-1, STA. 492+82.0, 31.5' LT

POLE LOCATION

EQUIPMENT NOMENCLATURE

- DECORATIVE LIGHT POLE (18 FT) AND LUMINAIRE (100W, LED, TYPE III, 240V)
- CONVENTIONAL LIGHT POLE (30 FT, 10 FT ARM) AND LUMINAIRE (194W, LED, TYPE III, 240V)
- TWIN CONVENTIONAL LIGHT POLE (30 FT, 10 FT ARM) AND TWO LUMINAIRE (194W, LED, TYPE III, 240V)
- LIGHTING CONTROLLER
- —E— PROPOSED 2" SCH. 40 PVC CONDUIT WITH 2-#10, #10 GND AND 2-#8, 1-#8 GND IF RECEPTACLE AT POLE LOCATION.
- —CD— PROPOSED 2" SCH. 40 PVC CONDUIT WITH PULL STRING
- —R— PROPOSED 2" SCH. 40 PVC CONDUIT WITH 2-#8, 1-#8 GND FOR TREE RECEPTACLES.

GENERAL NOTE

1. CITY OF TROY TO OWN CONVENTIONAL FIXTURE A'S AND POST-TOP DECORATIVE LATERN/ACORN B'S. MVLT TO OWN ALL CONVENTIONAL FIXTURE C'S.
2. LIGHTING CONTRACTOR TO PROVIDE 2-#2, 1-#2 NEUTRAL, 1-#8 GND TO FESTIVAL PULLBOXES FROM SIGNAL CONTROLLER AT INTERSECTION OF MAIN AND PLUM. SIGNAL CONTRACTOR TO PROVIDE CONDUIT.
3. CONTRACTOR SHALL JACK OR DRILL ANY CONDUIT CROSSING TO THE ROAD. CONTRACTOR SHALL JACK OR DRILL CONDUIT UNDER RAILROAD TRACKS.

HORIZONTAL SCALE IN FEET 0 10 20 40

CALCULATED RH CHECKED SRI

LIGHTING LAYOUT PLAN
STA. 501+00 TO STA. 511+00

MIA-41-09.49

L:\TroyOH\19060901-00_WestMainCorridorImprov\108662\Roadway\Sheets\108662_LP003.dgn 1/26/2022 5:36:53 PM ghansel

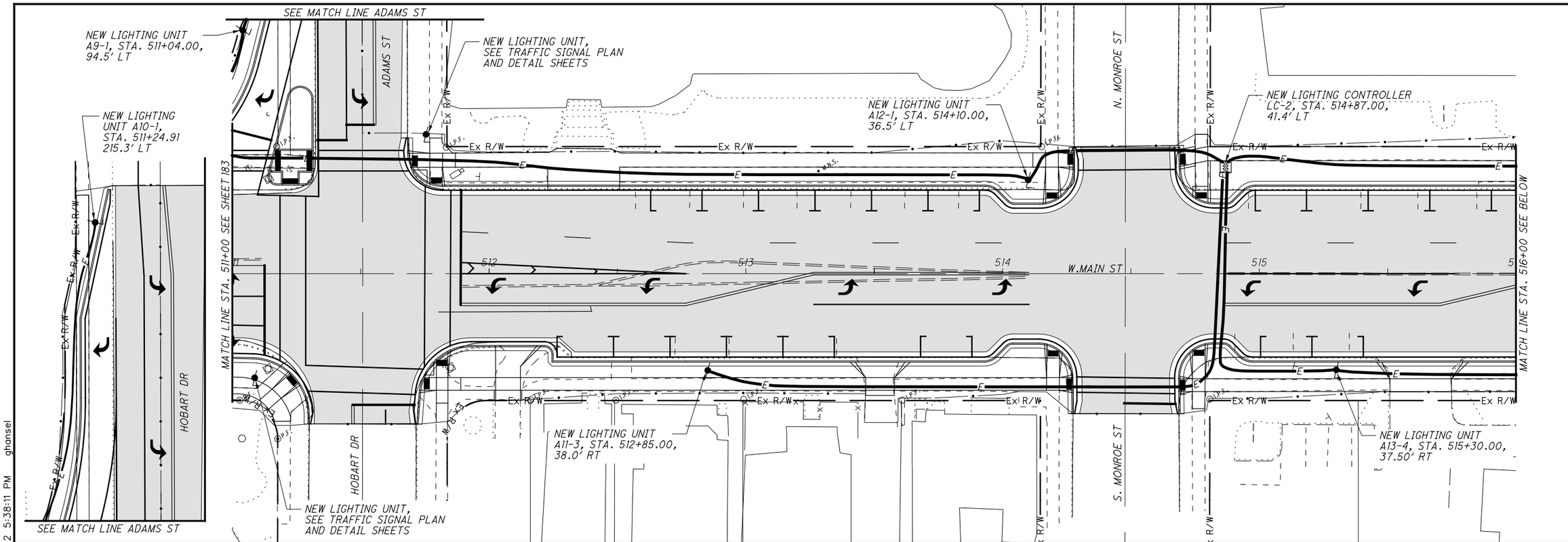

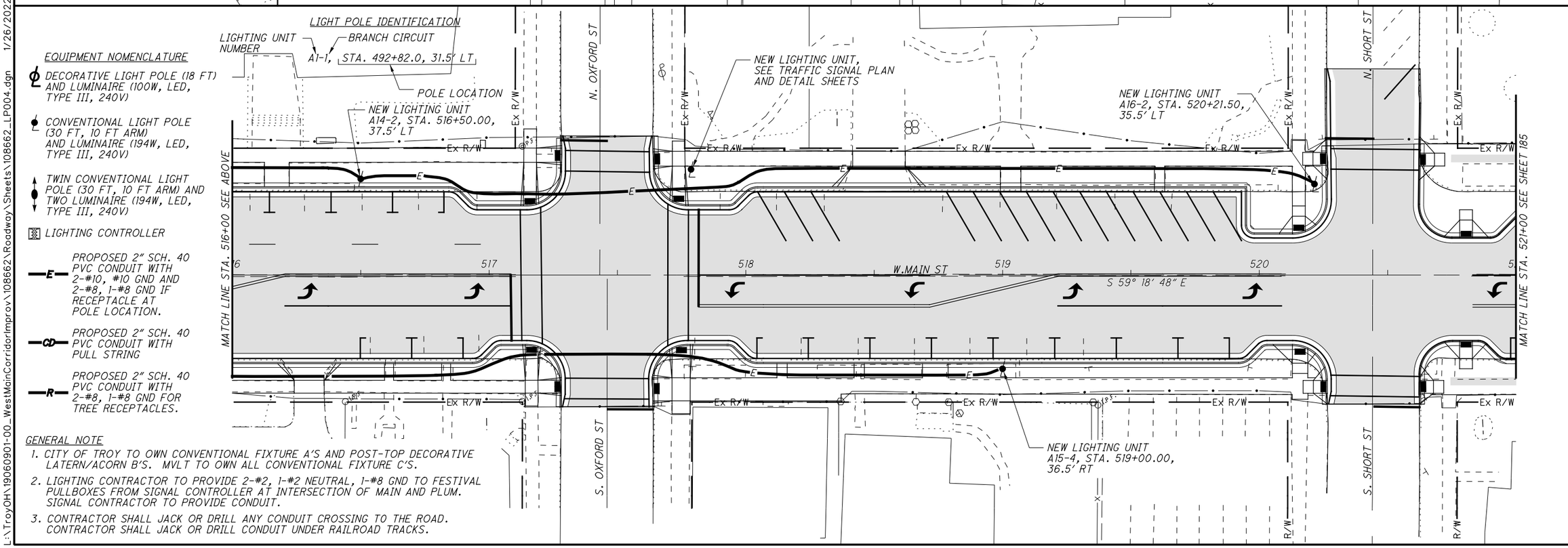

EQUIPMENT NOMENCLATURE

- DECORATIVE LIGHT POLE (18 FT) AND LUMINAIRE (100W, LED, TYPE III, 240V)
- CONVENTIONAL LIGHT POLE (30 FT, 10 FT ARM) AND LUMINAIRE (194W, LED, TYPE III, 240V)
- TWIN CONVENTIONAL LIGHT POLE (30 FT, 10 FT ARM) AND TWO LUMINAIRE (194W, LED, TYPE III, 240V)
- LIGHTING CONTROLLER
- —E— PROPOSED 2" SCH. 40 PVC CONDUIT WITH 2-#10, #10 GND AND 2-#8, 1-#8 GND IF RECEPTACLE AT POLE LOCATION.
- —CD— PROPOSED 2" SCH. 40 PVC CONDUIT WITH PULL STRING
- —R— PROPOSED 2" SCH. 40 PVC CONDUIT WITH 2-#8, 1-#8 GND FOR TREE RECEPTACLES.

GENERAL NOTE

1. CITY OF TROY TO OWN CONVENTIONAL FIXTURE A'S AND POST-TOP DECORATIVE LATERN/ACORN B'S. MVLT TO OWN ALL CONVENTIONAL FIXTURE C'S.
2. LIGHTING CONTRACTOR TO PROVIDE 2-#2, 1-#2 NEUTRAL, 1-#8 GND TO FESTIVAL PULLBOXES FROM SIGNAL CONTROLLER AT INTERSECTION OF MAIN AND PLUM. SIGNAL CONTRACTOR TO PROVIDE CONDUIT.
3. CONTRACTOR SHALL JACK OR DRILL ANY CONDUIT CROSSING TO THE ROAD. CONTRACTOR SHALL JACK OR DRILL CONDUIT UNDER RAILROAD TRACKS.

HORIZONTAL SCALE IN FEET 0 10 20 40

CALCULATED RH
CHECKED SRI

LIGHTING LAYOUT PLAN STA. 511+00 TO STA. 512+00

MIA-41-09.49

L:\TroyOH\19060901-00_WestMainCorridorImprov\108662\Roadway\Sheets\108662_LP004.dgn 1/26/2022 5:38:11 PM ghansel

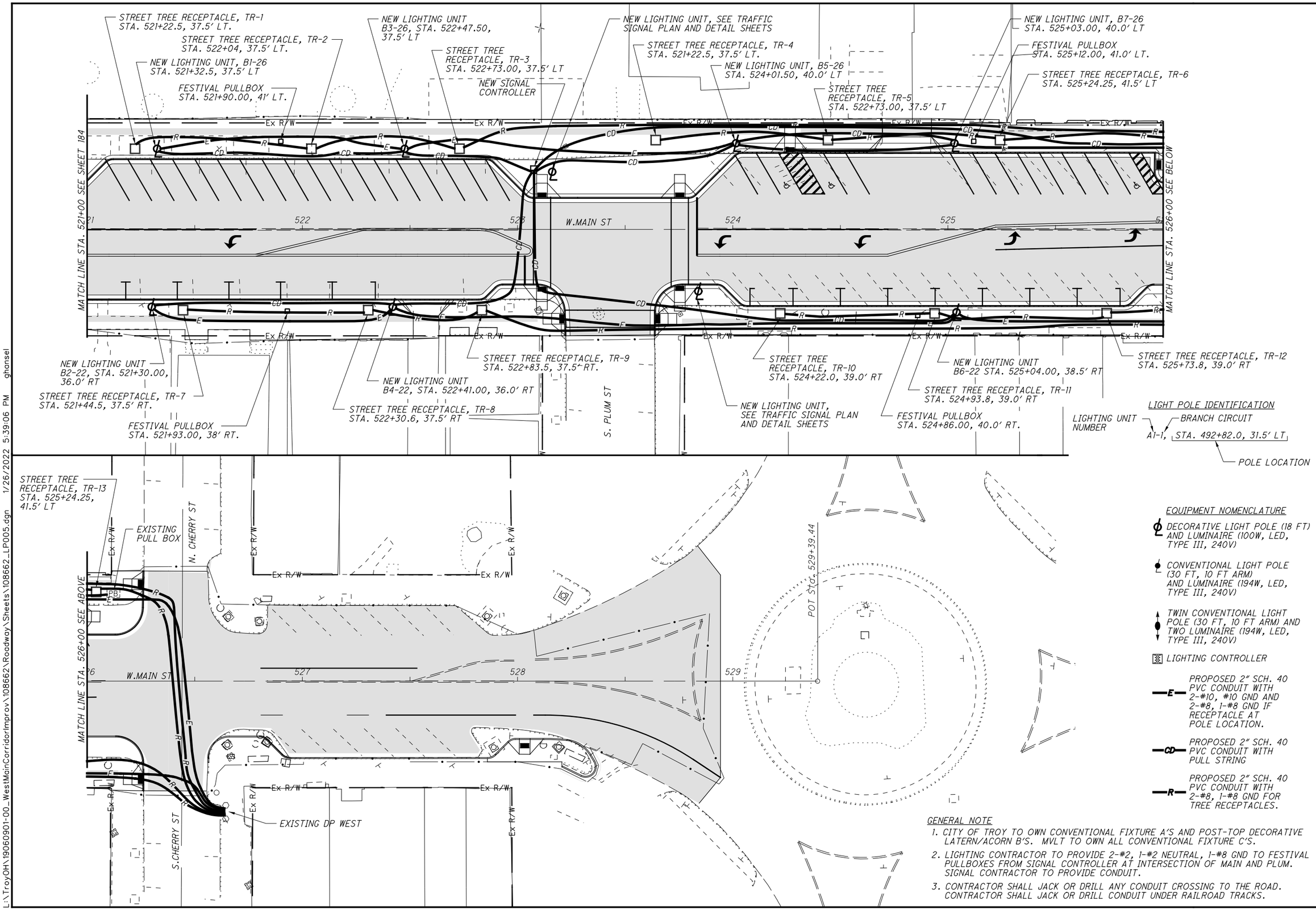

HORIZONTAL SCALE IN FEET 0 10 20 40

CALCULATED RH
CHECKED SRI

LIGHTING LAYOUT PLAN
STA. 521+00 TO STA. 529+39.44

MIA-41-09.49

L:\TroyOH\19060901-00_WestMainCorridorImprov\108662\Roadway\Sheets\108662_LP005.dgn 1/26/2022 5:39:06 PM ghansel

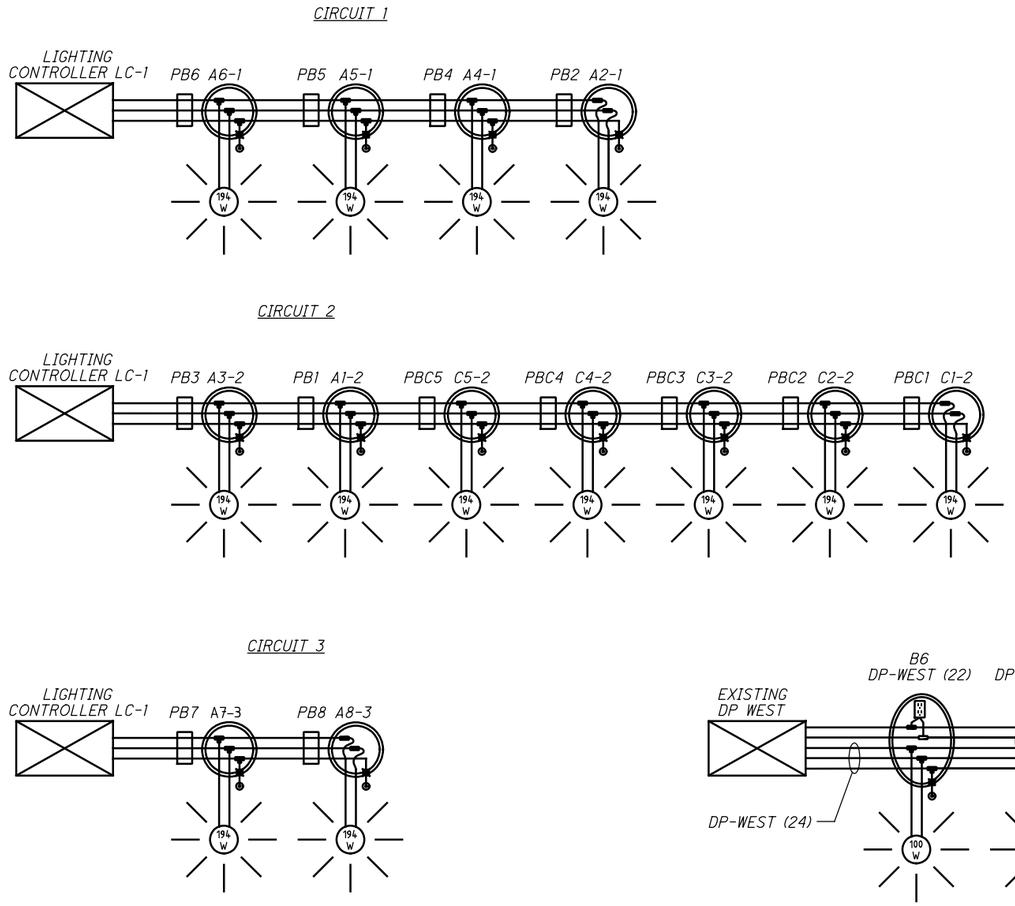

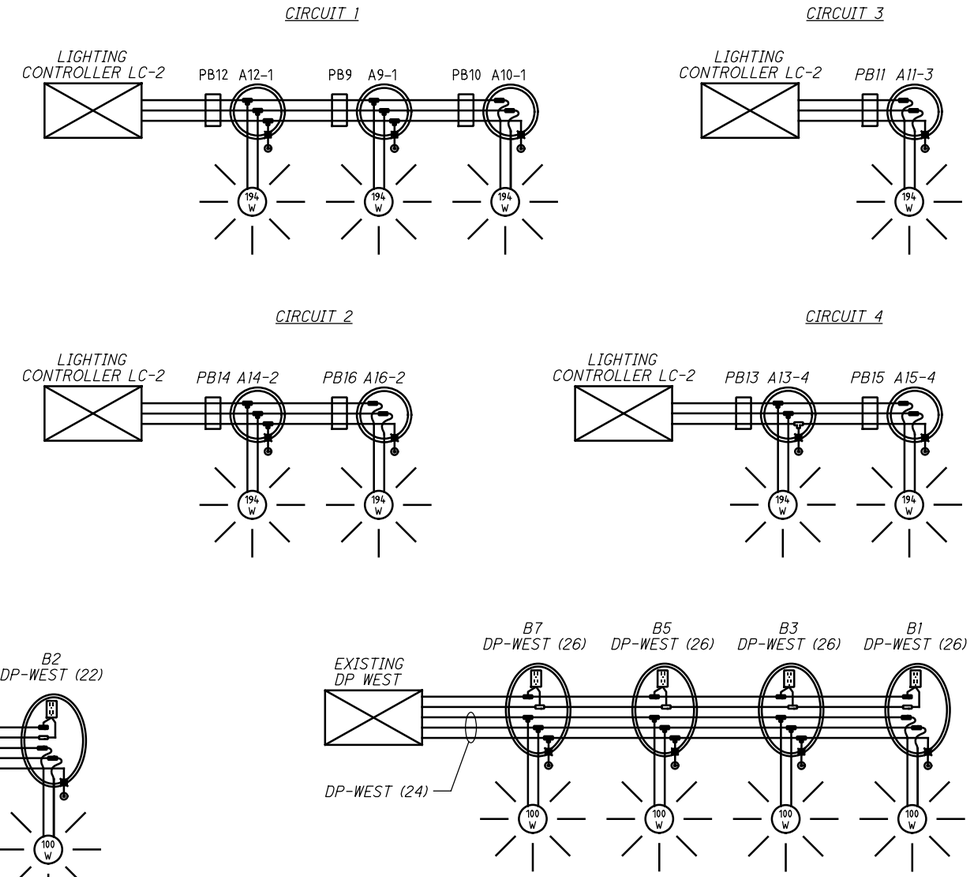

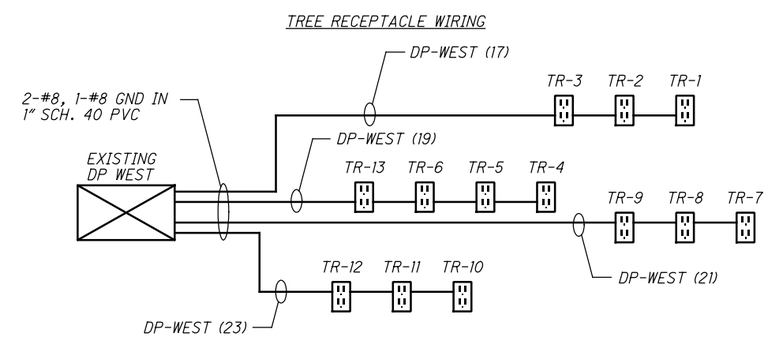

LIGHTING CONTROLLER SCHEDULE								
CONTROLLER DESIGNATION	LINE VOLTAGE (VOLTS)	CONNECTED LOAD (AMPS)	SERVICE ENTRANCE CONDUCTOR SIZE (AWG)	ENCLOSURE RATING (AMPS)	CIRCUIT NO.	CIRCUIT LOAD (AMPS)	CIRCUIT BREAKER SIZE (AMPS)	CIRCUIT WIRE SIZE (AWG)
LC-1	240	10.5	#2	100	#1	3.2	20	#10
					#2	5.7	20	#10
					#3	1.6	20	#10
LC-2	240	6.5	#2	100	#1	2.4	20	#10
					#2	1.6	20	#10
					#3	0.8	20	#10
					#4	1.6	20	#10

SYMBOL LEGEND

- POLE GROUND LUG
- GROUND ROD & SPLICE, 1" DIA x 10' LONG

CONNECTOR KITS, 725.15

- II Y TYPE W/10 AMP UL CLASS CC FUSE, 600 VOLT
- VII Y TYPE SPLICE KIT
- VI INLINE TYPE W/10 AMP UL CLASS CC FUSE, 600 VOLT
- DUPLEX GFCI RECEPTACLE WITH IN-USE COVER
- PULL BOX
- LIGHT POLE
- LIGHTING & TRAFFIC POLE
- A* LUMINAIRE
- LIGHTING CONTROLLER

NOTES

1. SEE ROADWAY LIGHTING PLANS FOR CABLE/CONDUIT INFORMATION AND STATION/OFFSET OF LIGHTING UNITS AND PULL BOXES. CIRCUITS A, B AND C ARE SHOWN FOR REFERENCE ONLY.
2. METERS WILL BE BILLED TO MVL† AND THIS IS TO BE COORDINATED DURING CONSTRUCTION.
3. RECEPTACLES SHALL BE ON SEPERATE CIRCUITS FROM THE LIGHTING.
4. RECEPTACLE CIRCUIT SHALL BE 2 - #8, 1 - #8 GND IN 2" SCH. 40 PVC CONDUIT.
5. PULL BOXES TO BE LOCATED AT POLES.
6. LIGHT FIXTURES TO INCLUDE A 10 YEAR WARRANTY.

CALCULATED RH
CHECKED SRI

LIGHTING PLAN
ONE LINE LIGHTING DIAGRAM

MIA-41-09.49

L:\TroyOH\19060901-00_WestMainCorridorImprov\108662\Roadway\Sheets\108662_LP006.dgn 1/26/2022 5:39:17 PM ghansel

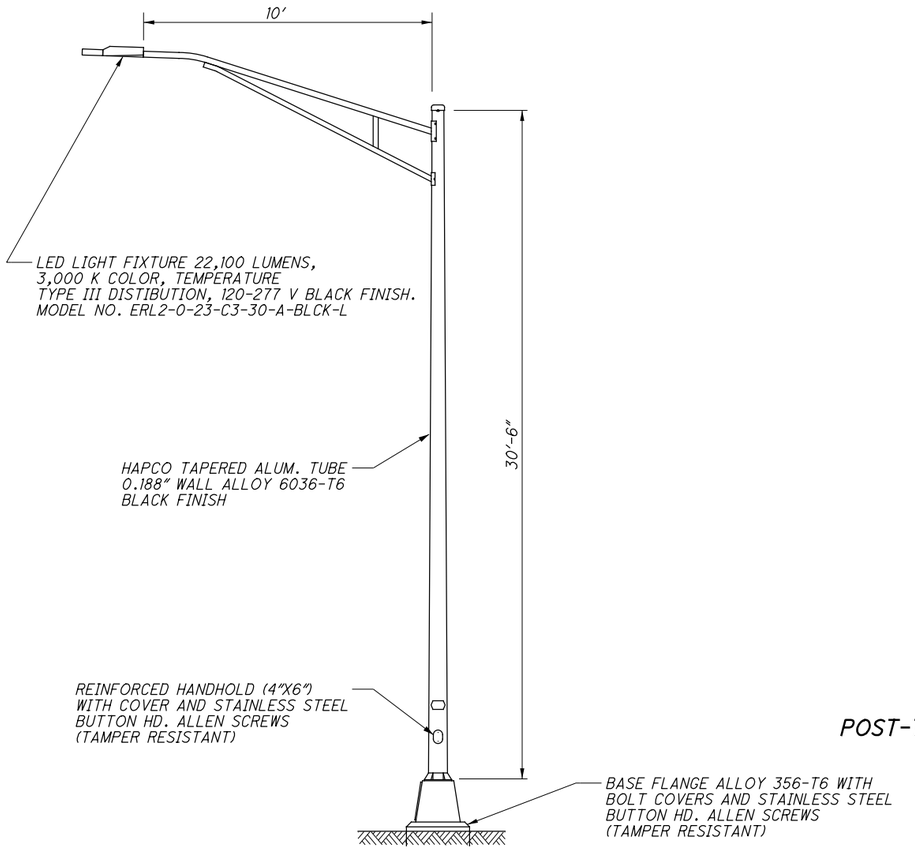

CONVENTIONAL FIXTURE "A"

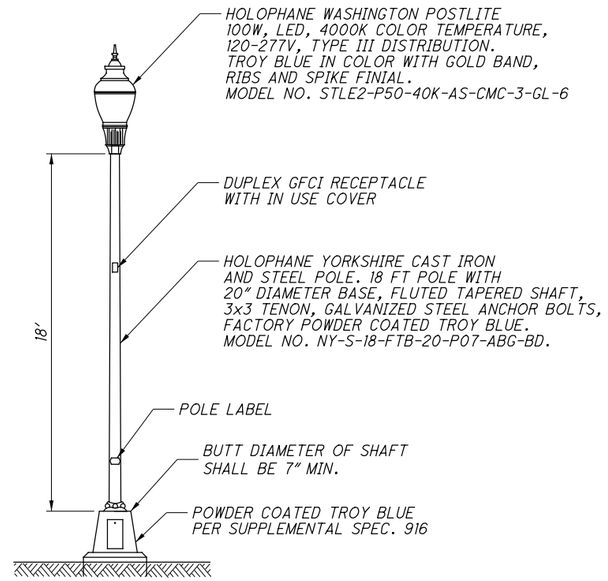

POST-TOP DECORATIVE LANTERN/ACORN "B"

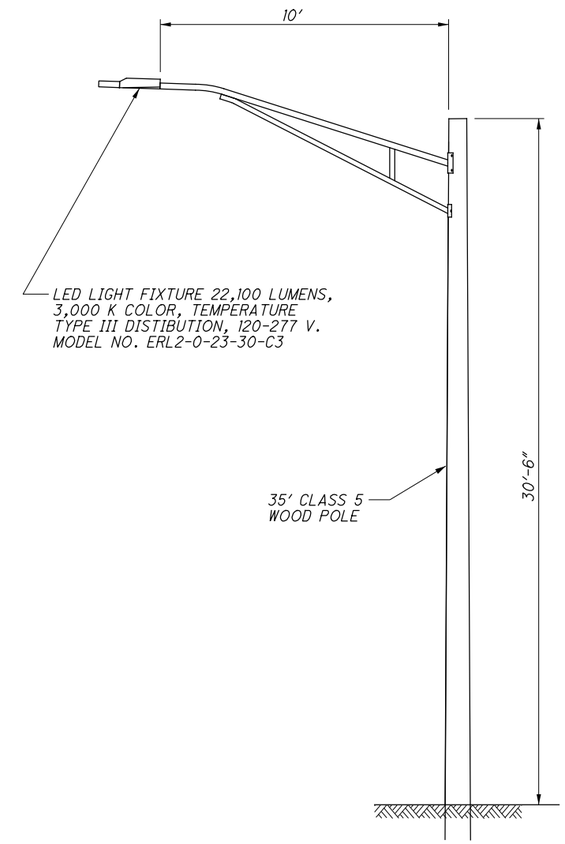

CONVENTIONAL FIXTURE "C"

ITEM 625, LIGHT POLE, DECORATIVE, AS PER PLAN
IN ADDITION TO ITEM 625 OF THE DEPARTMENT'S CONSTRUCTION AND MATERIALS SPECIFICATIONS, THE LIGHT POLES SHALL MEET THE FOLLOWING REQUIREMENTS: AN 18'-0" LUMINAIRE MOUNTING HEIGHT WITH FLUTED TAPERED SHAFTS, 20" DIAMETER BASE, 3X3 TENON, GALVANIZED STEEL ANCHOR BOLTS, FACTORY POWDER COATED IN APPROVED TROY BLUE COLOR, MODEL NO. NY-S-18-FTB-20-P07-ABG-BD.

PROVIDE A WEATHER RESISTANT RECEPTACLE WITH IN USE COVER NEAR TOP OF POLE AND PROVIDE GFCI BREAKER FOR RECEPTACLE CIRCUIT, A ONE-INCH CLAMP-ON FLAGPOLE HOLDER (MODEL NO. FPH4-XX-GN), AND ONE SET OF DOUBLE BREAK-AWAY CLAMP-ON BANNER ARMS WITH ACORN END CAPS (MODEL NO. BA-XX-C51-A-X-CMC) WITH EACH POLE.

POLES SHALL BE PAINTED TO MATCH THE EXISTING DECORATIVE LIGHT POLES AND FIXTURES. CONTRACTOR SHALL PROVIDE SAMPLES OF PAINT COLOR TO ENGINEER FOR APPROVAL.

ITEM 625, LUMINAIRE, DECORATIVE, AS PER PLAN
IN ADDITION TO THE REQUIREMENTS OF THE DEPARTMENT'S CONSTRUCTION AND MATERIAL SPECIFICATIONS, LUMINAIRES SHALL MEET THE FOLLOWING REQUIREMENTS: LUMINAIRES SHALL BE TYPE III, 100W, LED, 120-277V. THE LUMINAIRES SHALL BE HOLOPHANE WASHINGTON POSTLITE MODEL NO. STLE2-P50-40K-AS-CMC-3-GL-6. FIXTURES SHALL BE FINISHED IN THE APPROVED TROY BLUE COLOR WITH GOLD BAND, RIBS AND SPIKE FINIAL, CLOSELY MATCHING THE EXISTING DOWNTOWN FIXTURES.

ITEM 625, LIGHTING, MISC.: DUPLEX 20A NEMA 5-20R SELF TEST GFCI TYPE WITH IN-USE COVER
IN ADDITION TO ITEM 625 OF THE DEPARTMENT'S CONSTRUCTION AND MATERIALS SPECIFICATIONS, PROVIDE A WEATHERPROOF DUPLEX 20A NEMA 5-20R SELF TEST GFCI TYPE RECEPTACLE WITH IN-USE COVER AT EACH RECEPTACLE LOCATION.

ITEM 625, LIGHT POLE FOUNDATION, AS PER PLAN
IN ADDITION TO ITEM 625 OF THE DEPARTMENT'S CONSTRUCTION AND MATERIALS SPECIFICATIONS, THE LIGHT POLES FOUNDATION SHALL MEET THE FOLLOWING REQUIREMENTS: A SCREW TYPE POLE FOUNDATION, 8-5/8" OD xX 60" LONG FOUNDATION, 1" THICK X 12" SQUARE BASEPLATE, FIXED CIRCLE, MODEL NO. HUBBELL C11242NG4TL.

ITEM 625, LIGHT POLE REMOVED, AS PER PLAN
IN ADDITION TO ITEM 625 OF THE DEPARTMENT'S CONSTRUCTION AND MATERIALS SPECIFICATIONS, THE REMOVED LIGHT POLE IS TO BE DELIEVERED BY THE CONTRACTOR AND HANDED OVER TO MVLT. ADDRESS TO WHICH THE CONTRACTOR SHALL HAUL THE POLES: DPL ENERGY, 1065 WOODMAN DRIVE, DAYTON OH 45432. CONTRACTOR SHALL COORDINATE WITH MVLT FOR THE DISCONNECTION OF THE EXISTING LIGHTS.

ITEM 625, LIGHT POLE FOUNDATION REMOVED, AS PER PLAN
IN ADDITION TO ITEM 625 OF THE DEPARTMENT'S CONSTRUCTION AND MATERIALS SPECIFICATIONS, THE REMOVED LIGHT POLE FOUNDATION IS TO BE DELIEVERED BY THE CONTRACTOR AND HANDED OVER TO MVLT. CONTRACTOR SHALL COORDINATE WITH MVLT FOR THE DISCONNECTION OF THE EXISTING LIGHTS.

ITEM 625, LUMINAIRE REMOVED, AS PER PLAN
IN ADDITION TO ITEM 625 OF THE DEPARTMENT'S CONSTRUCTION AND MATERIALS SPECIFICATIONS, THE LUMINAIRE REMOVED IS TO BE DELIEVERED BY THE CONTRACTOR AND HANDED OVER TO MVLT. CONTRACTOR SHALL COORDINATE WITH MVLT FOR THE DISCONNECTION OF THE EXISTING LIGHTS.

Code No.	DESCRIPTION	UNIT	QUANTITY
625E00450	CONNECTION, FUSED PULL APART	EACH	61
625E00460	CONNECTION, UNFUSED PULL APART	EACH	7
625E10480	LIGHT POLE, DECORATIVE, AS PER PLAN	EACH	7
625E10490	LIGHT POLE, CONVENTIONAL	EACH	16
625E14501	LIGHT POLE FOUNDATION, AS PER PLAN	EACH	16
625E18000	BRACKET ARM, 10'	EACH	21
625E23100	NO. 2 AWG 600 VOLT DISTRIBUTION CABLE	FT	2295
625E23304	NO. 8 AWG 600 VOLT DISTRIBUTION CABLE	FT	5520
625E23306	NO. 10 AWG 600 VOLT DISTRIBUTION CABLE	FT	17385
625E23400	NO. 10 AWG POLE AND BRACKET CABLE	FT	2856
625E25408	CONDUIT, 2", 725.051	FT	9575
625E25900	CONDUIT, JACKED OR DRILLED, 2"	FT	750
625E26252	LUMINAIRE, CONVENTIONAL, SOLID STATE (LED), 194W, TYPE III, 240V	EACH	20
625E27550	LUMINAIRE, DECORATIVE, AS PER PLAN	EACH	9
625E29002	TRENCH, 24" DEEP	FT	9575
625E30500	PULL BOX, 725.06, SIZE 1.5	EACH	25
625E32000	GROUND ROD	EACH	21
625E34000	POWER SERVICE	EACH	2
625E75401	LIGHT POLE REMOVED, AS PER PLAN	EACH	30
625E75501	LIGHT POLE FOUNDATION REMOVED, AS PER PLAN	EACH	30
625E75507	LUMINAIRE REMOVED, AS PER PLAN	EACH	30
625E75550	DISTRIBUTION CABLE REMOVED	FT	5360
625E75800	DISCONNECT CIRCUIT	EACH	6
625E98000	LIGHTING, MISC.: DUPLEX 20A NEMA 5-20R WEATHER RESISTANT RECEPTACLE WITH IN-USE COVER	EACH	13
632E89300	WOOD POLE	EACH	5

CALCULATED DJB
CHECKED JWB

LIGHT POLE DETAILS

MIA-41-09.49

L:\TroyOH\19060901-00_WestMainCorridorImprov\108662\Roadway\Sheets\108662_LD001.dgn 1/26/2022 5:39:22 PM ghansel

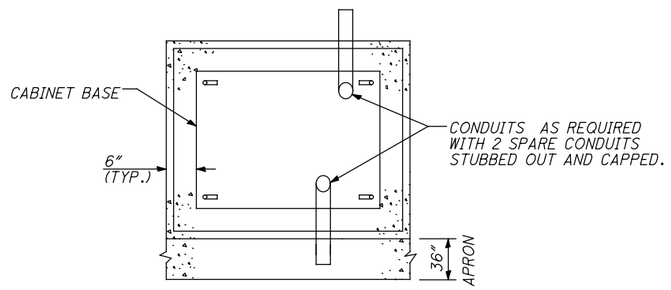

CONTROL CABINET FOUNDATION

TOP VIEW

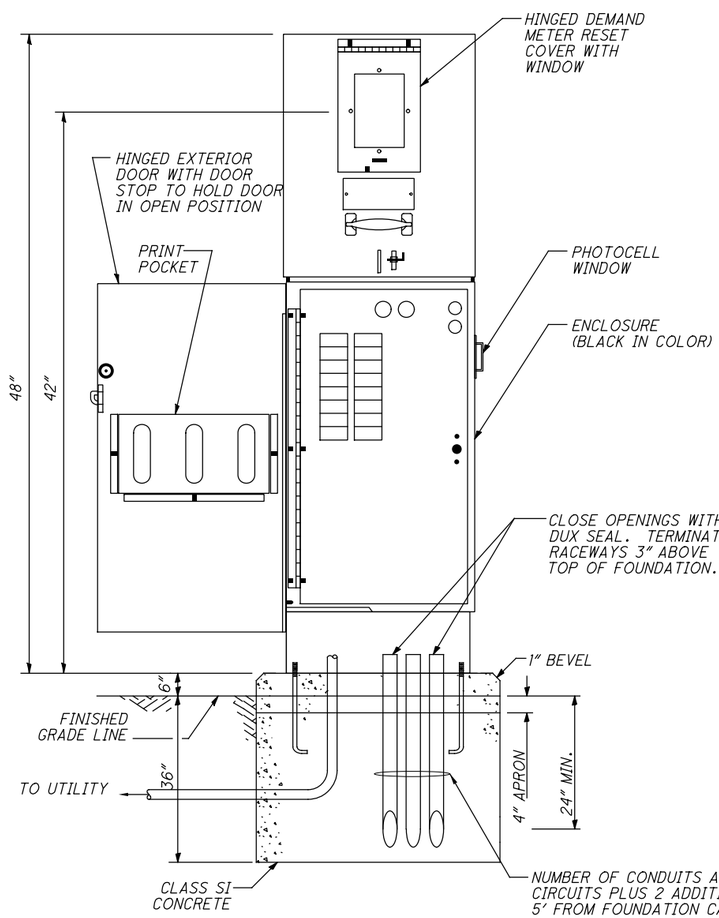

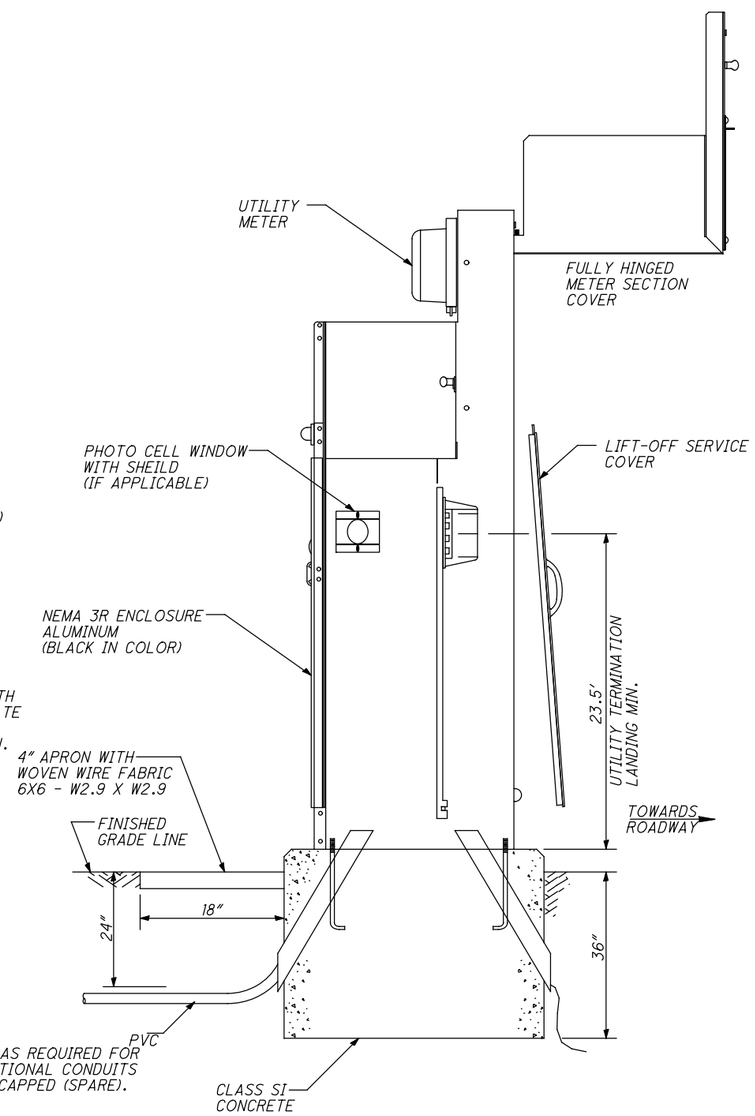

CONTROL, LIGHTING AND FOUNDATION DETAIL

N.T.S

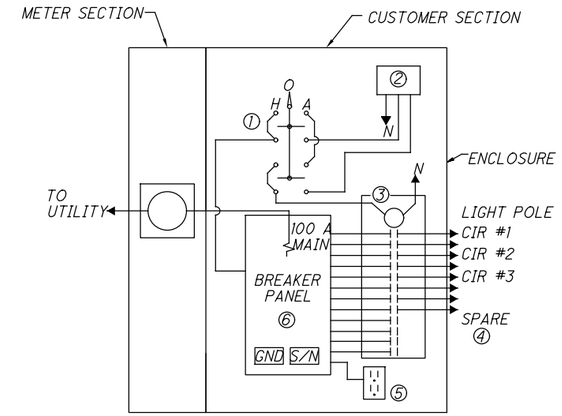

NOTES

1. H-O-A SWITCH WITH ENGRAVED NAMEPLATE AS DETAILED, MOUNTED BEHIND DOOR.
2. PHOTOCELL WITH INTEGRAL SURGE SUPPRESSOR.
3. CONTACTOR, 30A, 12P, 120V COIL, ELECTRICALLY HELD.
4. GND AND NEUTRAL CONDUCTORS NOT SHOW FOR CLARITY.
5. 20 AMP, GFCI CONVENIENCE DUPLEX RECEPTACLE.
6. 100A, 120/240V, SINGLE PHASE, 3 WIRE, 24 POLE BREAKER PANEL WITH 100A MAIN CB OR EQUIVALENT PROVIDE 12 20A, 1P CB AND 6 20A 2P CB

LC-1 CONTROLLER WIRING DIAGRAM

N.T.S

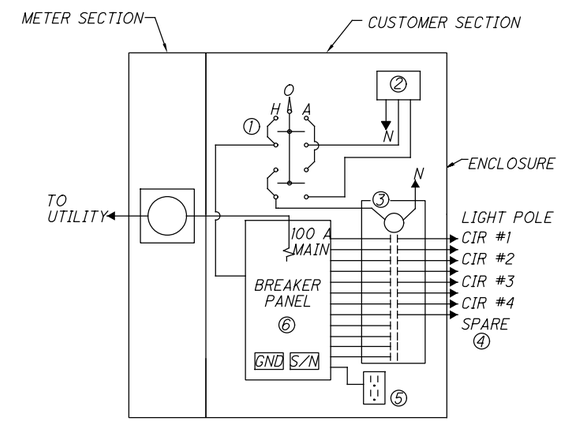

NOTES

1. H-O-A SWITCH WITH ENGRAVED NAMEPLATE AS DETAILED, MOUNTED BEHIND DOOR.
2. PHOTOCELL WITH INTEGRAL SURGE SUPPRESSOR.
3. CONTACTOR, 30A, 12P, 120V COIL, ELECTRICALLY HELD.
4. GND AND NEUTRAL CONDUCTORS NOT SHOW FOR CLARITY.
5. 20 AMP, GFCI CONVENIENCE DUPLEX RECEPTACLE.
6. 100A, 120/240V, SINGLE PHASE, 3 WIRE, 24 POLE BREAKER PANEL WITH 100A MAIN CB OR EQUIVALENT PROVIDE 12 20A, 1P CB AND 6 20A 2P CB

LC-2 CONTROLLER WIRING DIAGRAM

N.T.S

CALCULATED DJB
CHECKED JWB

LIGHT CONTROLLER DETAILS

MIA-41-09.49

L:\TroyOH\19060901-00_WestMainCorridorImprov\108662\Roadway\Sheets\108662_LD002.dgn 1/26/2022 5:39:29 PM ghansel

Tree Maintenance Policy

On May 8, 2007 the Board of Park Commissioners adopted the Arboricultural Specifications and Standards of Practice. These specifications will aide local residents and contractors in the planting, maintenance and removal of trees within the "Tree-lawn" or other public place. Copies of these specifications are also available at the office of the City Engineer.

CITY OF TROY, OHIO
ARBORICULTURAL SPECIFICATIONS AND STANDARDS OF PRACTICE
The City shall have the authority to enforce the rules and regulations of the Arboricultural Specifications and Standards of Practice, which governs the selection for planting, maintenance, protection and removal of public trees.

A. POLICY
1. The Arboricultural Specifications and Standards of Practice shall be adhered to at all times. All work performed on public trees shall be in compliance with the Tree Ordinance of the City of Troy.
3. The policy of the City shall be one of cooperation with the public.
4. No trees shall be removed from public places unless they constitute a hazard, a public nuisance, or due to revisions of the specifications and standards of practice.

B. SPECIES, CULTIVARS, OR VARIETIES
1. The Tree Board shall prepare a list of trees acceptable for planting in public places of the City.
2. Only trees of good appearance, beauty, adaptability, and trees free of injurious insects or disease shall be planted in public places.
3. The Tree Board shall review at least every two (2) years; the approved tree species, cultivars, and varieties for any revision.
4. If under the master shade tree plan street blocks have been assigned a particular tree species, or variety, only these trees shall be planted. This is subject to revision by the Tree Board.
5. The Tree Board shall consider recommendations from the City Forester in the selection of shrub species, cultivars or varieties for planting in public places.

C. PLANTING
1. Size
A. Definitions of size:
1. Small Trees are designated as those attaining a height of twenty (20) to thirty (30) feet.
2. Medium Trees are designated as those attaining a height of thirty (30) to forty-five (45) feet.
3. Large Trees are designated as those attaining a height of forty-five (45) feet or more.
B. Unless otherwise specified by the Tree Board, all deciduous tree species, cultivars and varieties, shall be at least 1.5 inches in diameter. The tree canopy shall be in good balance with the trunk. When planting, the root
ball shall be level with existing grade, or in heavy clay soils not exceeding six (6) inches above existing grade.

2. Tree Grade
All trees shall have comparatively straight trunks, well developed leaders, canopies, and roots characteristic of the species, cultivars, and exhibit evidence of proper nursery pruning. All trees must be free of insects, disease, mechanical injury, and other objectionable features at the time of planting.

3. Location and Spacing
A. Only small or medium trees shall be planted where overhead primary power lines or building setbacks are present.
B. Only small trees shall be planted in a tree-lawn less than three (3) feet in width.
C. Trees shall be planted:
(25) twenty-five feet from street intersections,
(15) fifteen feet from driveways and alleys,
(10) ten feet from a utility pole,
(6) six feet from any underground water lines, sewer lines, shut-off valves, meter pit, distribution lines or other utility.
D. Spacing of trees shall be determined according to local conditions, species, cultivars, or varieties, mature height, spread, and form. All large trees shall be planted forty (40) to sixty (60) feet on center; medium
trees shall be planted a minimum of thirty-five (35) feet on center; and small trees shall be planted a minimum of twenty-five (25) feet on center.
E. Minimum planting distance and spacing may be slightly modified at the discretion of the Tree Board and/or City Forester. All planting on unpaved streets without curbs or sidewalks, shall require permission of the City to determine the tree planting location.
F. All planting on unpaved streets without curbs or sidewalks, shall require permission of the City to determine the tree planting location.

D. GENERAL MAINTENANCE
1. Pruning And Removal
A. Topping of any tree species in the public right of way, is strictly prohibited except by written consent by the City Forester.
B. All pruning cuts shall be made with a saw or pruner and only at nodes and crotches. No stubs shall be left. No climbing spurs shall be used in trees, except when trees are to be removed.
C. All dead, crossed, and rubbing branches shall be removed.
D. All tools being used on a tree suspected of being infected with a contagious disease shall be disinfected with alcohol after each cut and between trees.
E. Stumps of all public trees shall be removed. Stumps shall be cut at a minimum of six (6) inches below the ground, soil placed and leveled. If the area where the stump is removed is to be paved, the stump shall be cut at least nine (9) inches below the ground and back filled with gravel.

2. Pruning of Young Trees
A. Pruning of only broken branches is recommended during the transplanting of a tree.
B. Pruning practices to be followed the first year following planting shall consist of removing dead, broken, or injured branches, uneven growth, and the removal of water sprouts. Excessive pruning at the
time of transplanting will add additional stress to the tree.
C. Tree canopies shall be raised as growth characteristics and location dictates. Newly planted trees need not have lower branches removed until they are well established.

3. Traffic Control
A. Whenever streets are to be blocked or limited in public service, (911), and the office of the City Engineer shall be notified forty-eight (48) hours in advance giving the location and the length of time the street will be blocked. Notification shall be given those agencies upon the removal of such barriers, or when such barriers are to remain longer than originally requested.
B. For the protection of the public while pruning or removing trees in the tree lawn or any public tree, only approved highway cones, signs, street and sidewalk barriers, shall be used in accordance with the Ohio Manual of Uniform Traffic Control Devices (OMUTCD). Contact may be made with the office of the City Engineer to confirm the proper barrier locations are adequate to ensure public safety.
Flashing signals or reflective devices shall be placed on all obstructions remaining in the street after dusk.

4. Fertilization
Fertilization of trees is not recommended until after 1 year from planting.
Fertilization by a tree/landscape contractor is encouraged.

5. Cavities
Extensive cavity work should be performed on trees only if trees are sufficiently high in value.

6. Cabling
A. Cables shall be placed approximately two thirds (2/3) of the distance between the crotch and the top branch ends. Rust resistant cables, thimbles, and lags should be used. The ends of a cable shall be attached to hooks or eyes of lags or bolts, and thimbles must be used in the end of each cable. In no instance shall a cable be wrapped around a branch.
B. All cabling and bracing practices with screw rods shall follow the Tree Care Industry Association standards for guying of shade trees.
Website: www.natlarb.com

E. APPROVED ARBORICULTURAL PRACTICES
Where mention is made to acceptable arboricultural practices, work shall conform to practices established by the Tree Care Industry Association Standards, or various tree care publications published by the Cooperative Extension Service of Ohio Sate University.

F. AMEND
The Park Board reserves the right to modify, amend, or extend Arboricultural Specifications and Standards of Practice.

RECOMMENDED TREES
The following list constitutes the approved street tree species for the City of Troy, Ohio.

Small Trees	Large Trees
Trident Maple	Autumn Flame Red Maple
Crusader Cruzam Hawthorn	Red Sunset Red Maple
Winter King Hawthorn	October Glory Red Maple
Ivory Silk Tree Lilac	Autumn Blaze Red Maple
	Green Mountain Sugar Maple
Medium Trees	Wright Brothers Sugar Maple
Crimson Sentry Norway Maple	American Yellow-wood
Emerald Queen Norway Maple	London Plane Tree
Parkway Norway Maple	Princeton Sentry Ginkgo
Armstrong Red Maple	Scarlet Oak
Bowhall Red Maples	Shingle Oak
Turkish Filbert	Northern Red Oak
Callery Pear: Aristocrat, Cleveland Select, Redspire	Shumard Oak
Redmond American Linden	Green Vase Japanese Zelkova
Chancellor Little Leaf Linden	Village Green Japanese Zelkova
Greenspire Little Leaf Linden	Bosque Lacebark Elm
	Dynasty Lacebark Elm

PROHIBITED TREES
The following list constitutes prohibited trees in the treelawn and public places for the City of Troy, Ohio.

Catalpa	Horsechestnut	Mulberry
Box Elder	Locust, Black	Poplar
Willow	Crabapple	Maple, Silver
Tree of Heaven	Tulip Tree	Chinese Elm

Troy is a member of TREE CITY USA. The goal of Tree City USA is to improve tree planting and tree care throughout America. The organization provides direction, technical assistance and public recognition for urban and community forestry programs. Tree City USA is sponsored by the National Arbor Day Foundation in cooperation with the USDA Forest Service.
ADOPTED BY: The Board of Park Commissioners
8 day of May , 2007

ITEM 661 - PLANTING, MISC.: TREE WELL

TREE WELLS SHALL BE INSTALLED WITHIN THE SIDEWALK AT THE LOCATIONS SHOWN IN THE PLANS. THE CONTRACTOR SHALL PERFORM THIS WORK IN ACCORDANCE WITH THE DRAWINGS AND THE TREE MAINTENANCE POLICY PROVIDED BY THE CITY OF TROY, SHOWN ON THIS SHEET.

THE LABOR, MATERIALS, AND EQUIPMENT FOR THE FOLLOWING ITEMS SHALL BE INCLUDED IN THE BID PRICE FOR ITEM 661 - PLANTING, MISC.: TREE WELL AND WILL NOT BE PAID FOR SEPARATELY:

-CONCRETE TREE WELL, 4'X4' SQUARE, 1'-2" HIGH, AND 4" THICK

-SHREDDED HARDWOOD MULCH, 3" THICK

-2" CALIPER TREE (CLEVELAND SELECT PAIR)

-TREE PLANTER STRUCTURAL SOIL MIX, MINIMUM 24" ON ALL SIDES OF ROOT BALL

-TREE GRATE AND FRAME, NEENAH # 66683 WITH ASPHALTIC PAINT

THE LABOR, MATERIALS, AND EQUIPMENT NECESSARY TO PERFORM THE WORK INCLUDED IN THIS NOTE SHALL BE PAID FOR AS PLANTING MISC.; TREE WELL PER EACH TREE WELL LOCATION.

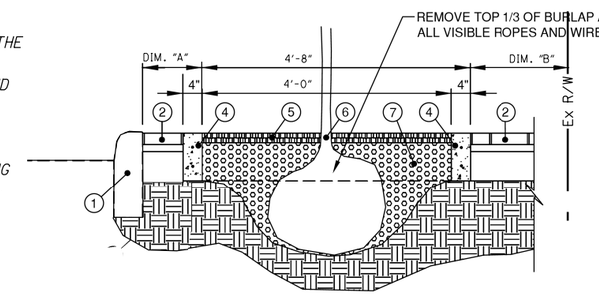

LEGEND

1. PROPOSED CURB
2. PROPOSED 5" WALK
3. NOT USED
4. CONCRETE TREE WELL, SQUARE (4'-8" X 4'-8" OUTSIDE, 4' X 4' INSIDE, 10" TALL, 4" THICK, CLASS C CONCRETE). REINFORCED WITH TWO (2) #4 REBAR PLACED 4" APART. BEND BAR AROUND ALL FOUR CORNERS.
5. SHREDDED HARDWOOD MULCH, 2" THICK
6. LANDSCAPING TREE
7. TREE PLANTER STRUCTURAL SOIL MIX (12" MINIMUM ON SIDES OF ROOT BALL)

ITEM 661 - PLANTING, MISC.: LANDSCAPING TREE

TREES SHALL BE INSTALLED WITHIN THE TREE LAWNS AND TREE WELLS AT THE LOCATIONS SHOWN IN THE PLANS. THE LOCATION OF THE LANDSCAPE TREES SHOWN IS APPROXIMATE, AND THE CONTRACTOR SHALL VERIFY THE LOCATIONS OF THE LANDSCAPE TREES WITH THE ENGINEER BEFORE PERFORMING WORK. THE CONTRACTOR SHALL PERFORM THIS WORK IN ACCORDANCE WITH THE DRAWINGS AND THE TREE MAINTENANCE POLICY PROVIDED BY THE CITY OF TROY, SHOWN ON THIS SHEET.

START STA.	END STA.	SIDE	DIM. "A"	DIM. "B"
521+00	523+50	LT	2'	9.5'
521+00	523+50	RT	2'	9.5'
523+50	528+00	LT	3'	5.5'
523+50	528+00	RT	6"	8'

ALL LANDSCAPING TREES SHALL BE PRINCETON SENTRY GINKGO.

THE LABOR, MATERIALS, AND EQUIPMENT NECESSARY TO PERFORM THE WORK INCLUDED IN THIS NOTE SHALL BE PAID FOR AS PLANTING MISC.; LANDSCAPING TREE PER EACH.

STA.	OFF	LT/RT	LANDSCAPING TREE	TREE WELL
521+56	37.50	RT	1	
513+16	37.50	RT	1	
513+95	37.50	RT	1	
513+70	37.50	LT	1	
515+11	37.75	RT	1	
516+09	37.75	RT	1	
516+82	39.25	LT	1	
516+99	37.75	RT	1	
521+00	37.50	LT	1	1
521+45	37.50	RT	1	1
522+04	37.50	LT	1	1
522+31	37.50	RT	1	1
522+73	37.50	LT	1	1
523+64	41.50	LT	1	1
524+22	39.00	RT	1	1
524+44	41.50	LT	1	1
524+94	39.00	RT	1	1
525+24	41.50	LT	1	1
525+74	39.00	RT	1	1
526+04	41.50	LT	1	1
TOTALS CARRIED TO GENERAL SUMMARY:			21	13

CALCULATED ATW
CHECKED JDH

LANDSCAPING NOTES AND DETAILS

MIA-41-09.49

S:\CIN\4300--4399\4354\004\Drawings\CAD\108662\roadway\sheets\08662GN003.dgn Sheet 2/2/2022 11:41:25 AM Allisonw

RIGHT OF WAY LEGEND SHEET

MIA-41-9.49

MIAMI COUNTY

CONCORD TOWNSHIP

CITY OF TROY

SEC. 21 & 28, T. 5 N., R. 6 E.

CONGRESS LANDS WEST OF THE MIAMI RIVER

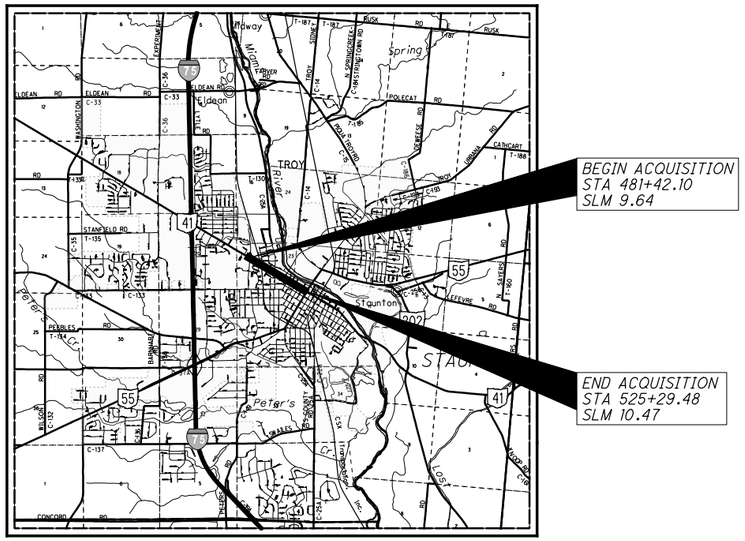

LOCATION MAP

LATITUDE: 40°02'45" LONGITUDE: 84°13'03"

UTILITY OWNERS		
TYPE	NAME & ADDRESS	
ELECTRIC:	THE DAYTON POWER AND LIGHT COMPANY 1065 WOODMAN DRIVE DAYTON, OH 45432 PHONE: (937) 331-4521	
FIBER OPTIC:	CENTURY LINK 1025 ELDORADO BLVD BROOMFIELD, CO 80021 PHONE: (720) 888-1089	
GAS:	VECTREN 1335 E DAYTON YELLOW SPRING ROAD FAIRBORN, OH 45324 PHONE: (800) 339-6594	
TELECOM:	CHARTER COMMUNICATIONS 3691 TURNER ROAD DAYTON, OH 45415 PHONE: (937) 396-8372	FRONTIER COMMUNICATIONS 2444 ST RT 55 TROY, OH 45373 PHONE: (937) 335-2624
TELEPHONE:	AT&T 7201 FAR HILLS AVENUE DAYTON, OH 45459 PHONE: (937) 296-3588	
WATER:	CITY OF TROY 100 S MARKET ST TROY, OH 45373 PHONE: (937) 335-4151	

NOTES: THE LOCATION OF THE UNDERGROUND UTILITIES SHOWN ON THE PLANS ARE OBTAINED FROM THE OWNER OF THE UTILITIES AS REQUIRED BY SECTION 153.64 O.R.C.

CONVENTIONAL SYMBOLS

Township Line
Section Line
Center Line
Right of Way (Ex) — Ex R/W
Right of Way (Pr) — R/W
Standard Highway Ease.(Ex) — Ex SH
Standard Highway Ease.(Pr) — SH
Temporary Right of Way — TMP
Railroad
Construction Limits
Edge of Pavement (Ex)
Edge of Pavement (Pr)

Ownership Hook Symbol, Example
Property Line Symbol, Example
Tree (Pr), Tree (Ex), Shrub (Ex)
Tree (Remove), Shrub (Remove)
Evergreen (Ex), Stump
Evergreen (Remove), Stump (Remove)
Post (Ex), Mailbox (Ex), Mailbox (Pr)
Light (Ex), Telephone Marker (Ex)
Fire Hydrant (Ex), Water Meter (Ex)
Water Valve (Ex), Utility Valve Unknown (Ex.)
Telephone Pole (Ex), Power Pole (Ex)
Light Pole (Ex)

INDEX OF SHEETS:

LEGEND SHEET	1
CENTERLINE PLAT	2-4
PROPERTY MAP	5, 6
SUMMARY OF ADDITIONAL R/W	7-12B
R/W TOPOGRAPHIC SHEETS	12C, 13, 15, 17, 19, 21, 23, 25, 27, 29, 31
R/W BOUNDARY SHEETS	12D, 14, 16, 18, 20, 22, 24, 26, 28, 30, 32

PROJECT DESCRIPTION

WIDENING OF SR 41 (W. MAIN ST.) TO INCLUDE AT LEAST ONE 12' THROUGH LANE IN EACH DIRECTION, RECONSTRUCTING THE SIDEWALK AND CURB LAWN ALONG THE CORRIDOR, UPSIZING A WATER MAIN ALONG A PORTION OF WEST MAIN STREET AND IMPROVING THE STORMWATER SYSTEM ALONG THE CORRIDOR FOR A LENGTH OF 0.88 MILES.

PLANS PREPARED BY:

FIRM NAME: SURVEYING AND MAPPING, LLC
R/W DESIGNER: BRIAN J. OYER
R/W REVIEWER: JEFFREY C. SPONTAK
FIELD REVIEWER: BRIAN J. OYER
PRELIMINARY FIELD REVIEW DATE: 6-26-2019
TRACINGS FIELD REVIEW DATE: 3-20-2020
OWNERSHIP UPDATED BY: BRIAN J. OYER
DATE COMPLETED: 3-24-2020
PLAN COMPLETION DATE: 3-30-2020

STRUCTURE KEY

RESIDENTIAL
COMMERCIAL
OUT-BUILDING

TYPES OF TITLE LEGEND:
WL = FEE SIMPLE WITH LIMITATION OF ACCESS
WD = WARRANTY DEED
PRW = PROPERTY RIGHT FEE SIMPLE
SH = STANDARD HIGHWAY EASEMENT
LA = LIMITED ACCESS EASEMENT
T = TEMPORARY EASEMENT
CH = CHANNEL EASEMENT
A = AERIAL EASEMENT
SL = SLOPE EASEMENT
PRE = PROPERTY RIGHT EASEMENT

I, JEFFREY C. SPONTAK, P. S. have conducted a survey of the existing conditions for the Ohio Department of Transportation on JAN., FEB. & MAR 2019. The results of that survey are contained herein. The horizontal coordinates expressed herein are based on the Ohio State Plane Coordinates System SOUTH Zone on NAD 83 2011 datum. The Project Coordinates (US Survey Feet) are relative to State Plane Grid Coordinates (Meters or US Survey Feet) by a Project Adjustment Factor of 0.99996789. As a part of this project I have reestablished the locations of the existing property lines and the existing centerline of Right of Way for property takes contained herein. As a part of this project I have established the proposed property lines, calculated the Gross Take, present roadway occupied (PRO), Net Take and Net Residue; as well as prepared the legal descriptions necessary to acquire the parcels as shown herein. As a part of this work I have set right of way monuments at the property corners, property line intersection, points along the right of way and/or angle points on the right of way, Section Corners and other points as shown herein. All of my work contained herein was conducted in accordance with Ohio Administrative Code 4733-37 commonly known as "Minimum Standards for Boundary Surveys in the State of Ohio" unless noted. The words I and my as used herein are to mean either myself or someone working under my direct supervision.

JEFFREY C. SPONTAK, Professional Land Surveyor 7856

Date: _____

SURVEYORS SEAL

FEDERAL PROJECT NO. E190578

PID NO. 108662

CALCULATED BJO CHECKED JCS

RIGHT OF WAY LEGEND SHEET

MIA-41-9.49

S:\CIN\4300-4399\4354\004\Drawings\CAD\108662\row\sheets\08662RL001.dgn Sheet 12/1/2021 5:04:41 PM CarlR

MIAMI COUNTY
CONCORD TOWNSHIP
CITY OF TROY
SEC. 21 & 28, T. 5 N., R. 6 E.
CONGRESS LANDS WEST OF THE MIAMI RIVER

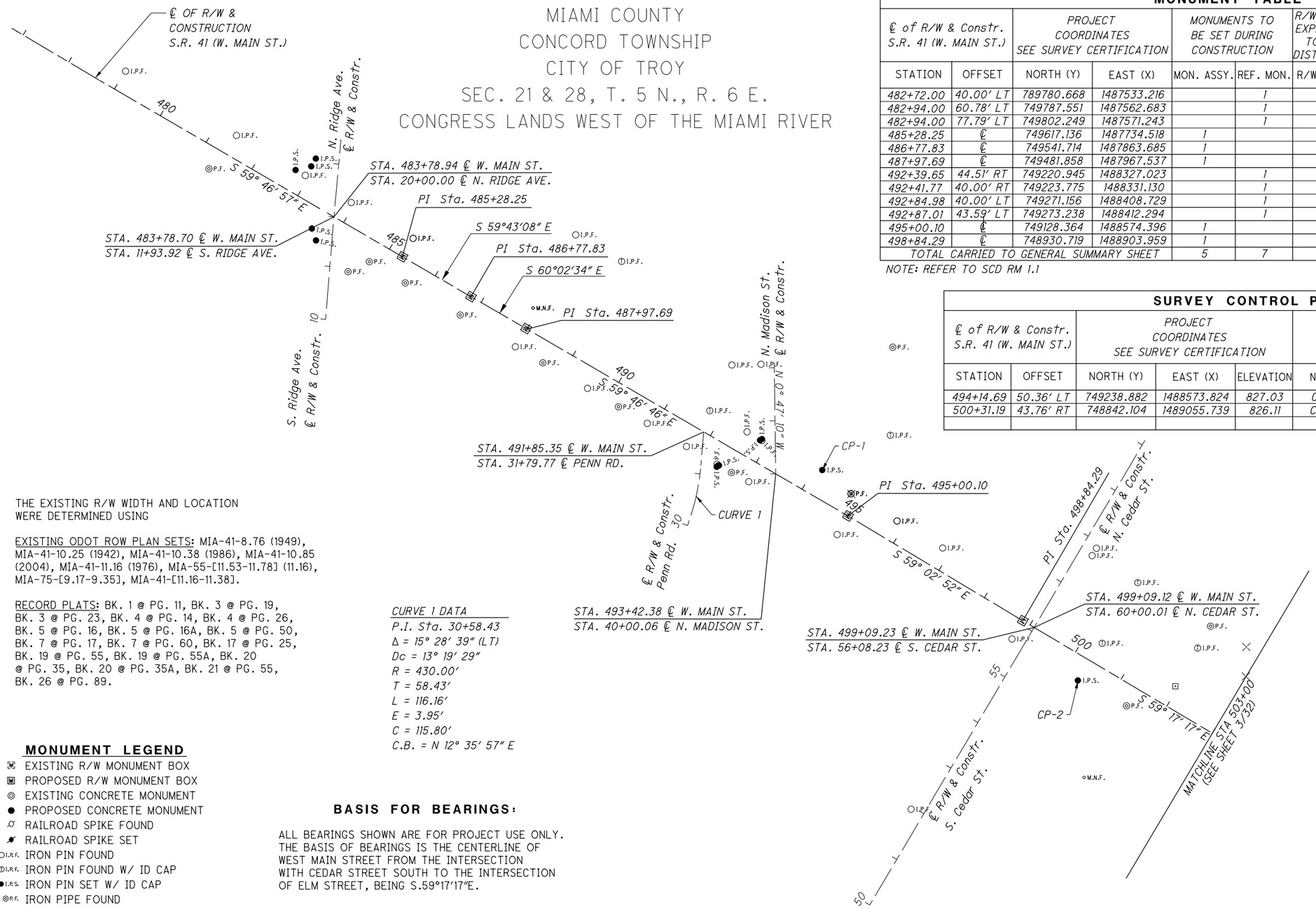

MONUMENT TABLE

℄ of R/W & Constr. S.R. 41 (W. MAIN ST.)		PROJECT COORDINATES SEE SURVEY CERTIFICATION		MONUMENTS TO BE SET DURING CONSTRUCTION		R/W MON. EXPECTED TO BE DISTURBED	
STATION	OFFSET	NORTH (Y)	EAST (X)	MON. ASSY.	REF. MON.	R/W MON.	DESCRIPTION
482+72.00	40.00′ LT	789780.668	1487533.216		1	1	IRON PIN SET
482+94.00	60.78′ LT	749787.551	1487562.683		1	1	IRON PIN SET
482+94.00	77.79′ LT	749802.249	1487571.243		1	1	IRON PIN SET
485+28.25	℄	749617.136	1487734.518	1			MONUMENT ASSEMBLY
486+77.83	℄	749541.714	1487863.685	1			MONUMENT ASSEMBLY
487+97.69	℄	749481.858	1487967.537	1			MONUMENT ASSEMBLY
492+39.65	44.51′ RT	749220.945	1488327.023		1	1	IRON PIN SET
492+41.77	40.00′ RT	749223.775	1488331.130		1	1	IRON PIN SET
492+84.98	40.00′ LT	749271.156	1488408.729		1	1	IRON PIN SET
492+87.01	43.59′ LT	749273.238	1488412.294		1	1	IRON PIN SET
495+00.10	℄	749128.364	1488574.396	1			MONUMENT ASSEMBLY
498+84.29	℄	748930.719	1488903.959	1			MONUMENT ASSEMBLY
TOTAL CARRIED TO GENERAL SUMMARY SHEET				5	7	7	

NOTE: REFER TO SCD RM 1.1

SURVEY CONTROL POINTS

℄ of R/W & Constr. S.R. 41 (W. MAIN ST.)		PROJECT COORDINATES SEE SURVEY CERTIFICATION				
STATION	OFFSET	NORTH (Y)	EAST (X)	ELEVATION	NAME	DESCRIPTION
494+14.69	50.36′ LT	749238.882	1488573.824	827.03	CP-1	REBAR WITH CAP
500+31.19	43.76′ RT	748842.104	1489055.739	826.11	CP-2	REBAR WITH CAP

NOTE: THE EXISTING R/W WIDTH AND LOCATION WERE DETERMINED USING

EXISTING ODOT ROW PLAN SETS: MIA-41-8.76 (1949), MIA-41-10.25 (1942), MIA-41-10.38 (1986), MIA-41-10.85 (2004), MIA-41-11.16 (1976), MIA-55-[11.53-11.78] (11.16), MIA-75-[9.17-9.35], MIA-41-[11.16-11.38].

RECORD PLATS: BK. 1 @ PG. 11, BK. 3 @ PG. 19, BK. 3 @ PG. 23, BK. 4 @ PG. 14, BK. 4 @ PG. 26, BK. 5 @ PG. 16, BK. 5 @ PG. 16A, BK. 5 @ PG. 50, BK. 7 @ PG. 17, BK. 7 @ PG. 60, BK. 17 @ PG. 25, BK. 19 @ PG. 55, BK. 19 @ PG. 55A, BK. 20 @ PG. 35, BK. 20 @ PG. 35A, BK. 21 @ PG. 55, BK. 26 @ PG. 89.

CURVE 1 DATA
P.I. Sta. 30+58.43
Δ = 15° 28′ 39″ (LT)
Dc = 13° 19′ 29″
R = 430.00′
T = 58.43′
L = 116.16′
E = 3.95′
C = 115.80′
C.B. = N 12° 35′ 57″ E

MONUMENT LEGEND

- EXISTING R/W MONUMENT BOX
- PROPOSED R/W MONUMENT BOX
- EXISTING CONCRETE MONUMENT
- PROPOSED CONCRETE MONUMENT
- RAILROAD SPIKE FOUND
- RAILROAD SPIKE SET
- I.P.F. IRON PIN FOUND
- I.P.F. IRON PIN FOUND W/ ID CAP
- I.P.S. IRON PIN SET W/ ID CAP
- P.F. IRON PIPE FOUND
- P.S. IRON PIPE SET
- P.K.F. P.K. NAIL FOUND
- P.K.S. P.K. NAIL SET

BASIS FOR BEARINGS:

ALL BEARINGS SHOWN ARE FOR PROJECT USE ONLY. THE BASIS OF BEARINGS IS THE CENTERLINE OF WEST MAIN STREET FROM THE INTERSECTION WITH CEDAR STREET SOUTH TO THE INTERSECTION OF ELM STREET, BEING S.59°17′17″E.

I, JEFFREY C. SPONTAK, P. S. have conducted a survey of the existing conditions for the Ohio Department of Transportation on JAN., FEB. & MAR. 2019. The results of that survey are contained herein. The horizontal coordinates expressed herein are based on the Ohio State Plane Coordinates System SOUTH Zone on NAD 83 2011 datum. The Project Coordinates (US Survey Feet) are relative to State Plane Grid Coordinates (Meters or US Survey Feet) by a Project Adjustment Factor of 0.99996789. As a part of this project I have reestablished the locations of the existing property lines and the existing centerline of Right of Way for property takes contained herein. As a part of this project I have established the proposed property lines, calculated the Gross Take, present roadway occupied (PRO), Net Take and Net Residue; as well as prepared the legal descriptions necessary to acquire the parcels as shown herein. As a part of this work I have set right of way monuments at the property corners, property line intersection, points along the right of way and/or angle points on the right of way, Section Corners and other points as shown herein. All of my work contained herein was conducted in accordance with Ohio Administrative Code 4733-37 commonly known as "Minimum Standards for Boundary Surveys in the State of Ohio" unless noted. The words I and my as used herein are to mean either myself or someone working under my direct supervision.

JEFFREY C. SPONTAK, Professional Land Surveyor 7856

Date: _____

SETTING OF ALL MONUMENTS SHALL BE PERFORMED BY A SURVEYOR REGISTERED IN THE STATE OF OHIO. THE MONUMENT ASSEMBLIES AND REFERENCE MONUMENTS WILL BE INSTALLED BY THE CONTRACTOR AT THE TIME OF CONSTRUCTION. THE IRON PIN AND CAP (WHEN REQUIRED) ARE TO BE INSTALLED BY THE CONTRACTOR'S SURVEYOR.

CHANGES OR ALTERATIONS TO THE LOCATION OF ANY MONUMENTS SHOWN IN THIS TABLE, REQUIRE PRIOR APPROVAL FROM THE DISTRICT REAL ESTATE ADMINISTRATOR OF THE OHIO DEPARTMENT OF TRANSPORTATION. IN THE EVENT THAT CHANGES OR ALTERATIONS ARE APPROVED, A REVISED CENTERLINE PLAT WITH THE NEW LOCATIONS SHALL BE RECORDED IN THE APPLICABLE COUNTY RECORDS AND THE OHIO DEPARTMENT OF TRANSPORTATION. SPECIFICATIONS FOR MONUMENT ASSEMBLIES, REFERENCE MONUMENTS AND RIGHT OF WAY MONUMENTS ARE SHOWN ON STANDARD CONSTRUCTION DRAWING RM-1.1.

RECEIVED _____, 20___
RECORDED _____, 20___
BOOK _____ PAGE _____
COUNTY RECORDER

HORIZONTAL SCALE IN FEET 0 50 100 200

PID NO. 108662

R/W DESIGNER BJO
R/W REVIEWER JCS

CENTERLINE PLAT

MIA-41-09.49

S:\CIN\4300--4399\4354\004\Drawings\CAD\108662\row\sheets\08662RC001.dgn 12/1/2021 5:04:43 PM CarlR

MIAMI COUNTY
CONCORD TOWNSHIP
CITY OF TROY
SEC. 21 & 28, T. 5 N., R. 6 E.
CONGRESS LANDS WEST OF THE MIAMI RIVER

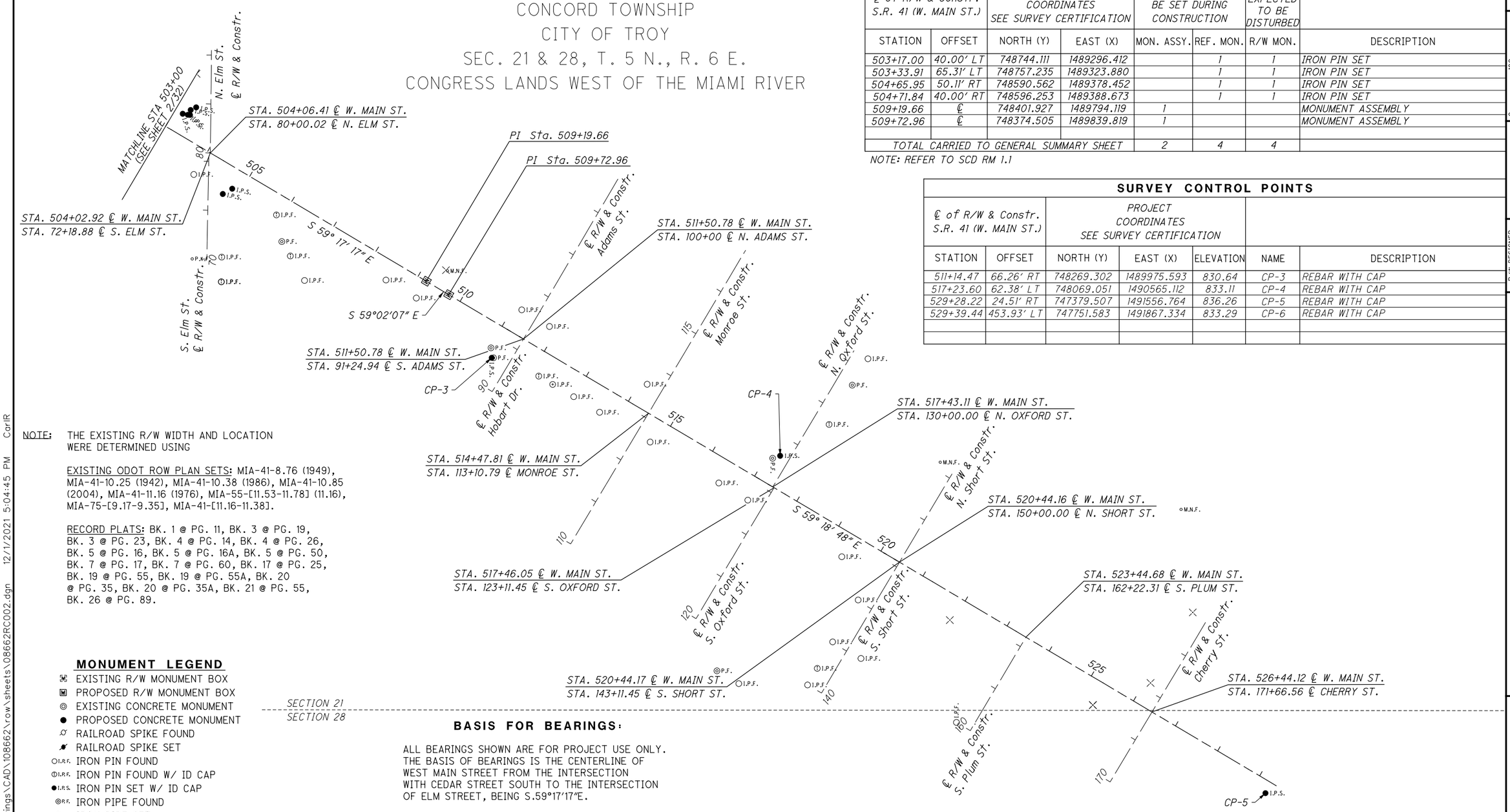

NOTE: THE EXISTING R/W WIDTH AND LOCATION WERE DETERMINED USING

EXISTING ODOT ROW PLAN SETS: MIA-41-8.76 (1949), MIA-41-10.25 (1942), MIA-41-10.38 (1986), MIA-41-10.85 (2004), MIA-41-11.16 (1976), MIA-55-[11.53-11.78] (11.16), MIA-75-[9.17-9.35], MIA-41-[11.16-11.38].

RECORD PLATS: BK. 1 @ PG. 11, BK. 3 @ PG. 19, BK. 3 @ PG. 23, BK. 4 @ PG. 14, BK. 4 @ PG. 26, BK. 5 @ PG. 16, BK. 5 @ PG. 16A, BK. 5 @ PG. 50, BK. 7 @ PG. 17, BK. 7 @ PG. 60, BK. 17 @ PG. 25, BK. 19 @ PG. 55, BK. 19 @ PG. 55A, BK. 20 @ PG. 35, BK. 20 @ PG. 35A, BK. 21 @ PG. 55, BK. 26 @ PG. 89.

MONUMENT LEGEND

- EXISTING R/W MONUMENT BOX
- PROPOSED R/W MONUMENT BOX
- EXISTING CONCRETE MONUMENT
- PROPOSED CONCRETE MONUMENT
- RAILROAD SPIKE FOUND
- RAILROAD SPIKE SET
- I.R.F. IRON PIN FOUND
- I.R.F. IRON PIN FOUND W/ ID CAP
- I.R.S. IRON PIN SET W/ ID CAP
- P.F. IRON PIPE FOUND
- P.S. IRON PIPE SET
- P.K.F. P.K. NAIL FOUND
- P.K.S. P.K. NAIL SET

BASIS FOR BEARINGS:

ALL BEARINGS SHOWN ARE FOR PROJECT USE ONLY. THE BASIS OF BEARINGS IS THE CENTERLINE OF WEST MAIN STREET FROM THE INTERSECTION WITH CEDAR STREET SOUTH TO THE INTERSECTION OF ELM STREET, BEING S.59°17'17"E.

MONUMENT TABLE

℄ of R/W & Constr. S.R. 41 (W. MAIN ST.)		PROJECT COORDINATES SEE SURVEY CERTIFICATION		MONUMENTS TO BE SET DURING CONSTRUCTION		R/W MON. EXPECTED TO BE DISTURBED	
STATION	OFFSET	NORTH (Y)	EAST (X)	MON. ASSY.	REF. MON.	R/W MON.	DESCRIPTION
503+17.00	40.00' LT	748744.111	1489296.412		1	1	IRON PIN SET
503+33.91	65.31' LT	748757.235	1489323.880		1	1	IRON PIN SET
504+65.95	50.11' RT	748590.562	1489378.452		1	1	IRON PIN SET
504+71.84	40.00' RT	748596.253	1489388.673		1	1	IRON PIN SET
509+19.66	℄	748401.927	1489794.119	1			MONUMENT ASSEMBLY
509+72.96	℄	748374.505	1489839.819	1			MONUMENT ASSEMBLY
TOTAL CARRIED TO GENERAL SUMMARY SHEET				2	4	4	

NOTE: REFER TO SCD RM 1.1

SURVEY CONTROL POINTS

℄ of R/W & Constr. S.R. 41 (W. MAIN ST.)		PROJECT COORDINATES SEE SURVEY CERTIFICATION				
STATION	OFFSET	NORTH (Y)	EAST (X)	ELEVATION	NAME	DESCRIPTION
511+14.47	66.26' RT	748269.302	1489975.593	830.64	CP-3	REBAR WITH CAP
517+23.60	62.38' LT	748069.051	1490565.112	833.11	CP-4	REBAR WITH CAP
529+28.22	24.51' RT	747379.507	1491556.764	836.26	CP-5	REBAR WITH CAP
529+39.44	453.93' LT	747751.583	1491867.334	833.29	CP-6	REBAR WITH CAP

I, JEFFREY C. SPONTAK, P. S. have conducted a survey of the existing conditions for the Ohio Department of Transportation on JAN., FEB. & MAR. 2019. The results of that survey are contained herein. The horizontal coordinates expressed herein are based on the Ohio State Plane Coordinates System SOUTH Zone on NAD 83 2011 datum. The Project Coordinates (US Survey Feet) are relative to State Plane Grid Coordinates (Meters or US Survey Feet) by a Project Adjustment Factor of 0.99996789. As a part of this project I have reestablished the locations of the existing property lines and the existing centerline of Right of Way for property takes contained herein. As a part of this project I have established the proposed property lines, calculated the Gross Take, present roadway occupied (PRO), Net Take and Net Residue; as well as prepared the legal descriptions necessary to acquire the parcels as shown herein. As a part of this work I have set right of way monuments at the property corners, property line intersection, points along the right of way and/or angle points on the right of way, Section Corners and other points as shown herein. All of my work contained herein was conducted in accordance with Ohio Administrative Code 4733-37 commonly known as "Minimum Standards for Boundary Surveys in the State of Ohio" unless noted. The words I and my as used herein are to mean either myself or someone working under my direct supervision.

JEFFREY C. SPONTAK, Professional Land Surveyor 7856

Date: _____

SETTING OF ALL MONUMENTS SHALL BE PERFORMED BY A SURVEYOR REGISTERED IN THE STATE OF OHIO. THE MONUMENT ASSEMBLIES AND REFERENCE MONUMENTS WILL BE INSTALLED BY THE CONTRACTOR AT THE TIME OF CONSTRUCTION. THE IRON PIN AND CAP (WHEN REQUIRED) ARE TO BE INSTALLED BY THE CONTRACTOR'S SURVEYOR.

CHANGES OR ALTERATIONS TO THE LOCATION OF ANY MONUMENTS SHOWN IN THIS TABLE, REQUIRE PRIOR APPROVAL FROM THE DISTRICT REAL ESTATE ADMINISTRATOR OF THE OHIO DEPARTMENT OF TRANSPORTATION. IN THE EVENT THAT CHANGES OR ALTERATIONS ARE APPROVED, A REVISED CENTERLINE PLAT WITH THE NEW LOCATIONS SHALL BE RECORDED IN THE APPLICABLE COUNTY RECORDS AND THE OHIO DEPARTMENT OF TRANSPORTATION. SPECIFICATIONS FOR MONUMENT ASSEMBLIES, REFERENCE MONUMENTS AND RIGHT OF WAY MONUMENTS ARE SHOWN ON STANDARD CONSTRUCTION DRAWING RM-1.1.

RECEIVED _____, 20___
RECORDED _____, 20___
BOOK _____ PAGE _____

COUNTY RECORDER

HORIZONTAL SCALE IN FEET 0 50 100 200

PID NO. 108662

R/W DESIGNER BJO
R/W REVIEWER JCS

CENTERLINE PLAT

MIA-41-09.49

S:\CIN\4300--4399\4354\004\Drawings\CAD\108662\row\sheets\08662RC002.dgn 12/1/2021 5:04:45 PM CarlR

MIAMI COUNTY
CONCORD TOWNSHIP
CITY OF TROY
SEC. 21 & 28, T. 5 N., R. 6 E.
CONGRESS LANDS WEST OF THE MIAMI RIVER

EXISTING MONUMENT TABLE - SR 41

℄ of R/W & Constr. S.R. 41 (W. MAIN ST.		PROJECT COORDINATES SEE SURVEY CERTIFICATION		
STATION	OFFSET	NORTH (Y)	EAST (X)	DESCRIPTION
479+01.31	39.67' LT	749966.949	1487212.730	IRON PIN FOUND
481+29.55	40.38' RT	749782.899	1487369.672	IRON PIPE FOUND
481+42.74	40.17' LT	749845.871	1487421.602	IRON PIN FOUND
482+92.77	40.29' LT	749770.466	1487551.315	IRON PIN FOUND
483+93.47	39.76' LT	749719.324	1487638.058	IRON PIN FOUND
484+79.02	39.53' RT	749607.753	1487672.083	IRON PIPE FOUND
485+28.18	40.06' LT	749651.788	1487754.622	IRON PIN FOUND
485+57.83	39.85' RT	749567.805	1487739.965	IRON PIPE FOUND
486+77.80	40.00' RT	749507.183	1487843.496	IRON PIPE FOUND
487+89.96	40.04' LT	749520.433	1487980.889	MAG NAIL FOUND
487+97.51	40.00' RT	749447.294	1487947.404	IRON PIN FOUND
488+57.66	40.03' RT	749417.089	1487999.208	IRON PIPE FOUND
489+54.76	39.19' RT	749368.938	1488083.537	IRON PIN FOUND
490+22.60	39.94' RT	749334.148	1488141.776	IRON PIPE FOUND
490+85.33	39.68' RT	749302.797	1488196.109	IRON PIN FOUND
491+75.04	40.49' LT	749326.916	1488313.983	IRON PIN WITH CAP FOUND
491+71.17	40.00' RT	749259.311	1488270.123	IRON PIN FOUND
492+37.53	40.05' RT	749225.862	1488327.441	IRPON PIPE FOUND
492+55.76	41.30' LT	749286.990	1488384.136	IRON PIN FOUND
492+69.16	39.86' RT	749210.108	1488354.861	IRON PIPE FOUND
492+88.47	41.19' LT	749270.430	1488412.346	IRON PIN FOUND
493+05.95	38.43' RT	749192.827	1488387.373	IRON PIN FOUND
494+83.81	39.39' LT	749170.555	1488580.231	IRON PIPE FOUND
495+00.65	40.62' RT	749093.193	1488554.064	IRON PIN FOUND
495+84.20	39.43' LT	749118.830	1488666.856	IRON PIN FOUND
496+84.18	39.93' LT	749067.878	1488752.890	IRON PIN FOUND
498+84.29	40.00' RT	748896.329	1488883.530	IRON PIN FOUND
500+34.74	39.91' LT	748888.207	1489053.666	IRON PIN WITH CAP FOUND
501+34.40	38.10' RT	748770.218	1489099.537	IRON PIPE FOUND
501+94.66	40.66' LT	748807.159	1489191.570	MONUMENT BOX FOUND
503+99.75	55.08' RT	748620.106	1489318.995	IRON PIN FOUND
505+87.20	39.93' RT	748537.398	1489487.890	IRON PIN WITH CAP FOUND
508+47.63	39.99' RT	748404.335	1489711.764	IRON PIN FOUND
509+19.85	39.99' RT	748367.537	1489773.707	IRON PIN FOUND
509+45.75	40.38' LT	748423.126	1489837.264	MAG NAIL FOUND
511+02.85	49.35' RT	748265.777	1489926.332	IRON PIPE FOUND
511+17.24	49.50' LT	748343.440	1489989.160	IRON PIN FOUND
511+83.30	49.21' LT	748309.477	1490045.823	IRON PIN FOUND
512+16.21	49.20' RT	748208.051	1490023.904	IRON PIN WITH CAP FOUND
512+49.38	49.33' RT	748191.010	1490052.357	IRON PIN FOUND
512+99.19	49.02' RT	748165.860	1490095.354	IRON PIN FOUND
513+60.89	49.31' RT	748134.116	1490148.265	IRON PIN FOUND
514+15.22	49.51' LT	748191.379	1490245.416	IRON PIN FOUND
514+80.74	48.94' RT	748073.278	1490251.524	IRON PIN FOUND
516+44.03	49.30' RT	747989.636	1490391.761	IRON PIN FOUND
517+12.92	50.25' LT	748040.081	1490501.807	IRON PIPE FOUND
517+12.98	49.21' RT	747954.523	1490451.101	IRON PIN FOUND
519+37.16	50.65' RT	747838.875	1490643.154	IRON PIN FOUND

EXISTING MONUMENT TABLE - SIDE STREETS

℄ of R/W & Constr.			PROJECT COORDINATES SEE SURVEY CERTIFICATION		
STREET	STATION	OFFSET	NORTH (Y)	EAST (X)	DESCRIPTION
S. RIDGE AVE.	10+92.86	35.00' RT	1487632.103	749588.876	IRON PIPE FOUND
N. MADISON ST.	42+06.91	25.00' LT	749414.310	1488410.358	IRON PIN FOUND
S. CEDAR ST.	51+95.21	25.00' LT	748575.340	1488693.425	IRON PIN FOUND
N. CEDAR ST.	61+72.35	25.01' RT	749053.601	1489034.665	IRON PIN FOUND
N. CEDAR ST.	61+88.37	24.95' RT	749067.416	1489042.771	IRON PIN FOUND
S. ELM ST.	70+00.00	30.00' LT	748447.558	1489315.768	P.K. NAIL FOUND
S. ELM ST.	70+04.84	30.27' RT	748450.945	1489376.110	IRON PIN WITH CAP FOUND
HOBART DR.	90+60.54	33.00' LT	748245.302	1489931.439	IRON PIPE FOUND
N. OXFORD ST.	131+68.64	33.49' RT	748109.231	1490617.176	IRON PIN WITH CAP FOUND
N. OXFORD ST.	132+61.85	33.09' RT	748189.524	1490664.517	IRON PIPE FOUND
N. OXFORD ST.	133+21.61	33.00' RT	748243.496	1490696.544	IRON PIN FOUND
S. SHORT ST.	140+38.96	33.30' LT	747610.725	1490593.013	IRON PIN WITH CAP FOUND
S. SHORT ST.	141+01.56	33.98' LT	747664.859	1490624.457	IRON PIN FOUND
S. SHORT ST.	141+02.09	33.05' RT	747631.025	1490682.317	IRON PIN FOUND
S. SHORT ST.	142+01.75	33.00' LT	747750.450	1490676.555	IRON PIN FOUND
N. SHORT ST.	152+17.99	33.00' LT	748032.010	1490844.180	MAG NAIL FOUND
S. PLUM ST.	160+00.00	33.00' LT	747500.315	1490877.385	IRON PIN FOUND

HORIZONTAL SCALE IN FEET 0 50 100 200

PID NO. 108662

R/W DESIGNER BJO
R/W REVIEWER JCS

CENTERLINE PLAT

MIA-41-09.49

S:\CIN\4300--4399\4354\004\Drawings\CAD\108662\row\sheets\08662RC003.dgn 12/1/2021 5:04:45 PM CarlR

MIAMI COUNTY
CONCORD TOWNSHIP
CITY OF TROY
SEC. 21 & 28, T. 5 N., R. 6 E.
CONGRESS LANDS WEST OF THE MIAMI RIVER

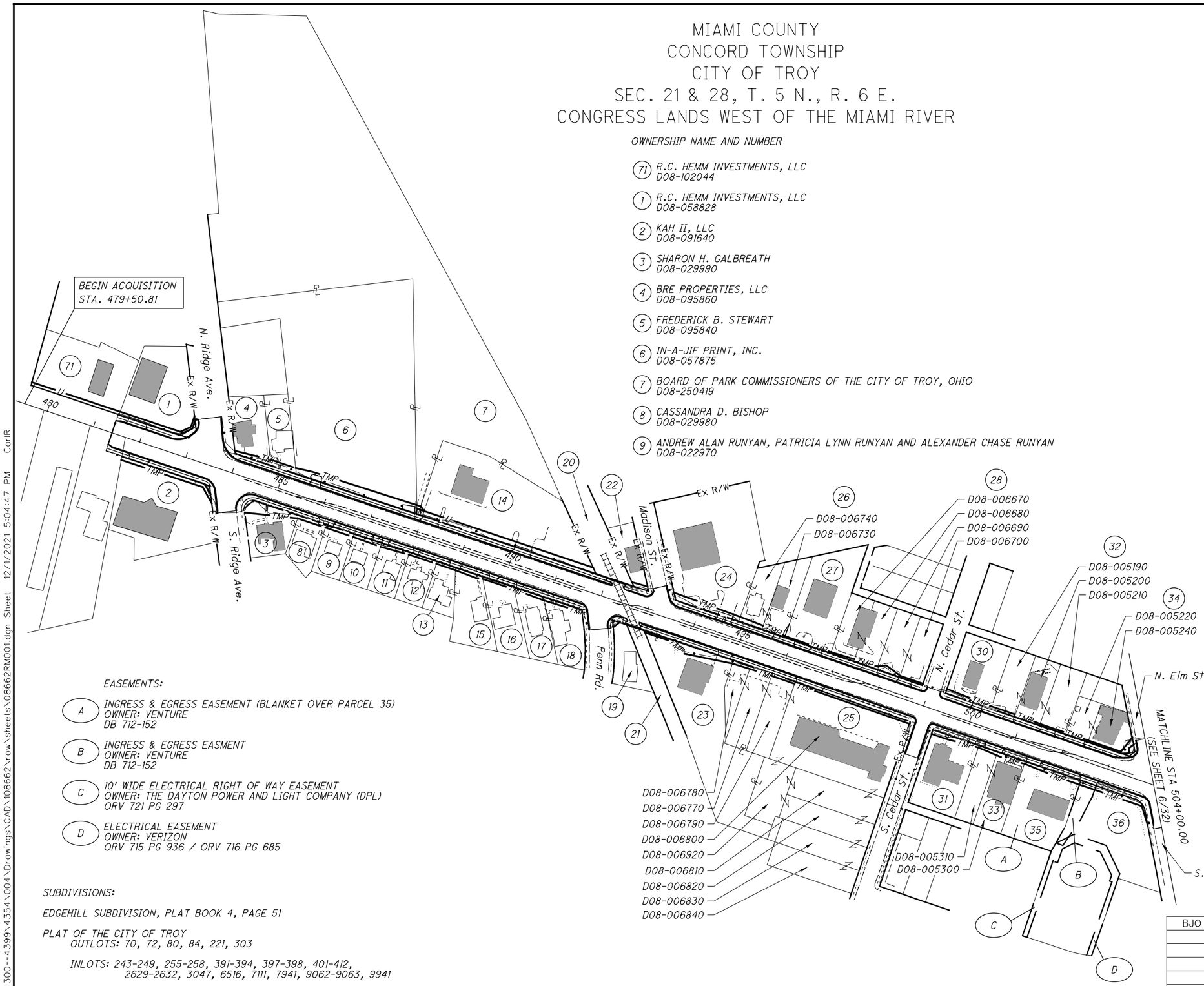

OWNERSHIP NAME AND NUMBER

(71) R.C. HEMM INVESTMENTS, LLC
D08-102044

(1) R.C. HEMM INVESTMENTS, LLC
D08-058828

(2) KAH II, LLC
D08-091640

(3) SHARON H. GALBREATH
D08-029990

(4) BRE PROPERTIES, LLC
D08-095860

(5) FREDERICK B. STEWART
D08-095840

(6) IN-A-JIF PRINT, INC.
D08-057875

(7) BOARD OF PARK COMMISSIONERS OF THE CITY OF TROY, OHIO
D08-250419

(8) CASSANDRA D. BISHOP
D08-029980

(9) ANDREW ALAN RUNYAN, PATRICIA LYNN RUNYAN AND ALEXANDER CHASE RUNYAN
D08-022970

(10) LUIS ARTURO FUENTES
D08-029960

(11) MARY BETH CHRISTIAN
D08-029950

(12) PATTY SAINT
D08-029940

(13) RONALD L. PENNY AND SHELLEY PENNY
D08-029930

(14) BROTHERHOOD LIMITED PARTNERSHIP
D08-057876

(15) ELIZABETH ANNE CLARK
D08-091840

(16) KEVIN C. KLATTE
D08-092000

(17) DAVID W. NEWNAM & JANET J. NEWNAM
D08-091980

(18) ROSEMARY BAYMAN, TRUSTEE
D08-031260

(19) MELISSA ALLEN
D08-030470

(20) CSX TRANSPORTATION, INC.
NOT AVAILABLE

(21) CSX TRANSPORTATION, INC.
NOT AVAILABLE

(22) K & T RENOVATIONS, LLC
D08-026290

(23) CD COMMUNITY PROPERTIES, LLC
D08-105492

(24) O'REILLY AUTO ENTERPRISE, LLC
D08-098360

(25) FIRST NATIONAL BANK & TRUST COMPANY
MULTIPLE

(26) YEA TROY REAL ESTATE, LLC
MULTIPLE

(27) KEVIN KREMER AND KEITH HUELSKAMP
D08-058814

(28) ZANN REAL ESTATE GROUP, LLC
MULTIPLE

(29) NOT USED

(30) HTM AREA CREDIT UNION
D08-005180

(31) GREENVILLE NATIONAL BANK
D08-005320

(32) WENDALIA REALITY LLC
MULTIPLE

(33) LA FIESTA, INC.
MULTIPLE

(34) RIDI REIO LLC
MULTIPLE

(35) THE ZWIEBEL FAMILY LIMITED PARTNERSHIP
D08-005290

(36) ZRT INVESTMENTS LLC
D08-005420

EASEMENTS:

(A) INGRESS & EGRESS EASEMENT (BLANKET OVER PARCEL 35)
OWNER: VENTURE
DB 712-152

(B) INGRESS & EGRESS EASMENT
OWNER: VENTURE
DB 712-152

(C) 10' WIDE ELECTRICAL RIGHT OF WAY EASEMENT
OWNER: THE DAYTON POWER AND LIGHT COMPANY (DPL)
ORV 721 PG 297

(D) ELECTRICAL EASEMENT
OWNER: VERIZON
ORV 715 PG 936 / ORV 716 PG 685

SUBDIVISIONS:

EDGEHILL SUBDIVISION, PLAT BOOK 4, PAGE 51

PLAT OF THE CITY OF TROY
OUTLOTS: 70, 72, 80, 84, 221, 303

INLOTS: 243-249, 255-258, 391-394, 397-398, 401-412, 2629-2632, 3047, 6516, 7111, 7941, 9062-9063, 9941

REV. BY	DATE	DESCRIPTION
BJO	03/15/21	INCLUDE PARCEL 0

DATE COMPLETED

HORIZONTAL SCALE IN FEET 0 50 100 200

PID NO. 108662

R/W DESIGNER BJO
R/W REVIEWER JCS

PROPERTY MAP

MIA-41-9.49

S:\CIN\4300--4399\4354\004\Drawings\CAD\108662\row\sheets\08662RM001.dgn Sheet 12/1/2021 5:04:47 PM CarlR

MIAMI COUNTY
CONCORD TOWNSHIP
CITY OF TROY
SEC. 21 & 28, T. 5 N., R. 6 E.
CONGRESS LANDS WEST OF THE MIAMI RIVER

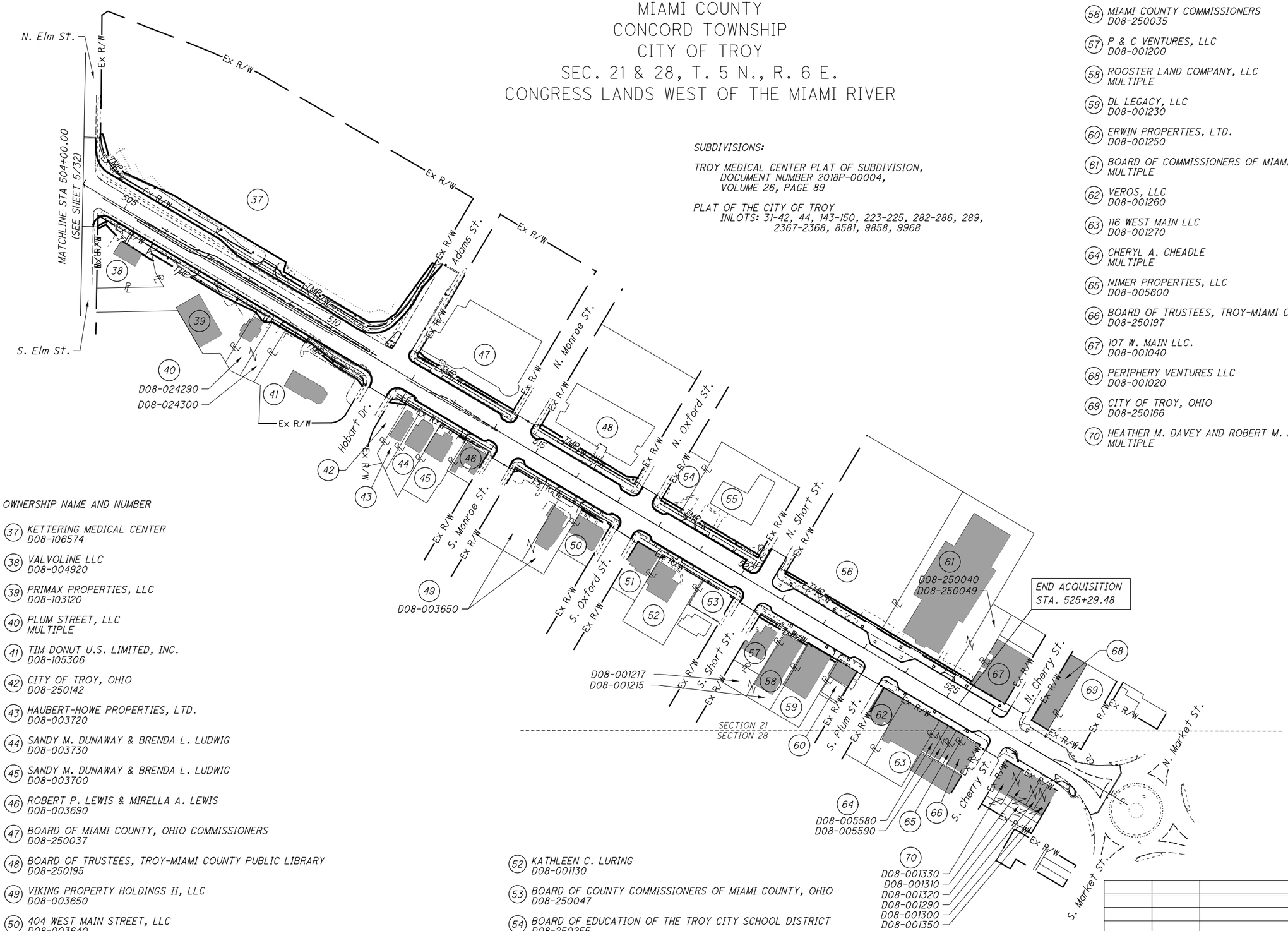

SUBDIVISIONS:

TROY MEDICAL CENTER PLAT OF SUBDIVISION,
DOCUMENT NUMBER 2018P-00004,
VOLUME 26, PAGE 89

PLAT OF THE CITY OF TROY
INLOTS: 31-42, 44, 143-150, 223-225, 282-286, 289,
2367-2368, 8581, 9858, 9968

OWNERSHIP NAME AND NUMBER

37 KETTERING MEDICAL CENTER
D08-106574

38 VALVOLINE LLC
D08-004920

39 PRIMAX PROPERTIES, LLC
D08-103120

40 PLUM STREET, LLC
MULTIPLE

41 TIM DONUT U.S. LIMITED, INC.
D08-105306

42 CITY OF TROY, OHIO
D08-250142

43 HAUBERT-HOWE PROPERTIES, LTD.
D08-003720

44 SANDY M. DUNAWAY & BRENDA L. LUDWIG
D08-003730

45 SANDY M. DUNAWAY & BRENDA L. LUDWIG
D08-003700

46 ROBERT P. LEWIS & MIRELLA A. LEWIS
D08-003690

47 BOARD OF MIAMI COUNTY, OHIO COMMISSIONERS
D08-250037

48 BOARD OF TRUSTEES, TROY-MIAMI COUNTY PUBLIC LIBRARY
D08-250195

49 VIKING PROPERTY HOLDINGS II, LLC
D08-003650

50 404 WEST MAIN STREET, LLC
D08-003640

51 JOHNATHAN N. COOMER AND/OR AMANDA M. COOMER, TRUSTEES OF THE COOMER FAMILY
D08-001110

52 KATHLEEN C. LURING
D08-001130

53 BOARD OF COUNTY COMMISSIONERS OF MIAMI COUNTY, OHIO
D08-250047

54 BOARD OF EDUCATION OF THE TROY CITY SCHOOL DISTRICT
D08-250255

55 BOARD OF EDUCATION OF THE CITY OF TROY, OHIO
D08-250180

56 MIAMI COUNTY COMMISSIONERS
D08-250035

57 P & C VENTURES, LLC
D08-001200

58 ROOSTER LAND COMPANY, LLC
MULTIPLE

59 DL LEGACY, LLC
D08-001230

60 ERWIN PROPERTIES, LTD.
D08-001250

61 BOARD OF COMMISSIONERS OF MIAMI COUNTY, OHIO
MULTIPLE

62 VEROS, LLC
D08-001260

63 116 WEST MAIN LLC
D08-001270

64 CHERYL A. CHEADLE
MULTIPLE

65 NIMER PROPERTIES, LLC
D08-005600

66 BOARD OF TRUSTEES, TROY-MIAMI COUNTY PUBLIC LIBRARY
D08-250197

67 107 W. MAIN LLC.
D08-001040

68 PERIPHERY VENTURES LLC
D08-001020

69 CITY OF TROY, OHIO
D08-250166

70 HEATHER M. DAVEY AND ROBERT M. DAVEY
MULTIPLE

REV. BY	DATE	DESCRIPTION

DATE COMPLETED

HORIZONTAL SCALE IN FEET 0 50 100 200

PID NO. 108662

R/W DESIGNER BJO
R/W REVIEWER JCS

PROPERTY MAP

MIA-41-9.49

S:\CIN\4300--4399\4354\004\Drawings\CAD\108662\row\sheets\08662RM002.dgn Sheet 12/1/2021 5:04:48 PM CarlR

TOTAL NUMBER OF :
53 OWNERSHIPS 0 TOTAL TAKES
61 PARCELS 0 OWNERSHIPS W/ STRUCTURES INVOLVED

NET RESIDUE = RECORD AREA - TOTAL PRO - NET TAKE

ALL AREAS IN ACRES

GRANTEE:
ALL RIGHT OF WAY ACQUIRED IN THE NAME OF
THE CITY OF TROY
UNLESS OTHERWISE SHOWN

PARCEL NO.	OWNER	SHEET NO.	OWNERS RECORD BOOK	OWNERS RECORD PAGE	AUDITOR'S PARCEL	RECORD AREA	TOTAL P.R.O.	GROSS TAKE	P.R.O. IN TAKE	NET TAKE	STRUCTURE	NET RESIDUE LEFT	NET RESIDUE RIGHT	TYPE FUND	REMARKS	AS ACQUIRED BOOK	AS ACQUIRED PAGE
1-WD	R.C. HEMM INVESTMENTS, LLC	13 & 14	2020OR	-02599	D08-058828	0.492	0.000	0.009	0.000	0.009	NO	0.483		LOCAL	TO CONSTRUCT PROPOSED WALK NET TAKE 380 SQUARE FEET		
1-U					D08-058828	0.492	0.000	0.020	0.000	0.020	NO				FOR OVERHEAD ELECTRIC UTILITY		
1-T					D08-058828	0.492	0.000	0.024	0.000	0.024	NO				36 MONTH DURATION 178 SQUARE FEET, TO COMPLETE GRADING TO CONSTRUCT PROPOSED WALK PRIVATE SIGNS & PARKING LOT (DO NOT DISTURB) PRIVATE LANDSCAPING (MINIMIZE DISTURBANCE)		
2-WD	KAH II, LLC	13 & 14	OR 185	951	D08-091640	1.008	0.000	0.275	0.273	0.002	NO		0.733		TO CONSTRUCT PROPOSED WALK NET TAKE 81 SQUARE FEET		
2-T					D08-091640	1.008	0.000	0.033	0.000	0.033	NO				36 MONTH DURATION TO COMPLETE GRADING TO CONSTRUCT PROPOSED WALK PARKING LOT (DO NOT DISTURB) PRIVATE LANDSCAPING (MINIMIZE DISTURBANCE)		
3-T	SHARON H. GALBREATH	13 & 14	DB 631	553	D08-029990	0.17	0.000	0.042	0.000	0.042	NO				TO COMPLETE GRADING PRIVATE SIGN (DO NOT DISTURB) TREE TO REMAIN		
4-T	BRE PROPERTIES, LLC	13 & 14	2017OR	-01210	D08-095860	0.22	0.000	0.014	0.000	0.014	NO				TO COMPLETE GRADING TO CONSTRUCT PROPOSED WALK TREES/BUSHES TO REMAIN		
5-T	FREDERICK B. STEWART	13 & 14	2016OR	-03303	D08-095840	0.18	0.000	0.014	0.000	0.014	NO				TO COMPLETE GRADING TO CONSTRUCT PROPOSED WALK		
6-T	IN-A-JIF PRINT, INC.	13, 14 15, 16	DB 710	945	D08-057875	2.679	0.000	0.093	0.000	0.093	NO				TO COMPLETE GRADING TO CONSTRUCT PROPOSED DRIVE AND WALK PRIVATE SIGNS (DO NOT DISTURB) TREE (DO NOT DISTURB)		
7-T	BOARD OF PARK COMMISSIONERS OF THE CITY OF TROY, OHIO	15 & 16	DB 722	53	D08-250419	5.971	0.000	0.002	0.000	0.002	NO				TO COMPLETE GRADING NET TAKE 95 SQUARE FEET		
8-T	CASSANDRA D. BISHOP	13 & 14	2017OR	-00716	D08-029980	0.14	0.000	0.008	0.000	0.008	NO				TO CONSTRUCT PROPOSED DRIVE AND WALK NET TAKE 360 SQUARE FEET		
9-T	ANDREW ALAN RUNYAN, PATRICIA LYNN RUNYAN AND ALEXANDER CHASE RUNYAN	13 & 14	2019OR	-09111	D08-022970	0.14	0.000	0.008	0.000	0.008	NO				TO CONSTRUCT PROPOSED DRIVE AND WALK NET TAKE 360 SQUARE FEET		
10-T	LUIS ARTURO FUENTES	13, 14 15, 16	DB 798	102	D08-029960	0.14	0.000	0.009	0.000	0.009	NO				TO CONSTRUCT PROPOSED DRIVE AND WALK NET TAKE 409 SQUARE FEET		
11-T	MARY BETH CHRISTIAN	15 & 16	2016OR	-02441	D08-029950	0.14(c)	0.000	0.009	0.000	0.009	NO				TO CONSTRUCT PROPOSED DRIVE AND WALK NET TAKE 372 SQUARE FEET		
12-T	PATTY SAINT	15 & 16	2014OR	-02417	D08-029940	0.14	0.000	0.007	0.000	0.007	NO			LOCAL	TO CONSTRUCT PROPOSED DRIVE AND WALK NET TAKE 285 SQUARE FEET		

LEGEND:
WD = WARRANTY DEED
SH = STANDARD HIGHWAY EASEMENT
SL = SLOPE EASEMENT
CH = CHANNEL EASEMENT
PR = PROPERTY RIGHT
T = TEMPORARY
U = UTILITY EASEMENT

NOTE: ALL TEMPORARY PARCELS TO BE OF 18 MONTH DURATION, UNLESS NOTED OTHERWISE IN REMARKS COLUMN.

NOTE: UNDER NO CIRCUMSTANCES ARE TEMPORARY EASEMENTS TO BE USED FOR STORAGE OF MATERIAL OR EQUIPMENT BY THE CONTRACTOR UNLESS NOTED OTHERWISE.

(c) = CALCULATED AREA

✱ DENOTES RIGHT OF WAY ENCROACHMENT

REV. BY	DATE	DESCRIPTION

FIELD REVIEW BY DATE:
OWNERSHIP VERIFIED BY DATE:
DATE COMPLETED

FEDERAL PROJECT NO. E190578
PID NO. 108662
STATE JOB NO. 471151
R/W DESIGNER BJO
R/W REVIEWER JCS

SUMMARY OF ADDITIONAL RIGHT OF WAY

MIA-41-9.49

S:\CIN\4300-4399\4354\004\Drawings\CAD\108662\row\sheets\08662RS001.dgn Sheet 12/1/2021 5:04:57 PM CarlR

NET RESIDUE = RECORD AREA - TOTAL PRO - NET TAKE

ALL AREAS IN ACRES

GRANTEE:
ALL RIGHT OF WAY ACQUIRED IN THE NAME OF
THE CITY OF TROY
UNLESS OTHERWISE SHOWN

PARCEL NO.	OWNER	SHEET NO.	OWNERS RECORD BOOK	OWNERS RECORD PAGE	AUDITOR'S PARCEL	RECORD AREA	TOTAL P.R.O.	GROSS TAKE	P.R.O. IN TAKE	NET TAKE	STRUC-TURE	NET RESIDUE LEFT	NET RESIDUE RIGHT	TYPE FUND	REMARKS	AS ACQUIRED BOOK	AS ACQUIRED PAGE
13-T	RONALD L. PENNY	15 & 16	DB 682	526	D08-029930	0.11	0.000	0.004	0.000	0.004	NO			LOCAL	TO COMPLETE GRADING		
	AND SHELLEY PENNY														TO CONSTRUCT PROPOSED DRIVE AND WALK		
															NET TAKE 193 SQUARE FEET		
															TREE (DO NOT DISTURB)		
14-U	BROTHERHOOD LIMITED PARTNERSHIP	15 & 16	2014OR-10328		D08-057876	1.076	0.000	0.087	0.000	0.087	NO				TO RELOCATE ELECTRIC UTILITY		
14-T					D08-057876	1.076	0.000	0.088	0.000	0.088	NO				TO CONSTRUCT PROPOSED WALK		
															PRIVATE LANDSCAPING (MINIMIZE DISTURBANCE)		
															PRIVATE SIGNS (DO NOT DISTURB)		
															OVERLAPS WITH U EASEMENT		
15-T	ELIZABETH ANNE CLARK	15 & 16	DB 774	863	D08-091840	0.232	0.000	0.008	0.000	0.008	NO				TO COMPLETE GRADING		
															TO CONSTRUCT PROPOSED DRIVE AND WALK		
															NET TAKE 330 SQUARE FEET		
16-T	KEVIN C. KLATTE	15 & 16	2014OR-02722		D08-092000	0.24	0.000	0.006	0.000	0.006	NO				TO CONSTRUCT PROPOSED DRIVE AND WALK		
															NET TAKE 267 SQUARE FEET		
															TREE/BUSH (DO NOT DISTURB)		
17-T	DAVID W. NEWNAM & JANET J. NEWNAM	15 & 16	2012OR-02396		D08-091980	0.2	0.000	0.008	0.000	0.008	NO				TO CONSTRUCT PROPOSED DRIVE AND WALK		
															NET TAKE 327 SQUARE FEET		
18-T	ROSEMARY BAYMAN, TRUSTEE	15 & 16	2012OR-13783		D08-031260	0.22	0.000	0.010	0.000	0.010	NO				TO CONSTRUCT PROPOSED WALK		
															430 SQUARE FEET		
19-WD	MELISSA ALLEN	17 & 18	2018OR-08479		D08-030470	0.165	0.000	0.0002	0.000	0.0002	NO		0.165		TO CONSTRUCT PROPOSED WALK		
															NET TAKE 10 SQUARE FEET		
19-T					D08-030470	0.165	0.000	0.002	0.000	0.002	NO				TO COMPLETE GRADING		
															NET TAKE 90 SQUARE FEET		
20	CSX TRANSPORTATION, INC	15, 16			NOT										NO TAKE		
		17 & 18			AVAILABLE												
21	CSX TRANSPORTATION, INC	17 & 18			NOT										NO TAKE		
					AVAILABLE												
22-WD	K & T RENOVATIONS, LLC	17 & 18	2021OR-07391		D08-026290	0.15	0.000	0.0002	0.000	0.0002	NO	0.150			TO CONSTRUCT PROPOSED WALK		
															NET TAKE 8 SQUARE FEET		
22-T					D08-026290	0.15	0.000	0.006	0.000	0.006	NO				TO COMPLETE GRADING		
															NET TAKE 247 SQUARE FEET		
23-T	CD COMMUNITY PROPERTIES, LLC	17 & 18	DB 767	936	D08-105492	0.958	0.000	0.040	0.000	0.040	NO				TO COMPLETE GRADING		
															PRIVATE SIGN (DO NOT DISTURB)		
															PRIVATE LANDSCAPING (MINIMIZE DISTURBANCE)		
24-T	O'REILLY AUTO ENTERPRISES, LLC	17 & 18	2014OR-04583		D08-098360	1.027	0.000	0.038	0.000	0.038	NO			LOCAL	TO COMPLETE GRADING		
															TO CONSTRUCT PROPOSED DRIVE AND WALK		
															PRIVATE SIGN (DO NOT DISTURB)		
															PRIVATE LANDSCAPING (MINIMIZE DISTURBANCE)		
															PARKING LOT (DO NOT DISTURB)		

LEGEND:
WD = WARRANTY DEED
SH = STANDARD HIGHWAY EASEMENT
SL = SLOPE EASEMENT
CH = CHANNEL EASEMENT
PR = PROPERTY RIGHT
T = TEMPORARY
U = UTILITY EASEMENT

NOTE: ALL TEMPORARY PARCELS TO BE OF 18 MONTH DURATION, UNLESS NOTED OTHERWISE IN REMARKS COLUMN.

NOTE: UNDER NO CIRCUMSTANCES ARE TEMPORARY EASEMENTS TO BE USED FOR STORAGE OF MATERIAL OR EQUIPMENT BY THE CONTRACTOR UNLESS NOTED OTHERWISE.

(c) = CALCULATED AREA

* DENOTES RIGHT OF WAY ENCROACHMENT

REV. BY	DATE	DESCRIPTION

FIELD REVIEW BY DATE:
OWNERSHIP VERIFIED BY DATE:
DATE COMPLETED

FEDERAL PROJECT NO. E190578
PID NO. 108662
STATE JOB NO. 471151
R/W DESIGNER BJO
R/W REVIEWER JCS

SUMMARY OF ADDITIONAL RIGHT OF WAY

MIA-41-9.49

S:\CIN\4300--4399\4354\004\Drawings\CAD\108662\row\sheets\08662RS002.dgn Sheet 12/1/2021 5:05:05 PM CarlR

NET RESIDUE = RECORD AREA - TOTAL PRO - NET TAKE

ALL AREAS IN ACRES

GRANTEE:
ALL RIGHT OF WAY ACQUIRED IN THE NAME OF
THE CITY OF TROY
UNLESS OTHERWISE SHOWN

PARCEL NO.	OWNER	SHEET NO.	OWNERS RECORD BOOK	OWNERS RECORD PAGE	AUDITOR'S PARCEL	RECORD AREA	TOTAL P.R.O.	GROSS TAKE	P.R.O. IN TAKE	NET TAKE	STRUCTURE	NET RESIDUE LEFT	NET RESIDUE RIGHT	TYPE FUND	REMARKS	AS ACQUIRED BOOK	AS ACQUIRED PAGE
25-T1	FIRST NATIONAL BANK &	17, 18	DB 523	677	D08-006780	0.091	0.000	0.005	0.000	0.005	NO			LOCAL	TO CONSTRUCT PROPOSED WALK		
	TRUST COMPANY	19 & 20													PARKING LOT (DO NOT DISTURB)		
															PRIVATE LANDSCAPING (DO NOT DISTURB)		
25-T2					D08-006770	0.178	0.000	0.005	0.000	0.005	NO				SAME AS 25-T1		
25-T3					D08-006790	0.189	0.000	0.005	0.000	0.005	NO				SAME AS 25-T1		
25-T4					D08-006800	0.95	0.000	0.023	0.000	0.023	NO				SAME AS 25-T1		
					D08-006810	0.22	0.000	0.000	0.000	0.000							
					D08-006820	0.22	0.000	0.000	0.000	0.000							
					D08-006830	0.21	0.000	0.000	0.000	0.000							
					D08-006840	0.21	0.000	0.000	0.000	0.000							
					D08-006920	0.196	0.000	0.000	0.000	0.000							
	TOTAL					2.464	0.000	0.038	0.000	0.038							
26-T1	YEA TROY REAL ESTATE, LLC	17 & 18	2015OR-08100		D08-006740	0.15	0.000	0.010	0.000	0.010	NO				TO COMPLETE GRADING		
															TO CONSTRUCT PROPOSED DRIVE		
															RETAINING WALL (DO NOT DISTURB)		
															CONCRETE STEPS (DO NOT DISTURB)		
															BUSHES TO REMAIN		
26-T2					D08-006730	0.19	0.000	0.006	0.000	0.006	NO				SAME AS 26-T1		
	TOTAL					0.34	0.000	0.016	0.000	0.016							
27-T	KEVIN KREMER & KEITH HUELSKAMP	17 & 18	DB 769	890	D08-058814	0.472(c)	0.000	0.005	0.000	0.005	NO				TO CONSTRUCT PROPOSED DRIVE AND WALK		
															NET TAKE 222 SQUARE FEET		
															PARKING LOT (DO NOT DISTURB)		
28-T1	ZANN REAL ESTATE GROUP, LLC	17, 18	2019OR-01873		D08-006670	0.15	0.000	0.004	0.000	0.004	NO				TO COMPLETE GRADING		
		19 & 20													TO CONSTRUCT PROPOSED DRIVE AND WALK		
															PRIVATE SIGNS (DO NOT DISTURB)		
															PARKING LOT (DO NOT DISTURB)		
28-T2					D08-006680	0.15	0.000	0.006	0.000	0.006	NO				SAME AS 28-T1		
28-T3					D08-006690	0.15	0.000	0.010	0.000	0.010	NO				SAME AS 28-T1		
28-T4					D08-006700	0.15	0.000	0.003	0.000	0.003	NO				SAME AS 28-T1		
	TOTAL					0.60	0.000	0.023	0.000	0.023							
29	NOT USED														NOW PART OF PARCEL 28		
30-T	HTM AREA CREDIT UNION	19 & 20	OR 1	319	D08-005180	0.3	0.000	0.015	0.000	0.015	NO				TO COMPLETE GRADING		
															TO CONSTRUCT PROPOSED DRIVE AND WALK		
															PARKING LOT (DO NOT DISTURB)		
															PRIVATE SIGN (DO NOT DISTURB)		
															PRIVATE LANDSCAPING (MINIMIZE DISTURBANCE)		
31-T	GREENVILLE NATIONAL BANK	19 & 20	2017OR-11844		D08-005320	0.36	0.000	0.017	0.000	0.017	NO			LOCAL	TO COMPLETE GRADING		
															PRIVATE SIGN (DO NOT DISTURB)		
															PRIVATE LANDSCAPING (MINIMIZE DISTURBANCE)		

LEGEND:
WD = WARRANTY DEED
SH = STANDARD HIGHWAY EASEMENT
SL = SLOPE EASEMENT
CH = CHANNEL EASEMENT
PR = PROPERTY RIGHT
T = TEMPORARY
U = UTILITY EASEMENT

NOTE: ALL TEMPORARY PARCELS TO BE OF 18 MONTH DURATION, UNLESS NOTED OTHERWISE IN REMARKS COLUMN.

NOTE: UNDER NO CIRCUMSTANCES ARE TEMPORARY EASEMENTS TO BE USED FOR STORAGE OF MATERIAL OR EQUIPMENT BY THE CONTRACTOR UNLESS NOTED OTHERWISE.

(c) = CALCULATED AREA

* DENOTES RIGHT OF WAY ENCROACHMENT

REV. BY	DATE	DESCRIPTION

FIELD REVIEW BY DATE:
OWNERSHIP VERIFIED BY DATE:
DATE COMPLETED

FEDERAL PROJECT NO. E190578
PID NO. 108662
STATE JOB NO. 471151
R/W DESIGNER BJO
R/W REVIEWER JCS

SUMMARY OF ADDITIONAL RIGHT OF WAY

MIA-41-9.49

S:\CIN\4300--4399\4354\004\Drawings\CAD\108662\row\sheets\08662RS003.dgn Sheet 12/1/2021 5:05:14 PM CarlR

NET RESIDUE = RECORD AREA - TOTAL PRO - NET TAKE

ALL AREAS IN ACRES

GRANTEE:
ALL RIGHT OF WAY ACQUIRED IN THE NAME OF
THE CITY OF TROY
UNLESS OTHERWISE SHOWN

PARCEL NO.	OWNER	SHEET NO.	OWNERS RECORD BOOK	OWNERS RECORD PAGE	AUDITOR'S PARCEL	RECORD AREA	TOTAL P.R.O.	GROSS TAKE	P.R.O. IN TAKE	NET TAKE	STRUC-TURE	NET RESIDUE LEFT	NET RESIDUE RIGHT	TYPE FUND	REMARKS	AS ACQUIRED BOOK	AS ACQUIRED PAGE
32-T1	WENDALIA REALTY LLC	19 & 20	2012OR-	18249	D08-005190	0.15	0.000	0.006	0.000	0.006	NO			LOCAL	TO CONSTRUCT PROPOSED DRIVE AND WALK		
															PARKING LOT (DO NOT DISTURB)		
															PRIVATE LANDSCAPING (MINIMIZE DISTURBANCE)		
															PRIVATE SIGNS (DO NOT DISTURB)		
32-T2					D08-005200	0.17	0.000	0.005	0.000	0.005	NO				SAME AS 32-T1		
32-T3					D08-005210	0.17	0.000	0.004	0.000	0.004	NO				SAME AS 32-T1		
	TOTAL					0.49	0.000	0.015	0.000	0.015							
33-T1	LA FIESTA, INC.	19 & 20	2015OR-	07625	D08-005310	0.18	0.000	0.005	0.000	0.005	NO				TO COMPLETE GRADING		
															TO CONSTRUCT PROPOSED DRIVE		
															PARKING LOT (DO NOT DISTURB)		
															PRIVATE LANDSCAPING (MINIMIZE DISTURBANCE)		
33-T2					D08-005300	0.18	0.000	0.010	0.000	0.010	NO				SAME AS 33-T1		
	TOTAL					0.36	0.000	0.015	0.000	0.015							
34-WD	RIDI REIO LLC	19, 20	2019OR-	07492	D08-005240	0.148	0.000	0.005	0.000	0.005	NO	0.143			TO CONSTRUCT PROPOSED WALK		
		21 & 22													TO PLACE PROPOSED SIGNAL POLE		
															MONITORING WELL (DO NOT DISTURB)		
															EXISTING LIGHTPOLE TO REMAIN		
															PRIVATE SIGN TO REMAIN		
															NET TAKE 223 SQUARE FEET		
34-T1					D08-005220	0.09	0.000	0.003	0.000	0.003	NO				TO COMPLETE GRADING		
34-T2					D08-005240	0.148	0.000	0.013	0.000	0.013	NO				SAME AS 34-T1		
	TOTAL					0.238	0.000	0.016	0.000	0.016							
35-T	THE ZWIEBEL FAMILY LIMITED	19, 20	DB 714	360	D08-005290	0.429	0.000	0.021	0.000	0.021	NO				TO COMPLETE GRADING		
	PARTNERSHIP	21 & 22													TO CONSTRUCT PROPOSED DRIVE AND WALK		
															PARKING LOT (DO NOT DISTURB)		
															TREES/BUSHES TO REMAIN		
36-T	ZRT INVESTMENTS LLC	21 & 22	DB 712	146	D08-005420	1.319	0.000	0.029	0.000	0.029	NO				TO COMPLETE GRADING		
															PARKING LOT (DO NOT DISTURB)		
															TREES TO REMAIN		
															PRIVATE LANDSCAPING (MINIMIZE DISTURBANCE)		
37-T	KETTERING MEDICAL CENTER	21, 22	2018OR-	11385	D08-106574	11.959	0.000	0.286	0.000	0.286	NO				TO CONSTRUCT PROPOSED DRIVE AND WALK		
		23 & 24													TO COMPLETE GRADING		
															PARKING LOT (DO NOT DISTURB)		
															PRIVATE LANDSCAPING (MINIMIZE DISTURBANCE)		
															BLOCK WALL & PRIVATE SIGN (DO NOT DISTURB)		
38-WD	VALVOLINE LLC	21 & 22	2017OR-	08915	D08-004920	0.321	0.000	0.005	0.000	0.005	NO		0.316		TO CONSTRUCT PROPOSED WALK		
															TO PLACE PROPOSED SIGNAL POLE		
															NET TAKE 210 SQUARE FEET		
38-T					D08-004920	0.321	0.000	0.053	0.000	0.053	NO			LOCAL	TO COMPLETE GRADING		
															TO CONSTRUCT PROPOSED DRIVE AND WALK		
															PRIVATE SIGN (DO NOT DISTURB)		
															PRIVATE LANDSCAPING (MINIMIZE DISTURBANCE)		

LEGEND:
WD = WARRANTY DEED
SH = STANDARD HIGHWAY EASEMENT
SL = SLOPE EASEMENT
CH = CHANNEL EASEMENT
PR = PROPERTY RIGHT
T = TEMPORARY
U = UTILITY EASEMENT

NOTE: ALL TEMPORARY PARCELS TO BE OF 18 MONTH DURATION, UNLESS NOTED OTHERWISE IN REMARKS COLUMN.

NOTE: UNDER NO CIRCUMSTANCES ARE TEMPORARY EASEMENTS TO BE USED FOR STORAGE OF MATERIAL OR EQUIPMENT BY THE CONTRACTOR UNLESS NOTED OTHERWISE.

(c) = CALCULATED AREA

* DENOTES RIGHT OF WAY ENCROACHMENT

REV. BY	DATE	DESCRIPTION

FIELD REVIEW BY DATE:
OWNERSHIP VERIFIED BY DATE:
DATE COMPLETED

FEDERAL PROJECT NO. E190578
PID NO. 108662
STATE JOB NO. 471151
R/W DESIGNER BJO
R/W REVIEWER JCS

SUMMARY OF ADDITIONAL RIGHT OF WAY

MIA-41-9.49

S:\CIN\4300--4399\4354\004\Drawings\CAD\108662\row\sheets\08662RS004.dgn Sheet 12/1/2021 5:05:14 PM CarlR

NET RESIDUE = RECORD AREA - TOTAL PRO - NET TAKE

ALL AREAS IN ACRES

GRANTEE:
ALL RIGHT OF WAY ACQUIRED IN THE NAME OF
THE CITY OF TROY
UNLESS OTHERWISE SHOWN

PARCEL NO.	OWNER	SHEET NO.	OWNERS RECORD BOOK	OWNERS RECORD PAGE	AUDITOR'S PARCEL	RECORD AREA	TOTAL P.R.O.	GROSS TAKE	P.R.O. IN TAKE	NET TAKE	STRUC-TURE	NET RESIDUE LEFT	NET RESIDUE RIGHT	TYPE FUND	REMARKS	AS ACQUIRED BOOK	AS ACQUIRED PAGE
39-T	PRIMAX PROPERTIES, LLC	21, 22	DB 688	789	D08-103120	0.693	0.000	0.064	0.000	0.064	NO			LOCAL	TO COMPLETE GRADING		
		23 & 24													TO CONSTRUCT PROPOSED WALK		
															PARKING LOT (DO NOT DISTURB)		
															TREES TO REMAIN		
															PRIVATE LANDSCAPING (MINIMIZE DISTURBANCE)		
40-T1	PLUM STREET, LLC	23 & 24	DB 761	329	D08-024290	0.12	0.000	0.010	0.000	0.010	NO				TO COMPLETE GRADING		
															TO CONSTRUCT PROPOSED WALK		
															PRIVATE SIGN TO REMAIN		
															BUILDING (DO NOT DISTURB)		
															PRIVATE LANDSCAPING (MINIMIZE DISTURBANCE)		
40-T2					D08-024300	0.1	0.000	0.004	0.000	0.004	NO				SAME AS 40-T1		
	TOTAL					0.22	0.000	0.014	0.000	0.014							
41-T	TIM DONUT U.S. LIMITED, INC.	23 & 24	DB 747	142	D08-105306	0.688	0.000	0.028	0.000	0.028	NO				TO CONSTRUCT PROPOSED WALK		
															PRIVATE SIGNS TO REMAIN (DND)		
															PARKING LOT (DO NOT DISTURB)		
															TREES TO REMAIN		
															PRIVATE LANDSCAPING (MINIMIZE DISTURBANCE)		
42-T	CITY OF TROY, OHIO	23, 24	DB 735	136	D08-250142	0.103	0.000	0.005	0.000	0.005	NO				TO CONSTRUCT PROPOSED DRIVE AND WALK		
		25 & 26													TREE TO REMAIN		
															PRIVATE LANDSCAPING (MINIMIZE DISTURBANCE)		
43	HAUBERT-HOWE PROPERTIES, LTD.	25 & 26	DB 780	821	D08-003720	0.09					NO				NO TAKE		
44	SANDY M. DUNAWAY	25 & 26	DB 661	599	D08-003730	0.181					NO				NO TAKE		
	& BRENDA L. LUDWIG																
45-T	SANDY M. DUNAWAY	25 & 26	DB 615	780	D08-003700	0.19	0.000	0.001	0.000	0.001	NO				TO CONSTRUCT PROPOSED DRIVE AND WALK		
	& BRENDA L. LUDWIG														NET TAKE 32 SQUARE FEET		
46	ROBERT P. LEWIS	25 & 26	DB 781	253	D08-003690	0.094					NO				NO TAKE		
	& MIRELLA A. LEWIS																
47-T	BOARD OF MIAMI COUNTY, OHIO	23, 24	DB 680	45	D08-250037	1.807	0.000	0.025	0.000	0.025	NO				TO COMPLETE GRADING		
	COMMISSIONERS	25 & 26													TO CONSTRUCT PROPOSED WALK		
															PRIVATE LANDSCAPING (MINIMIZE DISTURBANCE)		
48-T	BOARD OF TRUSTEES, TROY-MIAMI	25, 26	DB 725	737	D08-250195	1.32	0.000	0.038	0.000	0.038	NO				TO CONSTRUCT PROPOSED WALK		
	COUNTY PUBLIC LIBRARY	27 & 28													EXISTING LIGHTPOLES (DO NOT DISTURB)		
															WALL (DO NOT DISTURB)		
															PRIVATE SIGN (DO NOT DISTURB)		
															PRIVATE LANDSCAPING (DO NOT DISTURB)		
49-T	VIKING PROPERTY HOLDINGS II, LLC	25 & 26	2013OR-15096		D08-003650	0.599	0.000	0.001	0.000	0.001	NO				TO CONSTRUCT PROPOSED WALK		
															NET TAKE 32 SQUARE FEET		
															PARKING LOT (DO NOT DISTURB)		
50-T	404 WEST MAIN STREET, LLC	25 & 26	2019OR-02186		D08-003640	0.16	0.000	0.005	0.000	0.005	NO				TO CONSTRUCT PROPOSED WALK		
		27 & 28													NET TAKE 207 SQUARE FEET		
51	JOHNATHAN N. COOMER AND/OR	27 & 28	DB 789	737	D08-001110	0.15					NO			LOCAL	NO TAKE		
	AMANDA M. COOMER, TRUSTEES														BUILDING AT R/W (DO NOT DISTURB)		

LEGEND:
WD = WARRANTY DEED
SH = STANDARD HIGHWAY EASEMENT
SL = SLOPE EASEMENT
CH = CHANNEL EASEMENT
PR = PROPERTY RIGHT
T = TEMPORARY
U = UTILITY EASEMENT

NOTE: ALL TEMPORARY PARCELS TO BE OF 18 MONTH DURATION, UNLESS NOTED OTHERWISE IN REMARKS COLUMN.

NOTE: UNDER NO CIRCUMSTANCES ARE TEMPORARY EASEMENTS TO BE USED FOR STORAGE OF MATERIAL OR EQUIPMENT BY THE CONTRACTOR UNLESS NOTED OTHERWISE.

(c) = CALCULATED AREA

* DENOTES RIGHT OF WAY ENCROACHMENT

REV. BY	DATE	DESCRIPTION

FIELD REVIEW BY DATE:
OWNERSHIP VERIFIED BY DATE:
DATE COMPLETED

FEDERAL PROJECT NO. E190578
PID NO. 108662
STATE JOB NO. 471151
R/W DESIGNER BJO
R/W REVIEWER JCS

SUMMARY OF ADDITIONAL RIGHT OF WAY

MIA-41-9.49

S:\CIN\4300--4399\4354\004\Drawings\CAD\108662\row\sheets\08662RS005.dgn Sheet 12/1/2021 5:05:23 PM CarlR

NET RESIDUE = RECORD AREA - TOTAL PRO - NET TAKE

ALL AREAS IN ACRES

GRANTEE:
ALL RIGHT OF WAY ACQUIRED IN THE NAME OF
THE CITY OF TROY
UNLESS OTHERWISE SHOWN

PARCEL NO.	OWNER	SHEET NO.	OWNERS RECORD BOOK	OWNERS RECORD PAGE	AUDITOR'S PARCEL	RECORD AREA	TOTAL P.R.O.	GROSS TAKE	P.R.O. IN TAKE	NET TAKE	STRUC-TURE	NET RESIDUE LEFT	NET RESIDUE RIGHT	TYPE FUND	REMARKS	AS ACQUIRED BOOK	AS ACQUIRED PAGE
52-T	KATHLEEN C. LURING	27 & 28	DB 592	405-407	D08-001130	0.36	0.000	0.0004	0.000	0.0004	NO			LOCAL	TO CONSTRUCT PROPOSED WALK		
															NET TAKE 20 SQUARE FEET		
															PRIVATE WALK (DO NOT DISTURB)		
															PRIVATE LANDSCAPING (DO NOT DISTURB)		
53	BOARD OF COUNTY COMMISSIONERS	27 & 28	DB 504	387	D08-250047	0.1					NO				NO TAKE		
	OF MIAMI COUNTY, OHIO																
54-T	BOARD OF EDUCATION OF THE	27 & 28	DB 732	201	D08-250255	0.13	0.000	0.007	0.000	0.007	NO				TO COMPLETE GRADING		
	TROY CITY SCHOOL DISTRICT														TO CONSTRUCT PROPOSED WALK		
															NET TAKE 291 SQUARE FEET		
55-T	BOARD OF EDUCATION OF THE	27 & 28	DB 231	489	D08-250180	0.71	0.000	0.026	0.000	0.026	NO				TO COMPLETE GRADING		
	CITY OF TROY, OHIO														TO CONSTRUCT PROPOSED DRIVE AND WALK		
															PRIVATE SIGN (DO NOT DISTURB)		
															PRIVATE LIGHT FIXTURE (DO NOT DISTURB)		
															PRIVATE LANDSCAPING (MINIMIZE DISTURBANCE)		
56-T	MIAMI COUNTY COMMISSIONERS	27, 28	DB 76	127	D08-250035	1.75	0.000	0.032	0.000	0.032	NO				TO COMPLETE GRADING		
	(COURTHOUSE)	29 & 30													PRIVATE LANDSCAPING (DO NOT DISTURB)		
															PRIVATE RETAINING WALL (DO NOT DISTURB)		
															YARD UNDER CONSTRUCTION AS OF 3-20-20		
57-T	P & C VENTURES, LLC	27 & 28	2011OR-11468		D08-001200	0.153	0.000	0.009	0.000	0.009	NO				TO CONSTRUCT PROPOSED WALK		
															CONCRETE STEPS (DO NOT DISTURB)		
															NET TAKE 372 SQUARE FEET		
															PRIVATE SIGN (DO NOT DISTURB)		
58-T	ROOSTER LAND COMPANY, LLC	27 & 28	2019OR-04514		D08-001215	0.209	0.000	0.008	0.000	0.008					TO COMPLETE GRADING		
					D08-001217	0.071	0.000	0.000	0.000	0.000					CONCRETE STEPS (DO NOT DISTURB)		
	TOTAL					0.280	0.000	0.000	0.000	0.008	NO				NET TAKE 329 SQUARE FEET		
															PRIVATE STEPS (DO NOT DISTURB)		
59-T	DL LEGACY, LLC	27, 28	2017OR-00120		D08-001230	0.26	0.000	0.003	0.000	0.003	NO				TO FACE OF BUILDING		
		29 & 30													TO CONSTRUCT PROPOSED WALK		
															NET TAKE 129 SQUARE FEET		
															BUILDING AT R/W (DO NOT DISTURB)		
60	ERWIN PROPERTIES, LTD.	29 & 30	2017OR-00123		D08-001250	0.083					NO				NO TAKE		
															BUILDING AT R/W (DO NOT DISTURB)		
61-T1	BOARD OF COMMISSIONERS	29 & 30	DB 32	477	D08-250040	1.72	0.000	0.024	0.000	0.024	NO				TO CONSTRUCT PROPOSED WALK		
	OF MIAMI COUNTY, OHIO														LANDSCAPING WALL (DO NOT DISTURB)		
															PRIVATE LANDSCAPING (DO NOT DISTURB)		
															PRIVATE LIGHT (DO NOT DISTURB)		
61-T2					D08-250049	0.148	0.000	0.006	0.000	0.006	NO			LOCAL	SAME AS 61-T1		
	TOTAL					1.868	0.000	0.030	0.000	0.030							

LEGEND:
WD = WARRANTY DEED
SH = STANDARD HIGHWAY EASEMENT
SL = SLOPE EASEMENT
CH = CHANNEL EASEMENT
PR = PROPERTY RIGHT
T = TEMPORARY
U = UTILITY EASEMENT

NOTE: ALL TEMPORARY PARCELS TO BE OF 18 MONTH DURATION, UNLESS NOTED OTHERWISE IN REMARKS COLUMN.

NOTE: UNDER NO CIRCUMSTANCES ARE TEMPORARY EASEMENTS TO BE USED FOR STORAGE OF MATERIAL OR EQUIPMENT BY THE CONTRACTOR UNLESS NOTED OTHERWISE.

(c) = CALCULATED AREA

* DENOTES RIGHT OF WAY ENCROACHMENT

REV. BY	DATE	DESCRIPTION

FIELD REVIEW BY DATE:
OWNERSHIP VERIFIED BY DATE:
DATE COMPLETED

FEDERAL PROJECT NO. E190578
PID NO. 108662
STATE JOB NO. 471151
R/W DESIGNER BJO
R/W REVIEWER JCS

SUMMARY OF ADDITIONAL RIGHT OF WAY

MIA-41-9.49

S:\CIN\4300--4399\4354\004\Drawings\CAD\108662\row\sheets\08662RS006.dgn Sheet 12/1/2021 5:05:32 PM CarlR

NET RESIDUE = RECORD AREA - TOTAL PRO - NET TAKE

ALL AREAS IN ACRES

GRANTEE:
ALL RIGHT OF WAY ACQUIRED IN THE NAME OF
THE CITY OF TROY
UNLESS OTHERWISE SHOWN

PARCEL NO.	OWNER	SHEET NO.	OWNERS RECORD BOOK	OWNERS RECORD PAGE	AUDITOR'S PARCEL	RECORD AREA	TOTAL P.R.O.	GROSS TAKE	P.R.O. IN TAKE	NET TAKE	STRUCTURE	NET RESIDUE LEFT	NET RESIDUE RIGHT	TYPE FUND	REMARKS	AS ACQUIRED BOOK	AS ACQUIRED PAGE
62	VEROS, LLC	29 & 30	OR 191	407	D08-001260	0.07					NO			LOCAL	NO TAKE BUILDING AT R/W (DO NOT DISTURB)		
63	116 WEST MAIN LLC	29 & 30	2018OR-02284		D08-001270	0.3					NO				NO TAKE BUILDING AT R/W (DO NOT DISTURB)		
64	CHERYL A. CHEADLE	29 & 30	DB 749	711	D08-005580	0.036					NO				NO TAKE BUILDING AT R/W (DO NOT DISTURB)		
					D08-005590	0.034											
	TOTAL					0.07											
65	NIMER PROPERTIES, LLC	29 & 30	DB 741	176	D08-005600	0.033					NO				NO TAKE BUILDING AT R/W (DO NOT DISTURB)		
66	BOARD OF TRUSTEES, TROY-MIAMI COUNTY PUBLIC LIBRARY	29 & 30	DB 725	737	D08-250197	0.068					NO				NO TAKE BUILDING AT R/W (DO NOT DISTURB)		
67	107 W MAIN LLC	29 & 30	2020OR-02342		D08-001040	0.21					NO				NO TAKE BUILDING AT R/W (DO NOT DISTURB)		
68	PERIPHERY VENTURES LLC	29, 30 31 & 32	2012OR-09937		D08-001020	0.15					NO				NO TAKE BUILDING AT R/W (DO NOT DISTURB)		
69	CITY OF TROY, OHIO	31 & 32	DB 539	717	D08-250166	0.284					NO				NO TAKE		
70	HEATHER M. DAVEY AND ROBERT M. DAVEY	29, 30 31 & 32	2013OR-09741		D08-001290	0.03					NO			LOCAL	NO TAKE BUILDING AT R/W (DO NOT DISTURB)		
					D08-001300	0.03											
					D08-001310	0.03											
					D08-001320	0.04											
					D08-001330	0.07											
					D08-001350	0.07											
	TOTAL					0.27											

LEGEND:
WD = WARRANTY DEED
SH = STANDARD HIGHWAY EASEMENT
SL = SLOPE EASEMENT
CH = CHANNEL EASEMENT
PR = PROPERTY RIGHT
T = TEMPORARY
U = UTILITY EASEMENT

NOTE: ALL TEMPORARY PARCELS TO BE OF 18 MONTH DURATION, UNLESS NOTED OTHERWISE IN REMARKS COLUMN.

NOTE: UNDER NO CIRCUMSTANCES ARE TEMPORARY EASEMENTS TO BE USED FOR STORAGE OF MATERIAL OR EQUIPMENT BY THE CONTRACTOR UNLESS NOTED OTHERWISE.

(c) = CALCULATED AREA

* DENOTES RIGHT OF WAY ENCROACHMENT

REV. BY	DATE	DESCRIPTION

FIELD REVIEW BY DATE:
OWNERSHIP VERIFIED BY DATE:
DATE COMPLETED

FEDERAL PROJECT NO. E190578
PID NO. 108662
STATE JOB NO. 471151
R/W DESIGNER BJO
R/W REVIEWER JCS

SUMMARY OF ADDITIONAL RIGHT OF WAY

MIA-41-9.49

S:\CIN\4300--4399\4354\004\Drawings\CAD\108662\row\sheets\08662RS007.dgn Sheet 12/1/2021 5:05:32 PM CarlR

NET RESIDUE = RECORD AREA - TOTAL PRO - NET TAKE

ALL AREAS IN ACRES

GRANTEE:
ALL RIGHT OF WAY ACQUIRED IN THE NAME OF
THE CITY OF TROY
UNLESS OTHERWISE SHOWN

PARCEL NO.	OWNER	SHEET NO.	OWNERS RECORD BOOK	OWNERS RECORD PAGE	AUDITOR'S PARCEL	RECORD AREA	TOTAL P.R.O.	GROSS TAKE	P.R.O. IN TAKE	NET TAKE	STRUC-TURE	NET RESIDUE LEFT	NET RESIDUE RIGHT	TYPE FUND	REMARKS	AS ACQUIRED BOOK	AS ACQUIRED PAGE
71-U	R.C. HEMM INVESTMENTS LLC	12C & 12D	2020-02600		D08-102044	0.5575	0.000	0.029	0.000	0.029	NO			LOCAL	FOR OVERHEAD ELECTRIC UTILITY SAME AS PARCEL 67 FOR PROJECT MIA-41-10.32 (PID 110253)		

LEGEND:
WD = WARRANTY DEED
SH = STANDARD HIGHWAY EASEMENT
SL = SLOPE EASEMENT
CH = CHANNEL EASEMENT
PR = PROPERTY RIGHT
T = TEMPORARY
U = UTILITY EASEMENT

NOTE: ALL TEMPORARY PARCELS TO BE OF 18 MONTH DURATION, UNLESS NOTED OTHERWISE IN REMARKS COLUMN.

NOTE: UNDER NO CIRCUMSTANCES ARE TEMPORARY EASEMENTS TO BE USED FOR STORAGE OF MATERIAL OR EQUIPMENT BY THE CONTRACTOR UNLESS NOTED OTHERWISE.

(c) = CALCULATED AREA

* DENOTES RIGHT OF WAY ENCROACHMENT

REV. BY	DATE	DESCRIPTION

FIELD REVIEW BY DATE:
OWNERSHIP VERIFIED BY DATE:
DATE COMPLETED

FEDERAL PROJECT NO. E190578
PID NO. 108662
STATE JOB NO. 471151
R/W DESIGNER BJO
R/W REVIEWER JCS

SUMMARY OF ADDITIONAL RIGHT OF WAY

MIA-41-9.49

12B/32

202A/222

S:\CIN\4300--4399\4354\004\Drawings\CAD\108662\row\sheets\08662RS008.dgn Sheet 12/1/2021 5:05:32 PM CarlR

MIAMI COUNTY
CONCORD TOWNSHIP
CITY OF TROY
SEC. 21 & 28, T. 5 N., R. 6 E.
CONGRESS LANDS WEST OF THE MIAMI RIVER

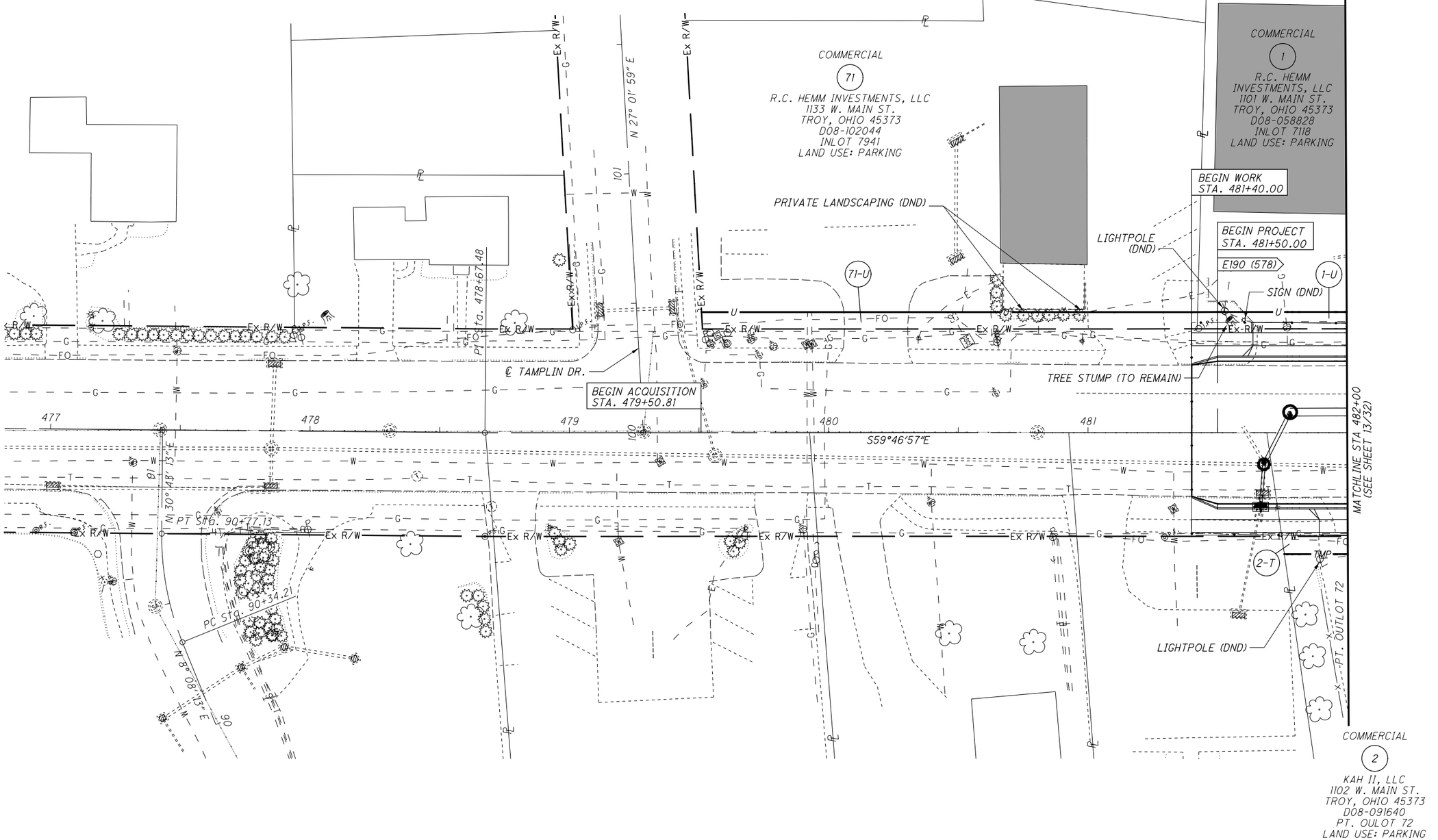

SUBDIVISIONS:

PLAT OF THE CITY OF TROY
OUTLOTS: 70
INLOTS: 7941

REV. BY	DATE	DESCRIPTION

DATE COMPLETED

HORIZONTAL SCALE IN FEET
0 10 20 40

PID NO. 108662

R/W DESIGNER BJO
R/W REVIEWER JCS

RIGHT OF WAY TOPO SHEET
STA 482+00 TO STA 487+00

MIA-41-9.49

12C/32

202B/222

S:\CIN\4300--4399\4354\004\Drawings\CAD\108662\row\sheets\08662RT000.dgn Sheet 12/1/2021 5:05:34 PM CarlR

MIAMI COUNTY
CONCORD TOWNSHIP
CITY OF TROY
SEC. 21 & 28, T. 5 N., R. 6 E.
CONGRESS LANDS WEST OF THE MIAMI RIVER

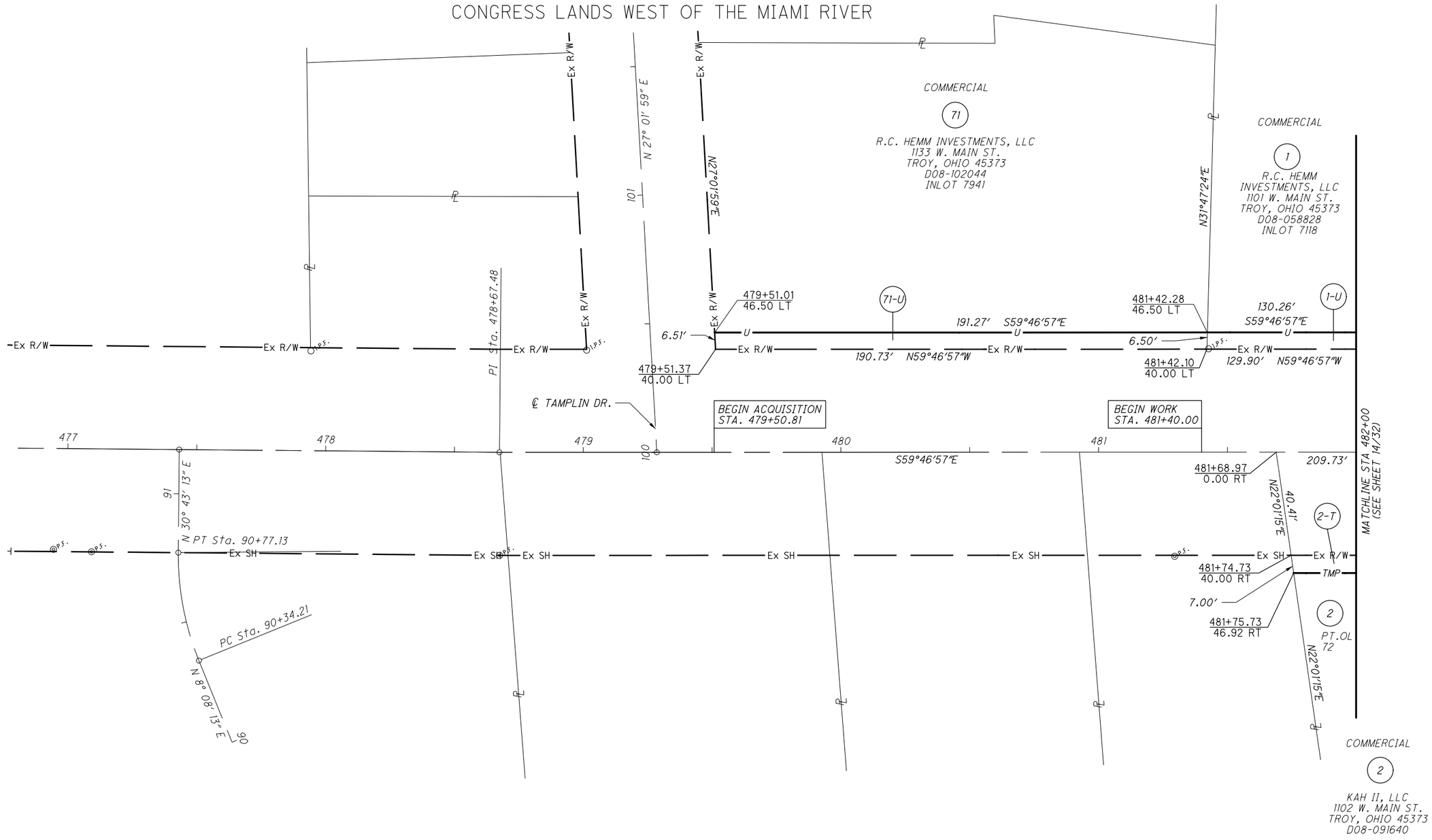

SUBDIVISIONS:

PLAT OF THE CITY OF TROY
OUTLOTS: 70
INLOTS: 7941

REV. BY	DATE	DESCRIPTION

DATE COMPLETED

HORIZONTAL SCALE IN FEET 0 10 20 40

PID NO. 108662

R/W DESIGNER BJO
R/W REVIEWER JCS

RIGHT OF WAY BOUNDARY SHEET
STA 482+00 TO STA 487+00

MIA-41-9.49

12D/32

202C/222

S:\CIN\4300--4399\4354\004\Drawings\CAD\108662\row\sheets\08662RB000.dgn Sheet 12/1/2021 5:05:36 PM CarlR

MIAMI COUNTY
CONCORD TOWNSHIP
CITY OF TROY
SEC. 21 & 28, T. 5 N., R. 6 E.
CONGRESS LANDS WEST OF THE MIAMI RIVER

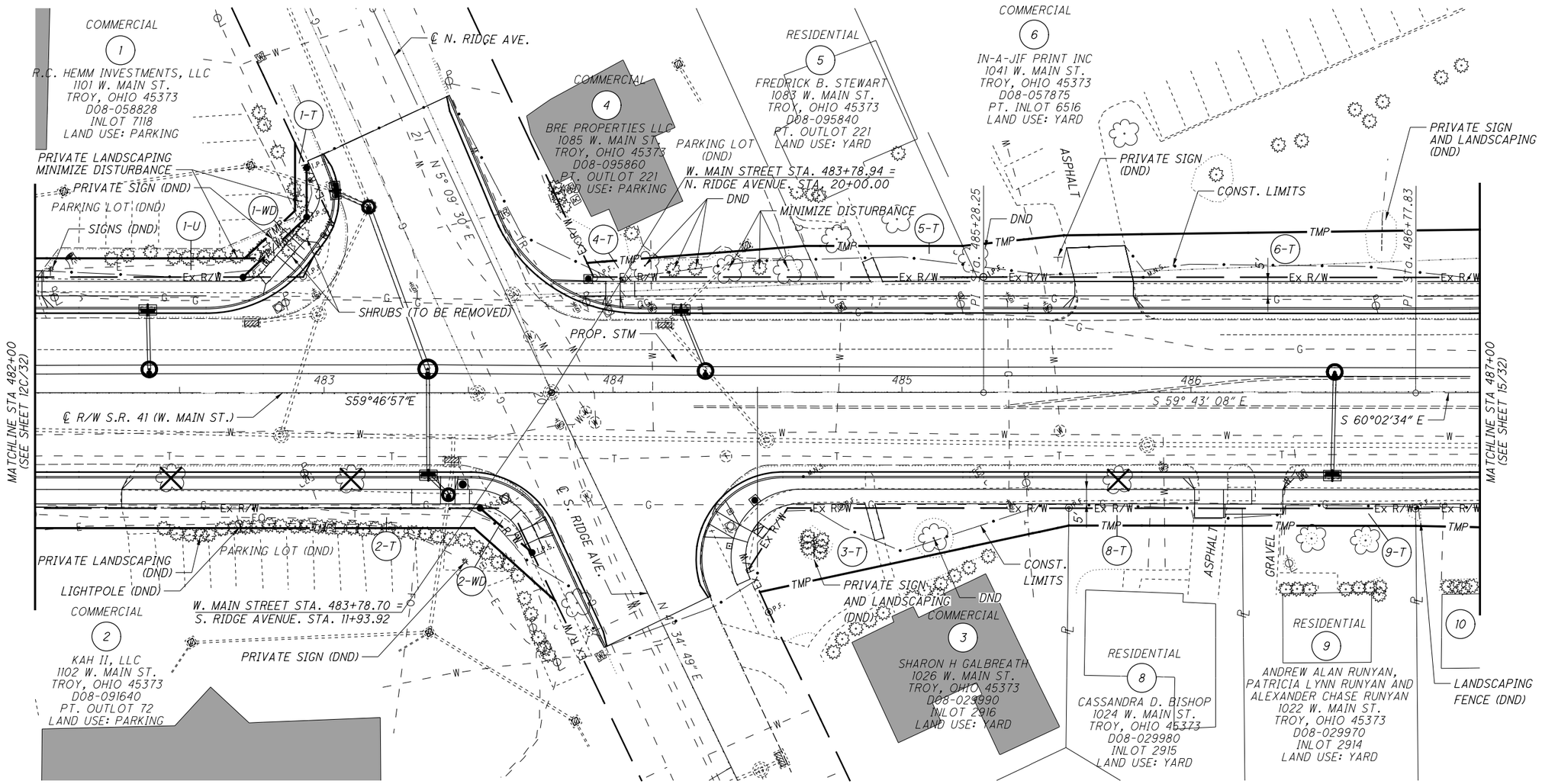

SUBDIVISIONS:

EDGEHILL SUBDIVISION, PLAT BOOK 4, PAGE 51

PLAT OF THE CITY OF TROY
OUTLOTS: 70, 72, 221
INLOTS: 6516

REV. BY	DATE	DESCRIPTION

DATE COMPLETED

HORIZONTAL SCALE IN FEET 0 10 20 40

PID NO. 108662

R/W DESIGNER BJO
R/W REVIEWER JCS

RIGHT OF WAY TOPO SHEET
STA 482+00 TO STA 487+00

MIA-41-9.49

S:\CIN\4300--4399\4354\004\Drawings\CAD\108662\row\sheets\08662RT001.dgn Sheet 12/1/2021 5:05:37 PM CarlR

MIAMI COUNTY
CONCORD TOWNSHIP
CITY OF TROY
SEC. 21 & 28, T. 5 N., R. 6 E.
CONGRESS LANDS WEST OF THE MIAMI RIVER

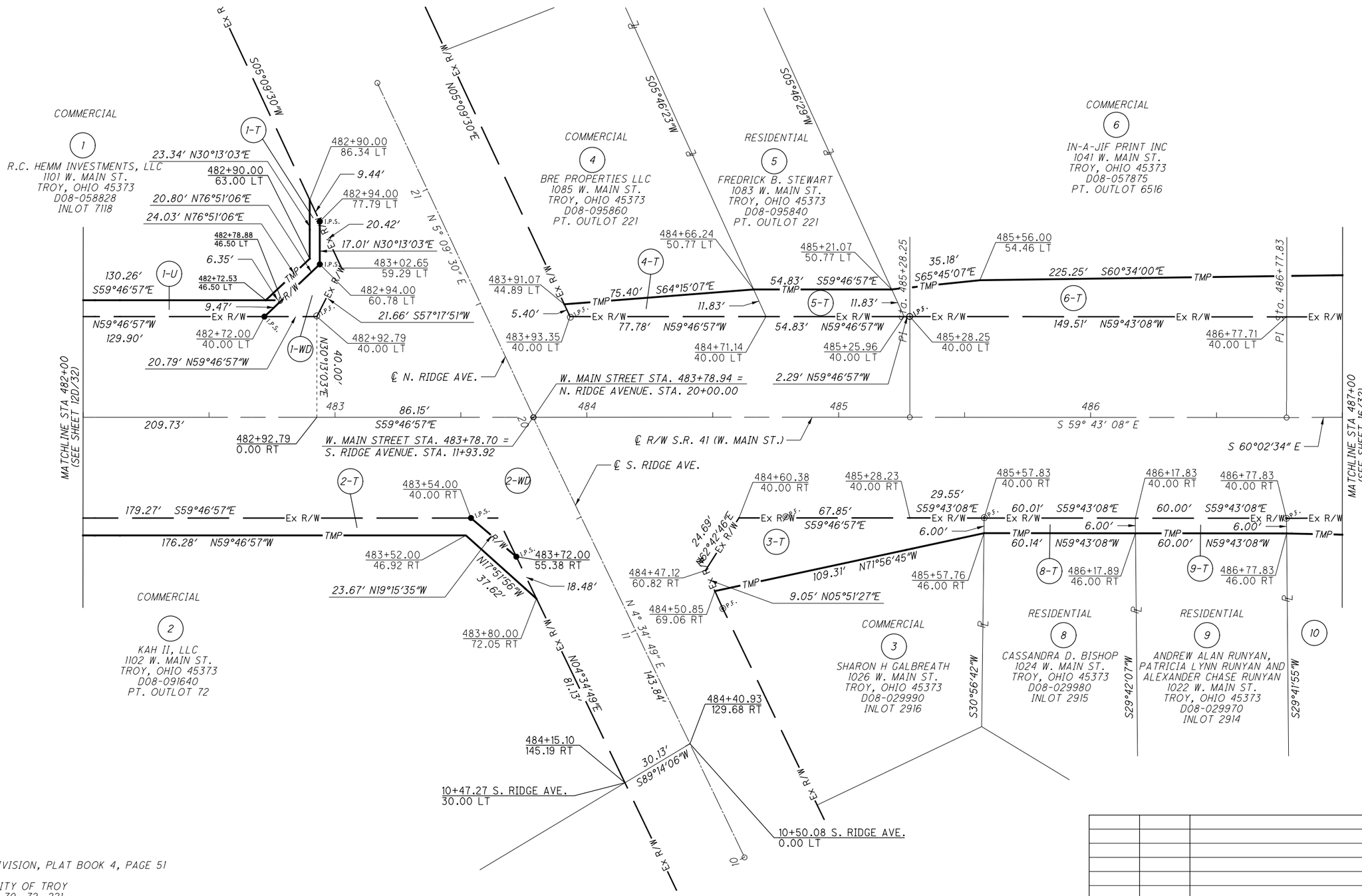

SUBDIVISIONS:

EDGEHILL SUBDIVISION, PLAT BOOK 4, PAGE 51

PLAT OF THE CITY OF TROY
OUTLOTS: 70, 72, 221
INLOTS: 6516

REV. BY	DATE	DESCRIPTION

DATE COMPLETED

HORIZONTAL SCALE IN FEET 0 10 20 40

PID NO. 108662

R/W DESIGNER BJO
R/W REVIEWER JCS

RIGHT OF WAY BOUNDARY SHEET
STA 482+00 TO STA 487+00

MIA-41-9.49

S:\CIN\4300-4399\4354\004\Drawings\CAD\108662\row\sheets\08662RB001.dgn Sheet 12/1/2021 5:05:38 PM CarlR

MIAMI COUNTY
CONCORD TOWNSHIP
CITY OF TROY
SEC. 21 & 28, T. 5 N., R. 6 E.
CONGRESS LANDS WEST OF THE MIAMI RIVER

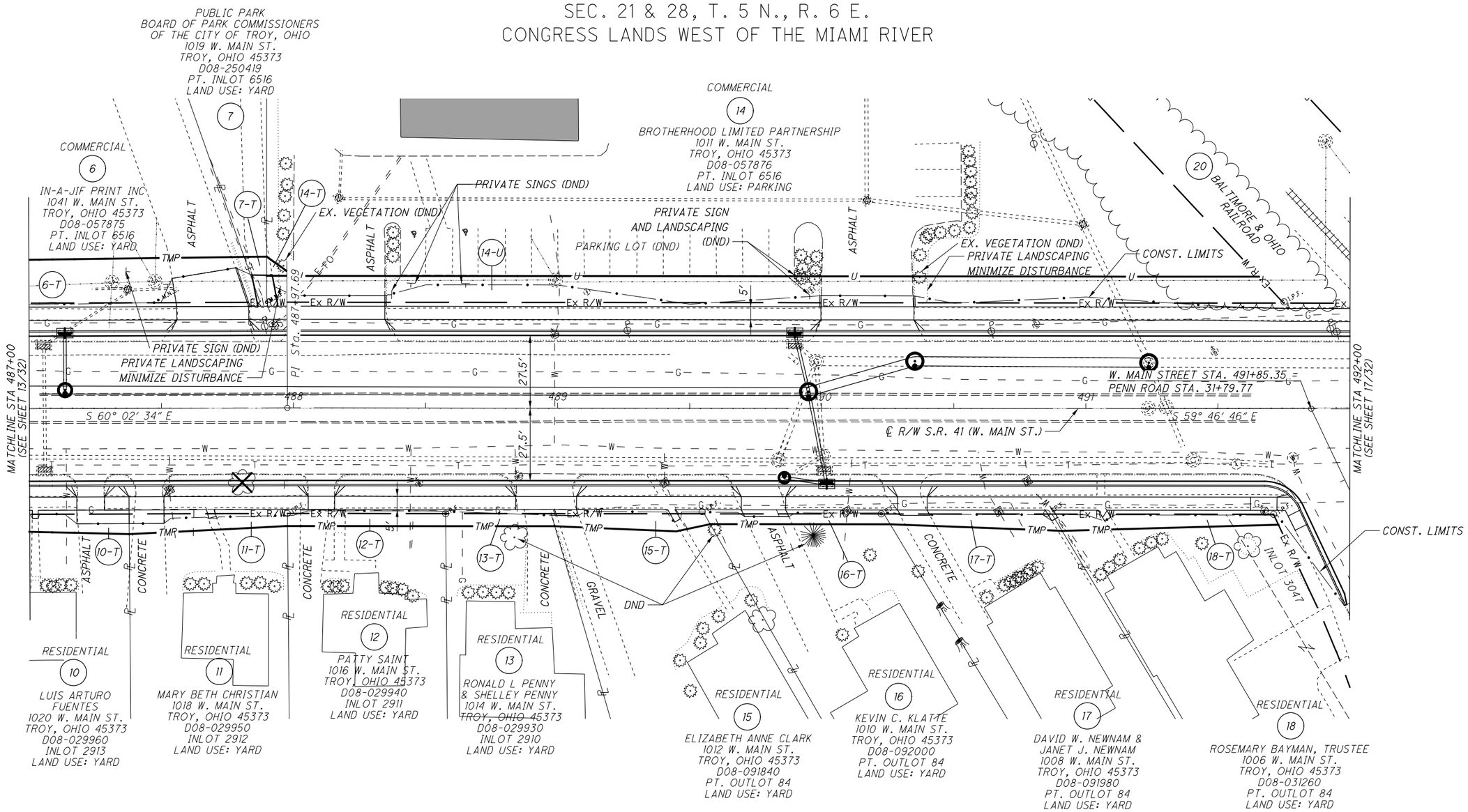

SUBDIVISIONS:

EDGEHILL SUBDIVISION, PLAT BOOK 4, PAGE 51

PLAT OF THE CITY OF TROY
OUTLOTS: 80, 84
INLOTS: 6516

REV. BY	DATE	DESCRIPTION

DATE COMPLETED

HORIZONTAL SCALE IN FEET 0 10 20 40

PID NO. 108662

R/W DESIGNER BJO
R/W REVIEWER JCS

RIGHT OF WAY TOPO SHEET
STA 487+00 TO STA 492+00

MIA-41-9.49

15/32

205/222

S:\CIN\4300--4399\4354\004\Drawings\CAD\108662\row\sheets\108662RT002.dgn Sheet 12/1/2021 5:05:39 PM CarlR

MIAMI COUNTY
CONCORD TOWNSHIP
CITY OF TROY
SEC. 21 & 28, T. 5 N., R. 6 E.
CONGRESS LANDS WEST OF THE MIAMI RIVER

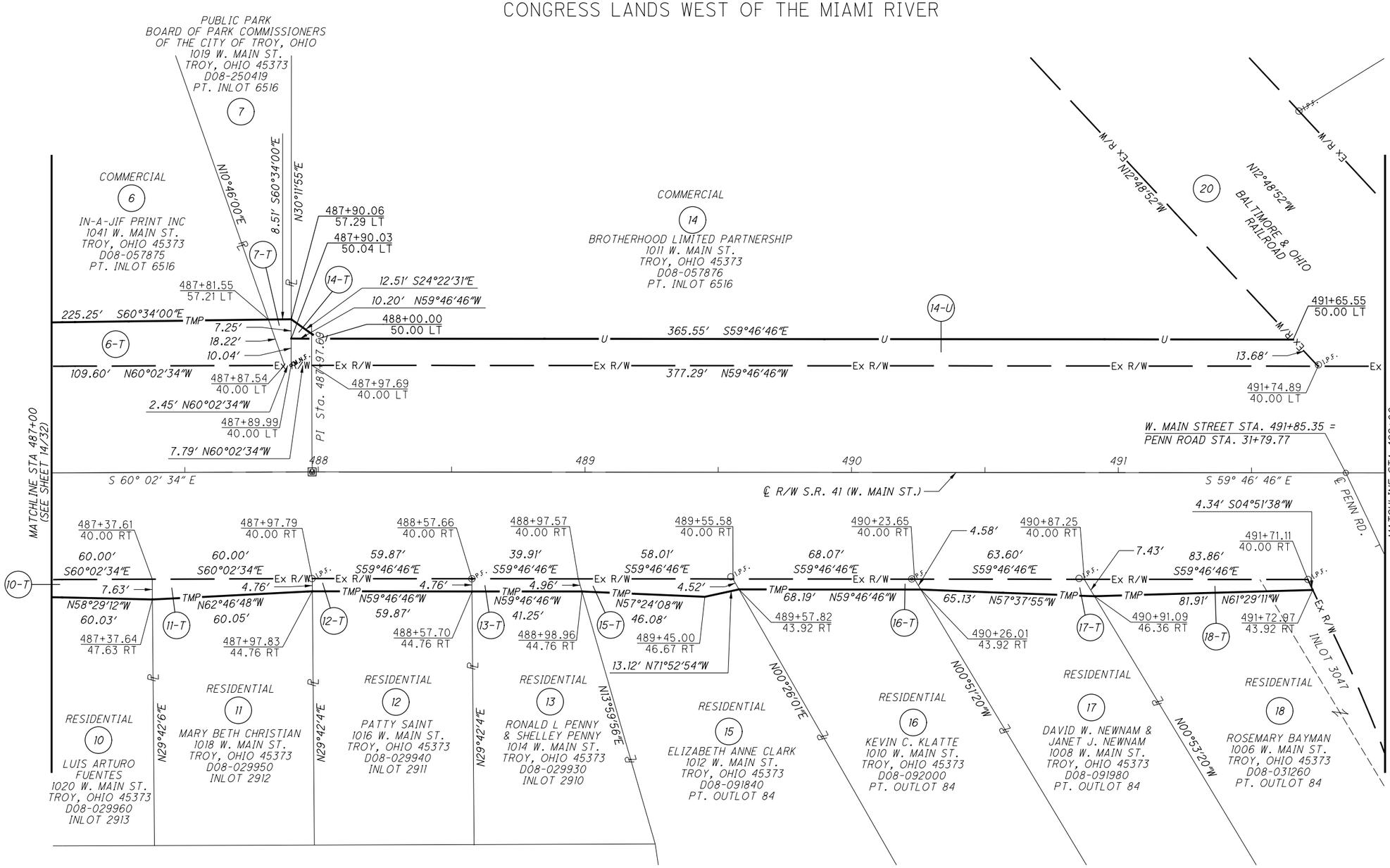

SUBDIVISIONS:

EDGEHILL SUBDIVISION, PLAT BOOK 4, PAGE 51

PLAT OF THE CITY OF TROY
OUTLOTS: 80, 84
INLOTS: 6516

REV. BY	DATE	DESCRIPTION

DATE COMPLETED

HORIZONTAL SCALE IN FEET 0 10 20 40

PID NO. 108662

R/W DESIGNER BJO
R/W REVIEWER JCS

RIGHT OF WAY BOUNDARY SHEET
STA 487+00 TO STA 492+00

MIA-41-9.49

S:\CIN\4300--4399\4354\004\Drawings\CAD\108662\row\sheets\08662RB002.dgn Sheet 12/1/2021 5:05:40 PM CarlR

MIAMI COUNTY
CONCORD TOWNSHIP
CITY OF TROY
SEC. 21 & 28, T. 5 N., R. 6 E.
CONGRESS LANDS WEST OF THE MIAMI RIVER

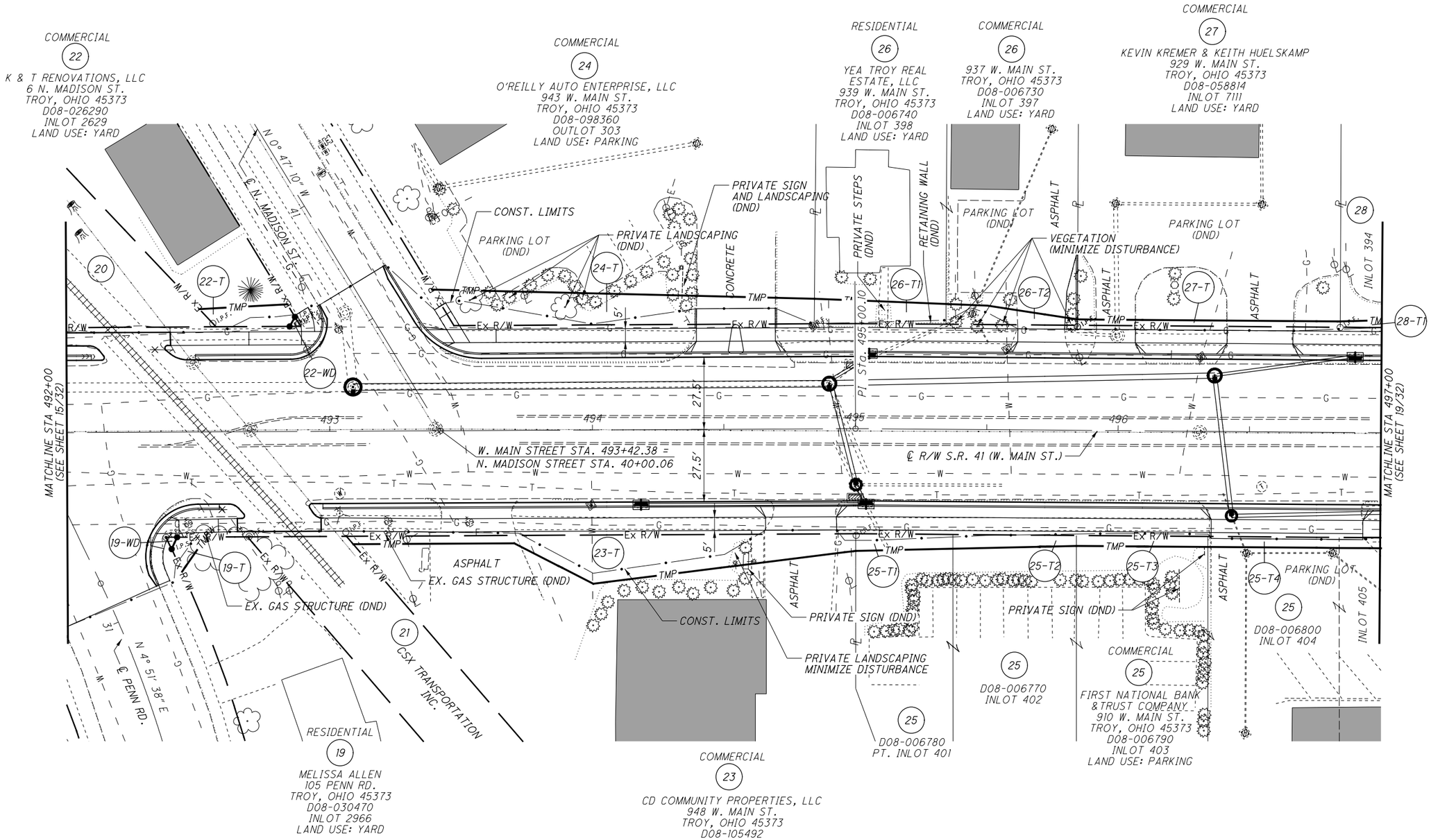

SUBDIVISIONS:

EDGEHILL SUBDIVISION, PLAT BOOK 4, PAGE 51

PLAT OF THE CITY OF TROY
OUTLOTS: 303
INLOTS: 394, 397-398, 401-405, 2629-2632, 7111, 9941

REV. BY	DATE	DESCRIPTION

DATE COMPLETED

HORIZONTAL SCALE IN FEET 0 10 20 40

PID NO. 108662

R/W DESIGNER BJO
R/W REVIEWER JCS

RIGHT OF WAY TOPO SHEET
STA 492+00 TO STA 497+00

MIA-41-9.49

S:\CIN\4300--4399\4354\004\Drawings\CAD\108662\row\sheets\08662RT003.dgn Sheet 12/1/2021 5:05:41 PM CarlR

MIAMI COUNTY
CONCORD TOWNSHIP
CITY OF TROY
SEC. 21 & 28, T. 5 N., R. 6 E.
CONGRESS LANDS WEST OF THE MIAMI RIVER

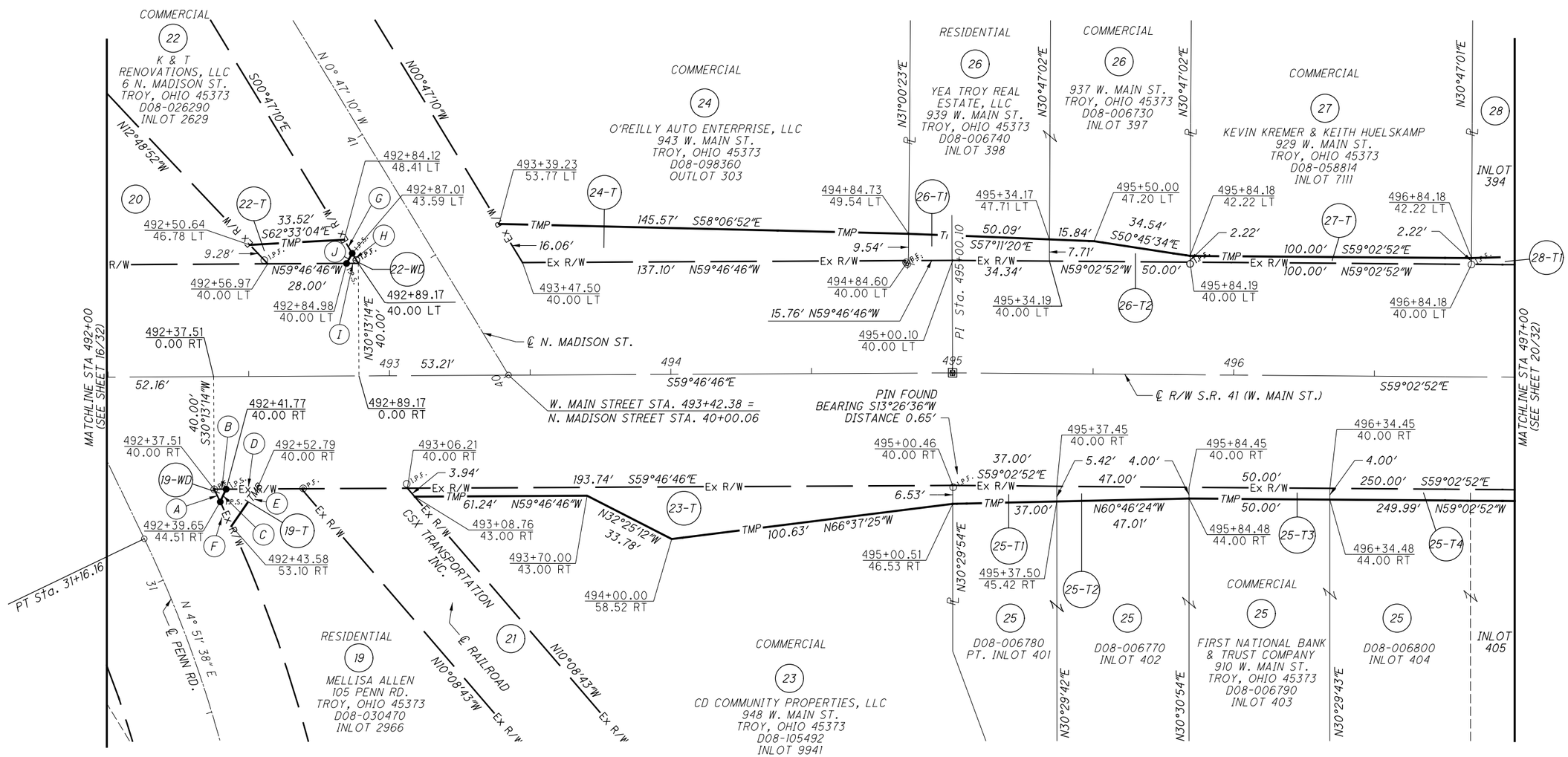

	BEARING	DISTANCE
A	N04°51'38"E	4.99'
B	S59°46'46"E	4.26'
C	S55°25'36"W	4.99'
D	S59°46'46"E	11.02'
E	S65°19'49"W	16.02'
F	N05°37'10"E	9.44'
G	S00°47'10"E	5.62'
H	S00°47'10"E	4.19'
I	N59°46'46"W	4.19'
J	N59°43'02"E	4.13'

SUBDIVISIONS:

EDGEHILL SUBDIVISION, PLAT BOOK 4, PAGE 51

PLAT OF THE CITY OF TROY
OUTLOTS: 303
INLOTS: 394, 397-398, 401-405, 2629-2632, 7111, 9941

REV. BY	DATE	DESCRIPTION

DATE COMPLETED

HORIZONTAL SCALE IN FEET 0 10 20 40

PID NO. 108662

R/W DESIGNER BJO
R/W REVIEWER JCS

RIGHT OF WAY BOUNDARY SHEET
STA 492+00 TO STA 497+00

MIA-41-9.49

S:\CIN\4300--4399\4354\004\Drawings\CAD\108662\row\sheets\08662RB003.dgn Sheet 12/1/2021 5:05:42 PM CarlR

MIAMI COUNTY
CONCORD TOWNSHIP
CITY OF TROY
SEC. 21 & 28, T. 5 N., R. 6 E.
CONGRESS LANDS WEST OF THE MIAMI RIVER

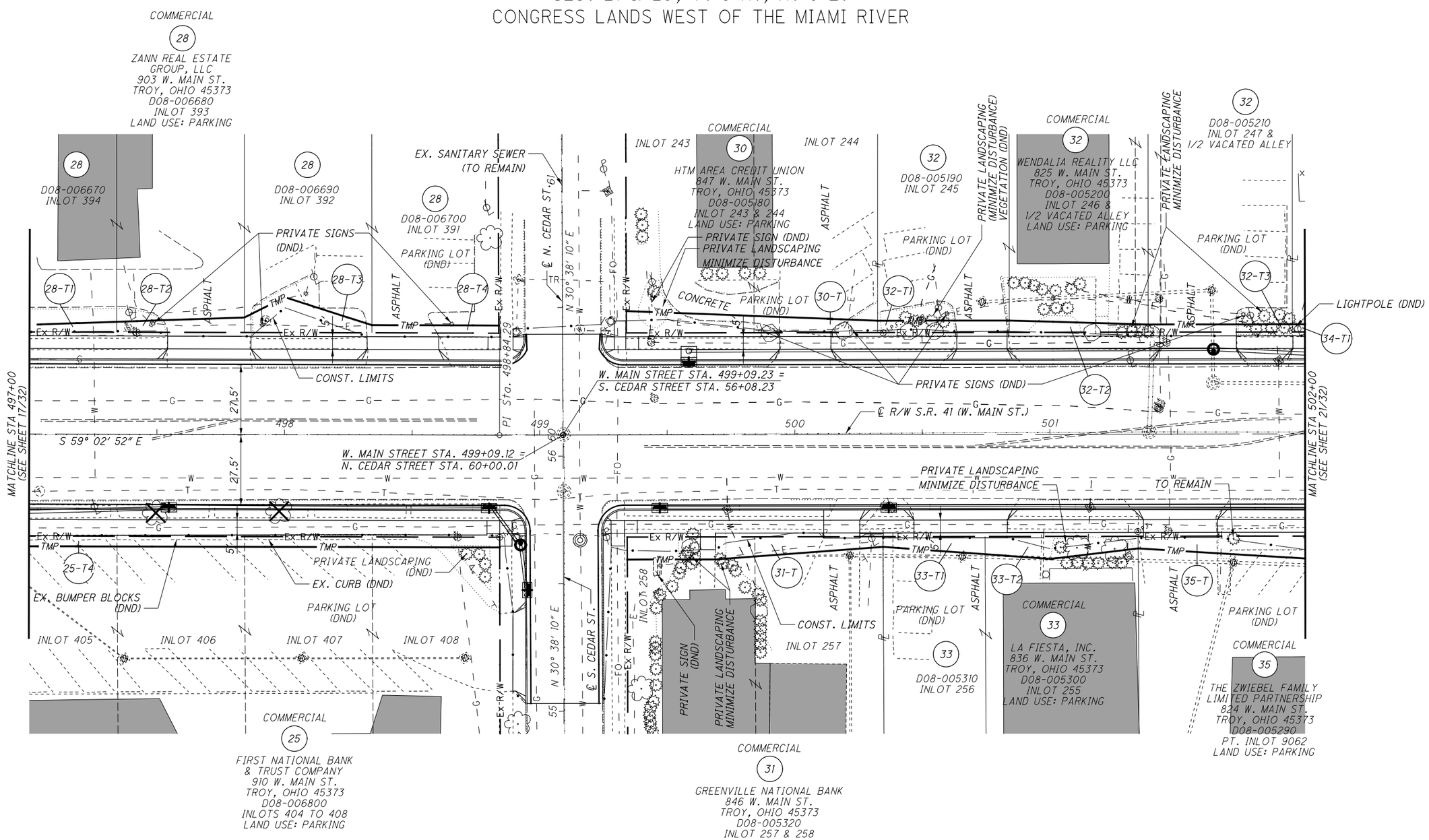

SUBDIVISIONS:

PLAT OF THE CITY OF TROY
INLOTS: 243-247, 255-258, 391-394, 405-408, 9062

REV. BY	DATE	DESCRIPTION

DATE COMPLETED

HORIZONTAL SCALE IN FEET 0 10 20 40

PID NO. 108662

R/W DESIGNER BJO
R/W REVIEWER JCS

RIGHT OF WAY TOPO SHEET
STA 497+00 TO STA 502+00

MIA-41-9.49

S:\CIN\4300--4399\4354\004\Drawings\CAD\108662\row\sheets\08662RT004.dgn Sheet 12/1/2021 5:05:43 PM CarlR

MIAMI COUNTY
CONCORD TOWNSHIP
CITY OF TROY
SEC. 21 & 28, T. 5 N., R. 6 E.
CONGRESS LANDS WEST OF THE MIAMI RIVER

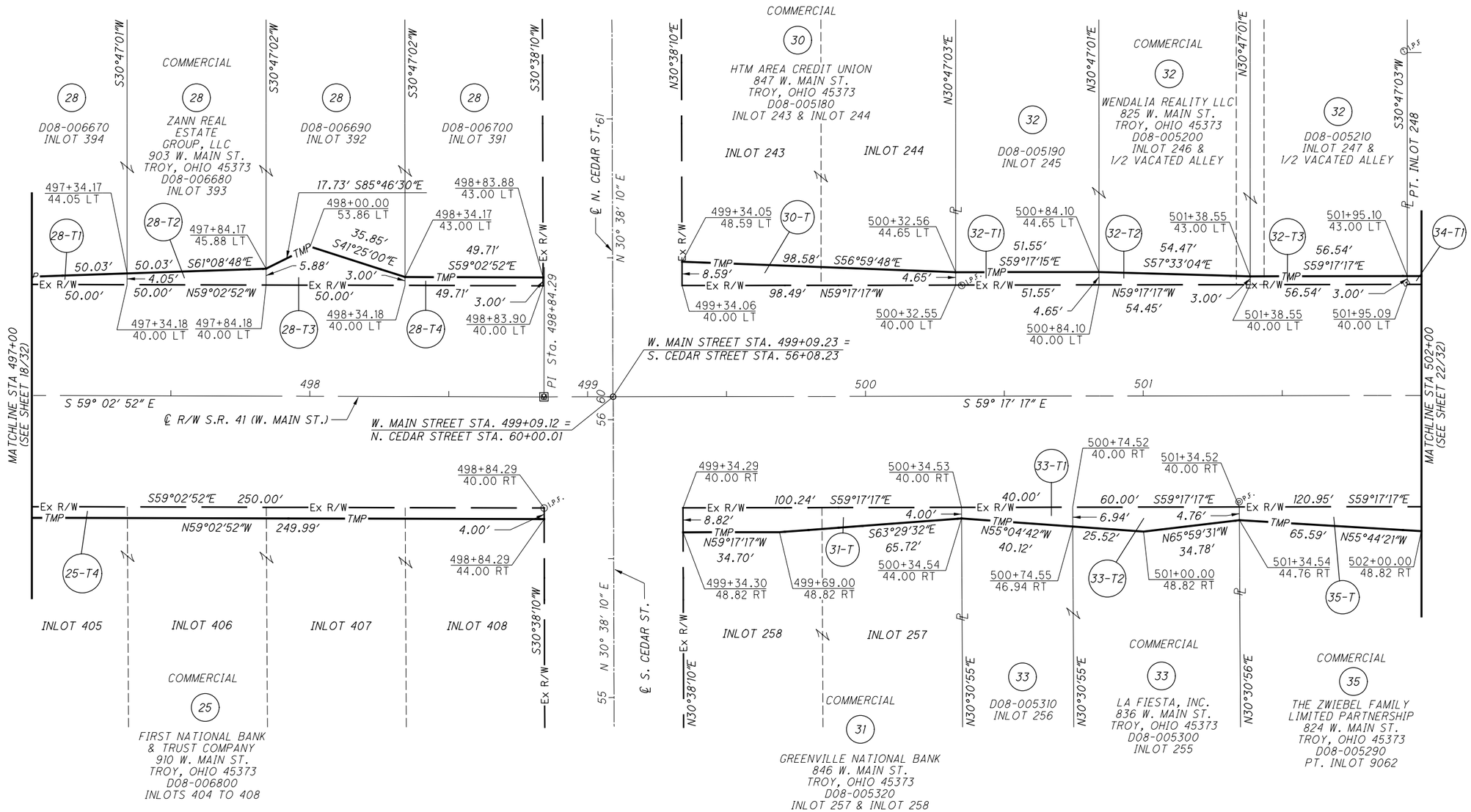

SUBDIVISIONS:

PLAT OF THE CITY OF TROY
INLOTS: 243-247, 255-258, 391-394, 405-408, 9062

REV. BY	DATE	DESCRIPTION

DATE COMPLETED

HORIZONTAL SCALE IN FEET 0 10 20 40

PID NO. 108662

R/W DESIGNER BJO
R/W REVIEWER JCS

RIGHT OF WAY BOUNDARY SHEET
STA 497+00 TO STA 502+00

MIA-41-9.49

S:\CIN\4300--4399\4354\004\Drawings\CAD\108662\row\sheets\08662RB004.dgn Sheet 12/1/2021 5:05:45 PM CarlR

MIAMI COUNTY
CONCORD TOWNSHIP
CITY OF TROY
SEC. 21 & 28, T. 5 N., R. 6 E.
CONGRESS LANDS WEST OF THE MIAMI RIVER

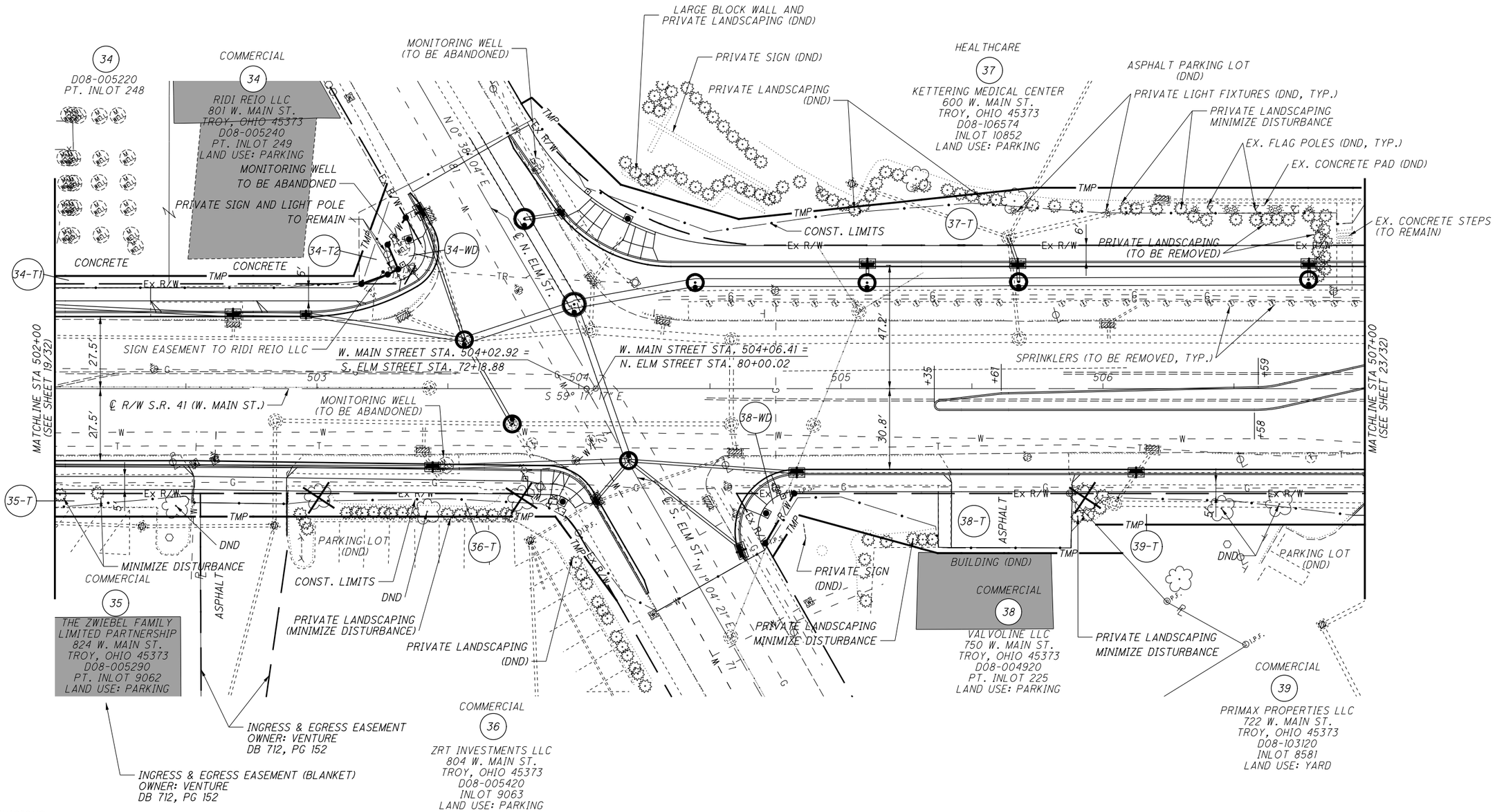

SUBDIVISIONS:

TROY MEDICAL CENTER PLAT OF SUBDIVISION
DOCUMENT NUMBER 2018P-00004
VOLUME 26, PAGE 89

PLAT OF THE CITY OF TROY
INLOTS: 223-225, 248-249, 8581, 9062-9063

REV. BY	DATE	DESCRIPTION

DATE COMPLETED

HORIZONTAL SCALE IN FEET 0 10 20 40

PID NO. 108662

R/W DESIGNER BJO
R/W REVIEWER JCS

RIGHT OF WAY TOPO SHEET
STA 502+00 TO STA 507+00

MIA-41-9.49

S:\CIN\4300--4399\4354\004\Drawings\CAD\108662\row\sheets\08662RT005.dgn Sheet 12/1/2021 5:05:45 PM CarlR

MIAMI COUNTY
CONCORD TOWNSHIP
CITY OF TROY
SEC. 21 & 28, T. 5 N., R. 6 E.
CONGRESS LANDS WEST OF THE MIAMI RIVER

	BEARING	DISTANCE
A	S79°05'11"E	10.63'
B	S85°48'02"E	4.47'
C	N07°35'48"E	10.19'
D	N64°27'43"E	12.44'

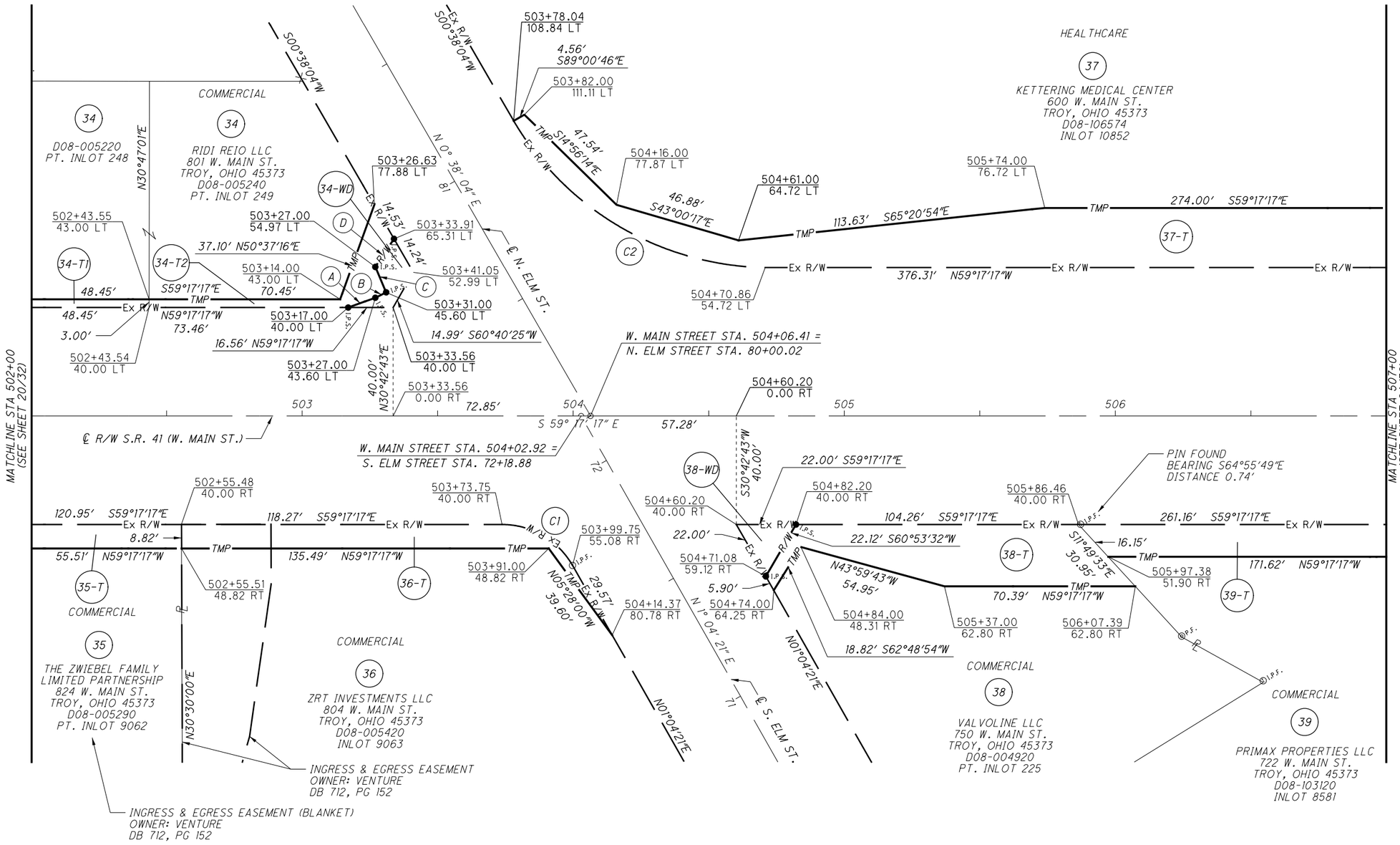

CURVE	CENTRAL ANGLE	RADIUS	CURVE LENGTH	CHORD LENGTH	CHORD BEARING
C1 (36-T)	60°07'37"	30.00'	31.48'	30.06'	S29°10'40"E
C2 (37-T)	58°28'17"	110.00'	112.26'	107.45'	N29°02'37"W

SUBDIVISIONS:

TROY MEDICAL CENTER PLAT OF SUBDIVISION
DOCUMENT NUMBER 2018P-00004
VOLUME 26, PAGE 89

PLAT OF THE CITY OF TROY
INLOTS: 223-225, 248-249, 8581, 9062-9063

REV. BY	DATE	DESCRIPTION

DATE COMPLETED

HORIZONTAL SCALE IN FEET 0 10 20 40

PID NO. 108662

R/W DESIGNER BJO
R/W REVIEWER JCS

RIGHT OF WAY BOUNDARY SHEET
STA 502+00 TO STA 507+00

MIA-41-9.49

S:\CIN\4300--4399\4354\004\Drawings\CAD\108662\row\sheets\08662RB005.dgn Sheet 12/1/2021 5:05:47 PM CarlR

MIAMI COUNTY
CONCORD TOWNSHIP
CITY OF TROY
SEC. 21 & 28, T. 5 N., R. 6 E.
CONGRESS LANDS WEST OF THE MIAMI RIVER

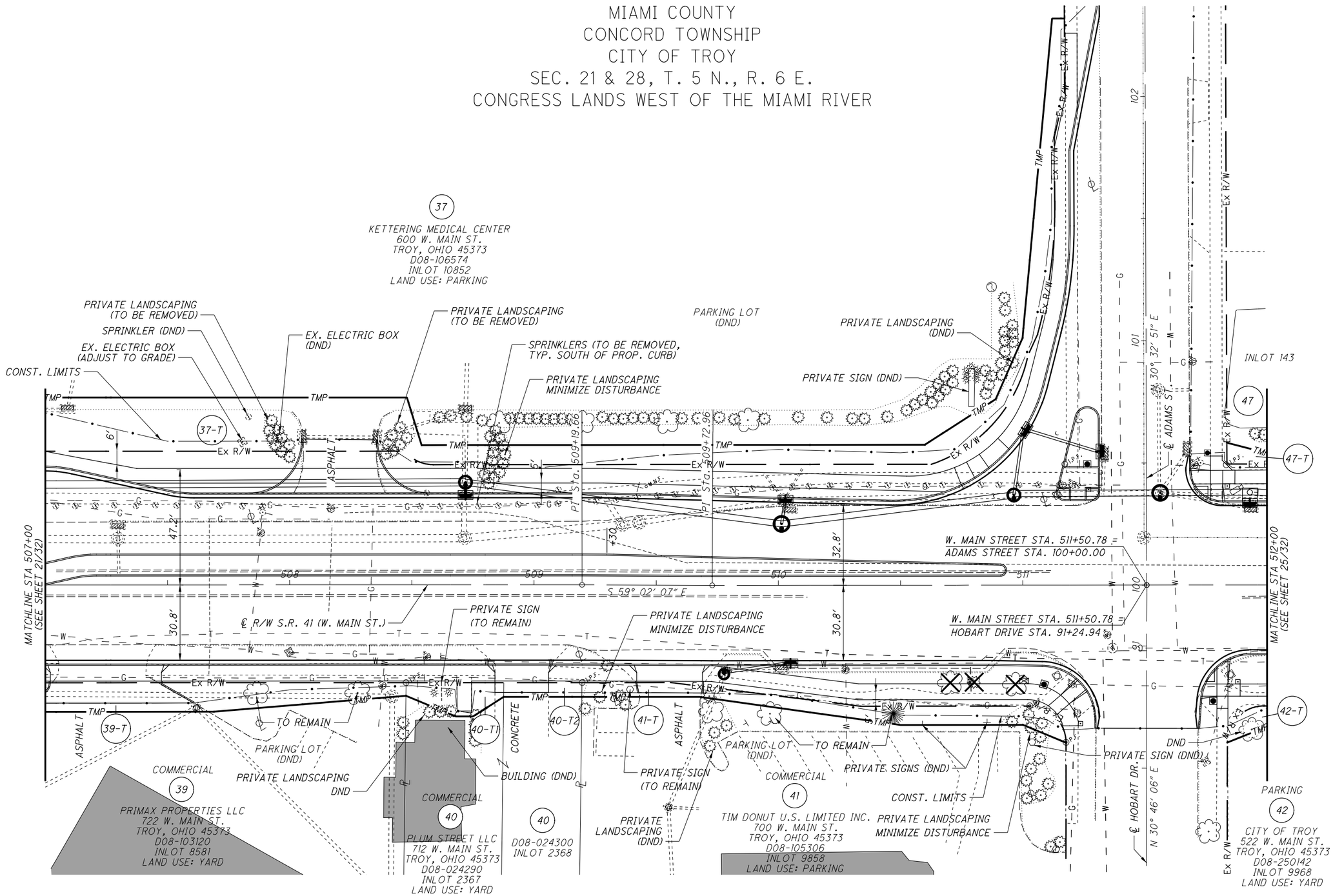

SUBDIVISIONS:

TROY MEDICAL CENTER PLAT OF SUBDIVISION
DOCUMENT NUMBER 2018P-00004
VOLUME 26, PAGE 89

PLAT OF THE CITY OF TROY
INLOTS: 143, 2367-2368, 8581, 9858, 9968

REV. BY	DATE	DESCRIPTION

DATE COMPLETED

HORIZONTAL SCALE IN FEET 0 10 20 40

PID NO. 108662

R/W DESIGNER BJO
R/W REVIEWER JCS

RIGHT OF WAY TOPO SHEET
STA 507+00 TO STA 512+00

MIA-41-9.49

S:\CIN\4300--4399\4354\004\Drawings\CAD\108662\row\sheets\08662RT006.dgn Sheet 12/1/2021 5:05:47 PM CarlR

SUBDIVISIONS:

TROY MEDICAL CENTER PLAT OF SUBDIVISION
DOCUMENT NUMBER 2018P-00004
VOLUME 26, PAGE 89

PLAT OF THE CITY OF TROY
INLOTS: 143, 2367-2368, 8581, 9858, 9968

MIAMI COUNTY
CONCORD TOWNSHIP
CITY OF TROY
SEC. 21 & 28, T. 5 N., R. 6 E.
CONGRESS LANDS WEST OF THE MIAMI RIVER

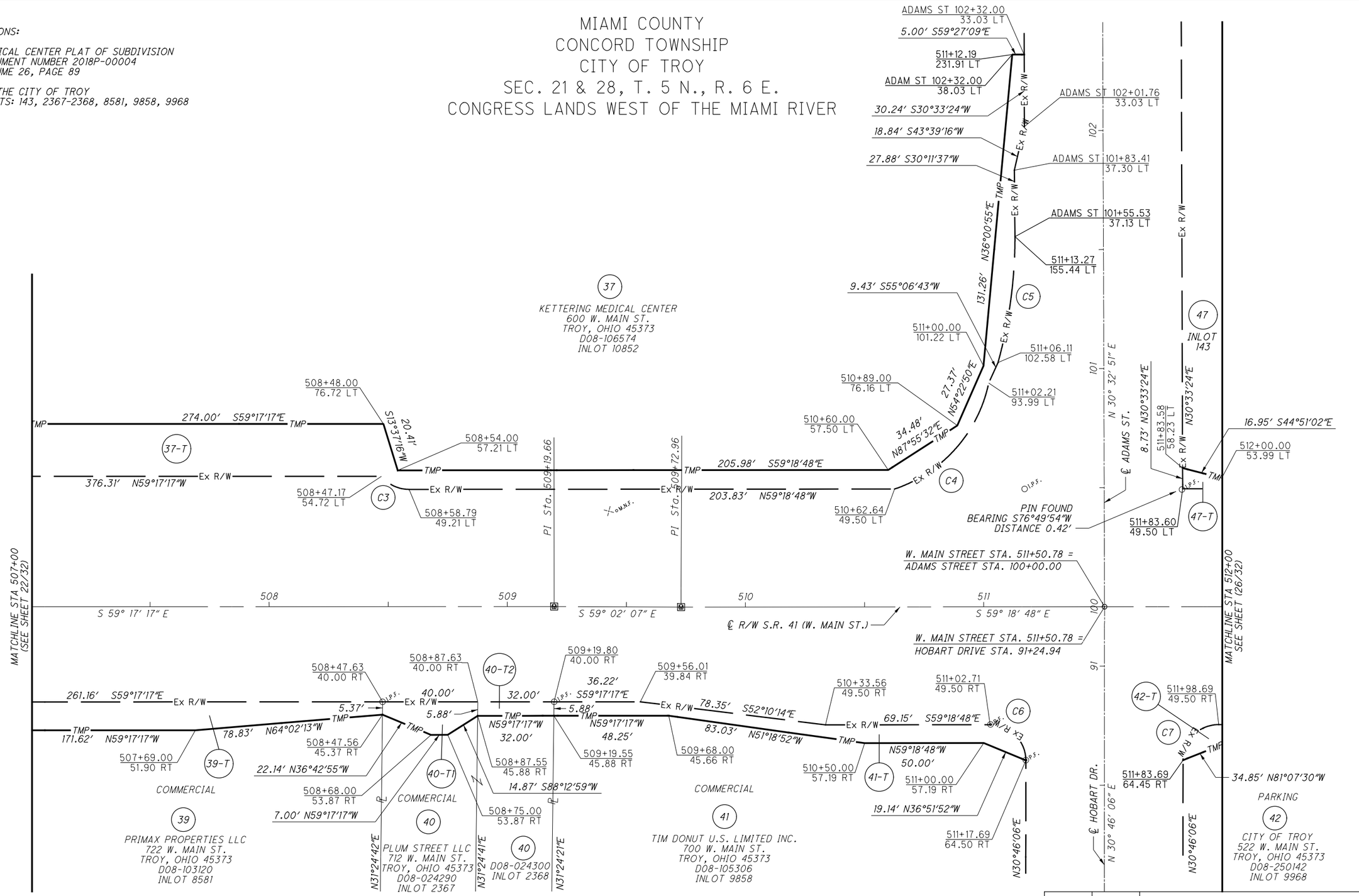

CURVE	CENTRAL ANGLE	RADIUS	CURVE LENGTH	CHORD LENGTH	CHORD BEARING
C3 (37-T)	50°46'01"	15.00'	13.29'	12.86'	N33°55'47"W
C4 (37-T)	59°29'32"	60.00'	62.30'	59.54'	S72°20'25"W
C5 (37-T)	15°26'45"	198.50'	53.51'	53.35'	S38°23'43"W
C6 (41-T)	89°54'20"	15.00'	23.54'	21.20'	S14°16'08"E
C7 (42-T)	89°47'26"	15.00'	23.51'	21.18'	N75°47'32"E

REV. BY	DATE	DESCRIPTION

DATE COMPLETED

HORIZONTAL SCALE IN FEET 0 10 20 40

PID NO. 108662

R/W DESIGNER BJO
R/W REVIEWER JCS

RIGHT OF WAY BOUNDARY SHEET
STA 507+00 TO STA 512+00

MIA-41-9.49

S:\CIN\4300--4399\4354\004\Drawings\CAD\108662\row\sheets\08662RB006.dgn Sheet 12/1/2021 5:05:49 PM CarlR

MIAMI COUNTY
CONCORD TOWNSHIP
CITY OF TROY
SEC. 21 & 28, T. 5 N., R. 6 E.
CONGRESS LANDS WEST OF THE MIAMI RIVER

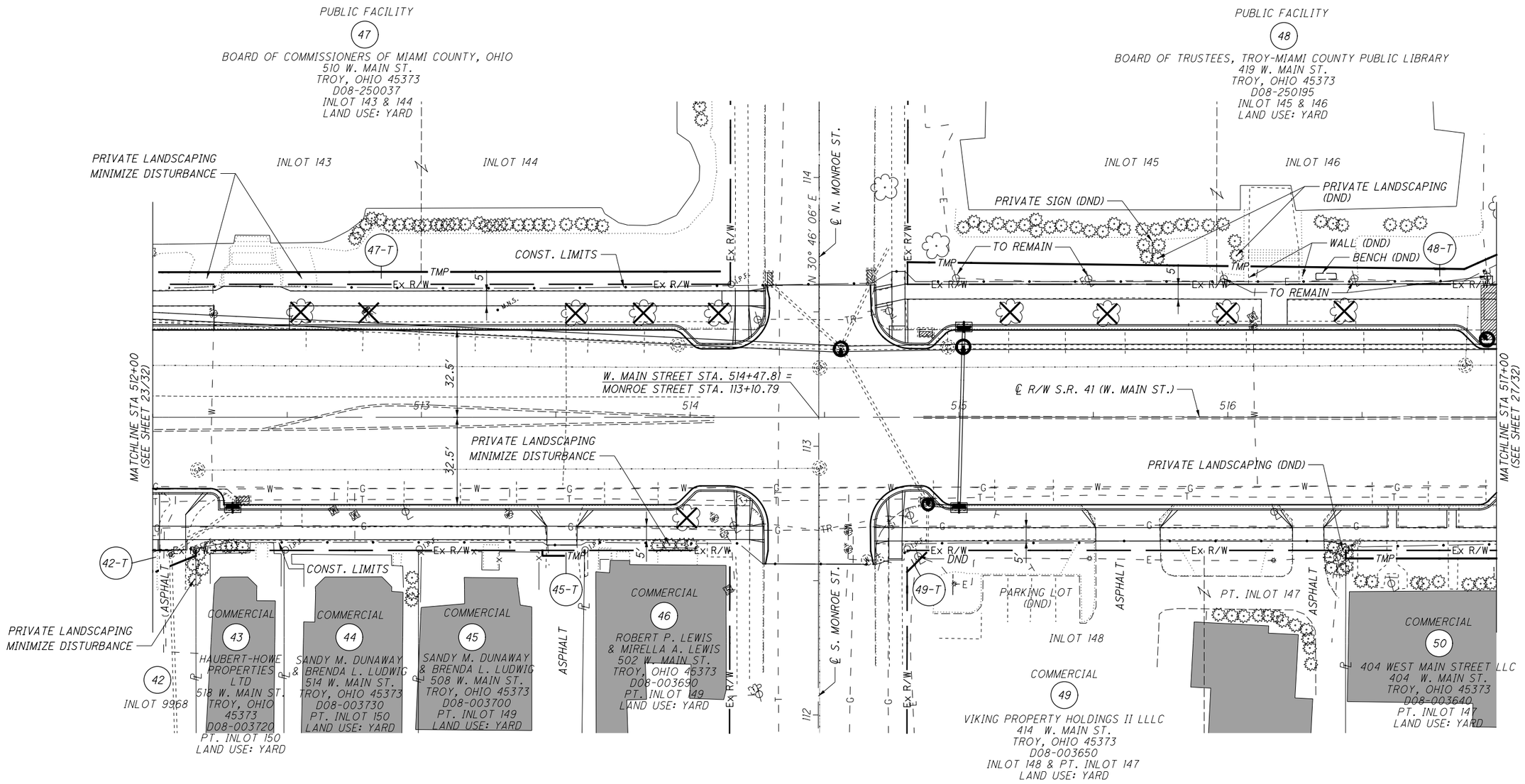

SUBDIVISIONS:

PLAT OF THE CITY OF TROY
INLOTS: 143-150, 9968

REV. BY	DATE	DESCRIPTION
DATE COMPLETED		

HORIZONTAL SCALE IN FEET 0 10 20 40

PID NO. 108662

R/W DESIGNER BJO
R/W REVIEWER JCS

RIGHT OF WAY TOPO SHEET
STA 512+00 TO STA 517+00

MIA-41-9.49

S:\CIN\4300--4399\4354\004\Drawings\CAD\108662\row\sheets\08662RT007.dgn Sheet 12/1/2021 5:05:50 PM CarlR

MIAMI COUNTY
CONCORD TOWNSHIP
CITY OF TROY
SEC. 21 & 28, T. 5 N., R. 6 E.
CONGRESS LANDS WEST OF THE MIAMI RIVER

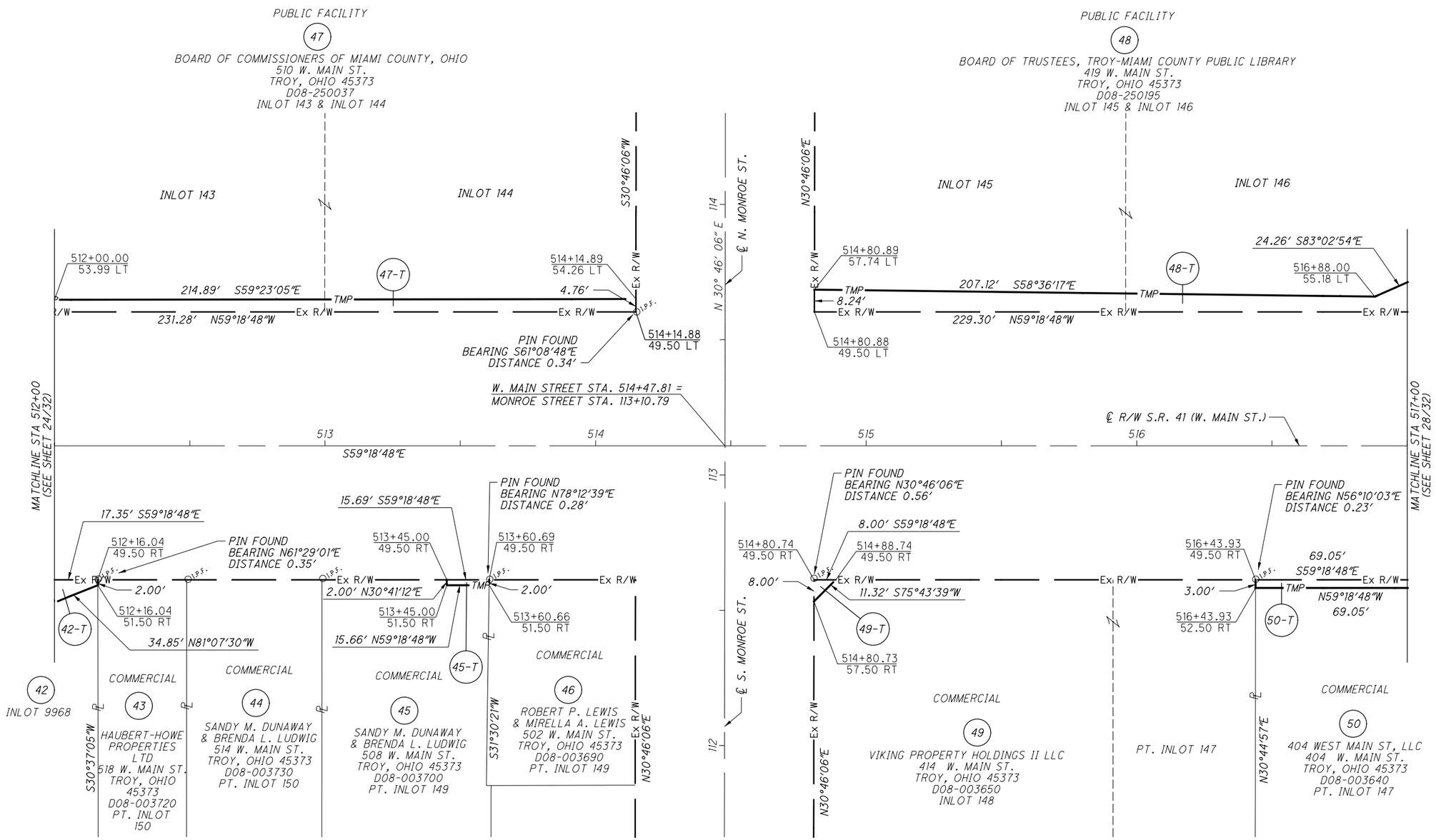

SUBDIVISIONS:

PLAT OF THE CITY OF TROY
INLOTS: 143-150, 9968

REV. BY	DATE	DESCRIPTION

DATE COMPLETED

HORIZONTAL SCALE IN FEET 0 10 20 40

PID NO. 108662

R/W DESIGNER BJO
R/W REVIEWER JCS

RIGHT OF WAY BOUNDARY SHEET
STA 512+00 TO STA 517+00

MIA-41-9.49

S:\CIN\4300--4399\4354\004\Drawings\CAD\108662\row\sheets\08662RB007.dgn Sheet 12/1/2021 5:05:52 PM CarlR

MIAMI COUNTY
CONCORD TOWNSHIP
CITY OF TROY
SEC. 21 & 28, T. 5 N., R. 6 E.
CONGRESS LANDS WEST OF THE MIAMI RIVER

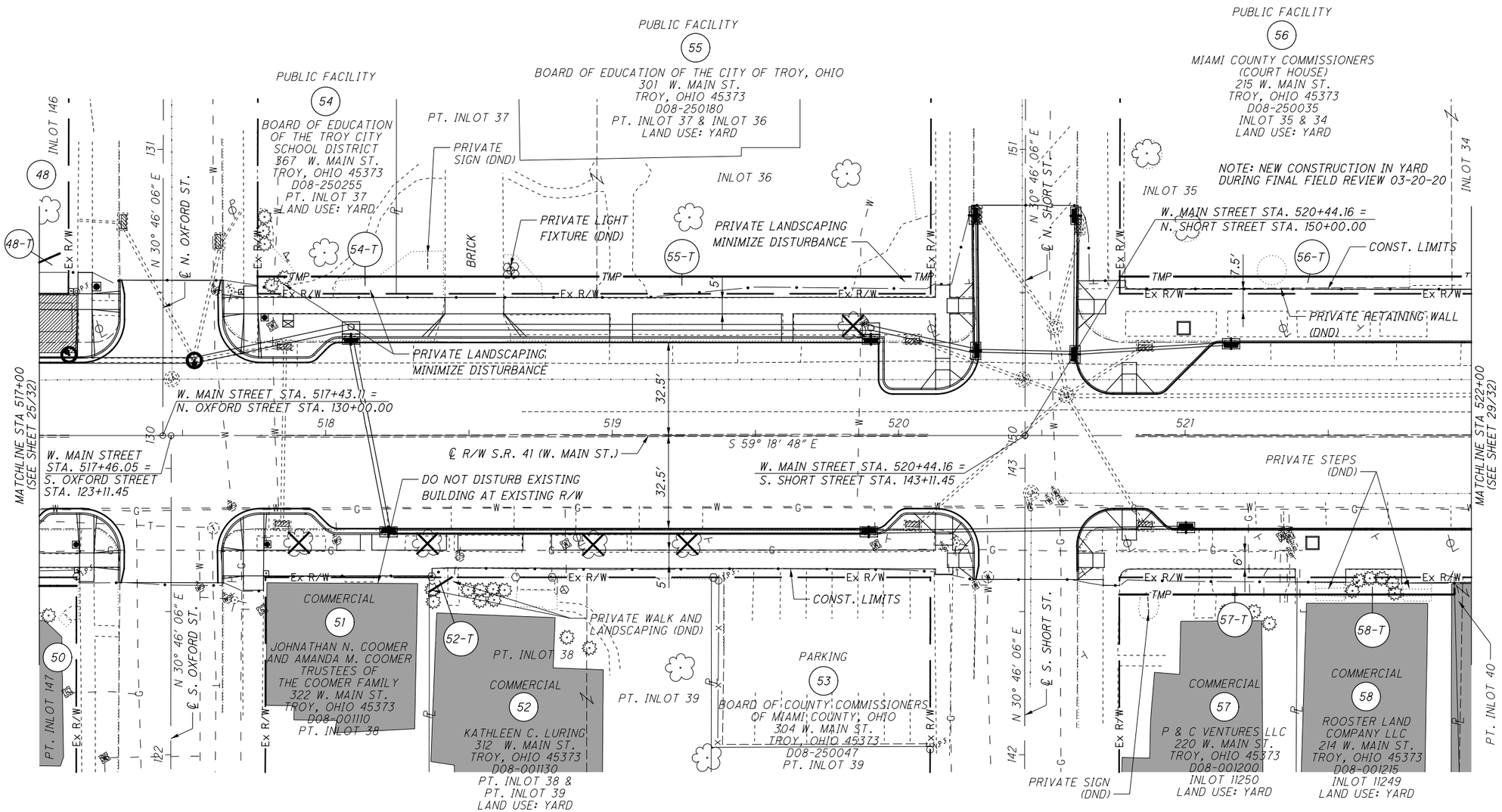

SUBDIVISIONS:

PLAT OF THE CITY OF TROY
INLOTS: 34-40, 146-147

REV. BY	DATE	DESCRIPTION

DATE COMPLETED

HORIZONTAL SCALE IN FEET 0 10 20 40

PID NO. 108662

R/W DESIGNER BJO
R/W REVIEWER JCS

RIGHT OF WAY TOPO SHEET
STA 517+00 TO STA 522+00

MIA-41-9.49

S:\CIN\4300--4399\4354\004\Drawings\CAD\108662\row\sheets\08662RT008.dgn Sheet 12/1/2021 5:05:52 PM CarlR

MIAMI COUNTY
CONCORD TOWNSHIP
CITY OF TROY
SEC. 21 & 28, T. 5 N., R. 6 E.
CONGRESS LANDS WEST OF THE MIAMI RIVER

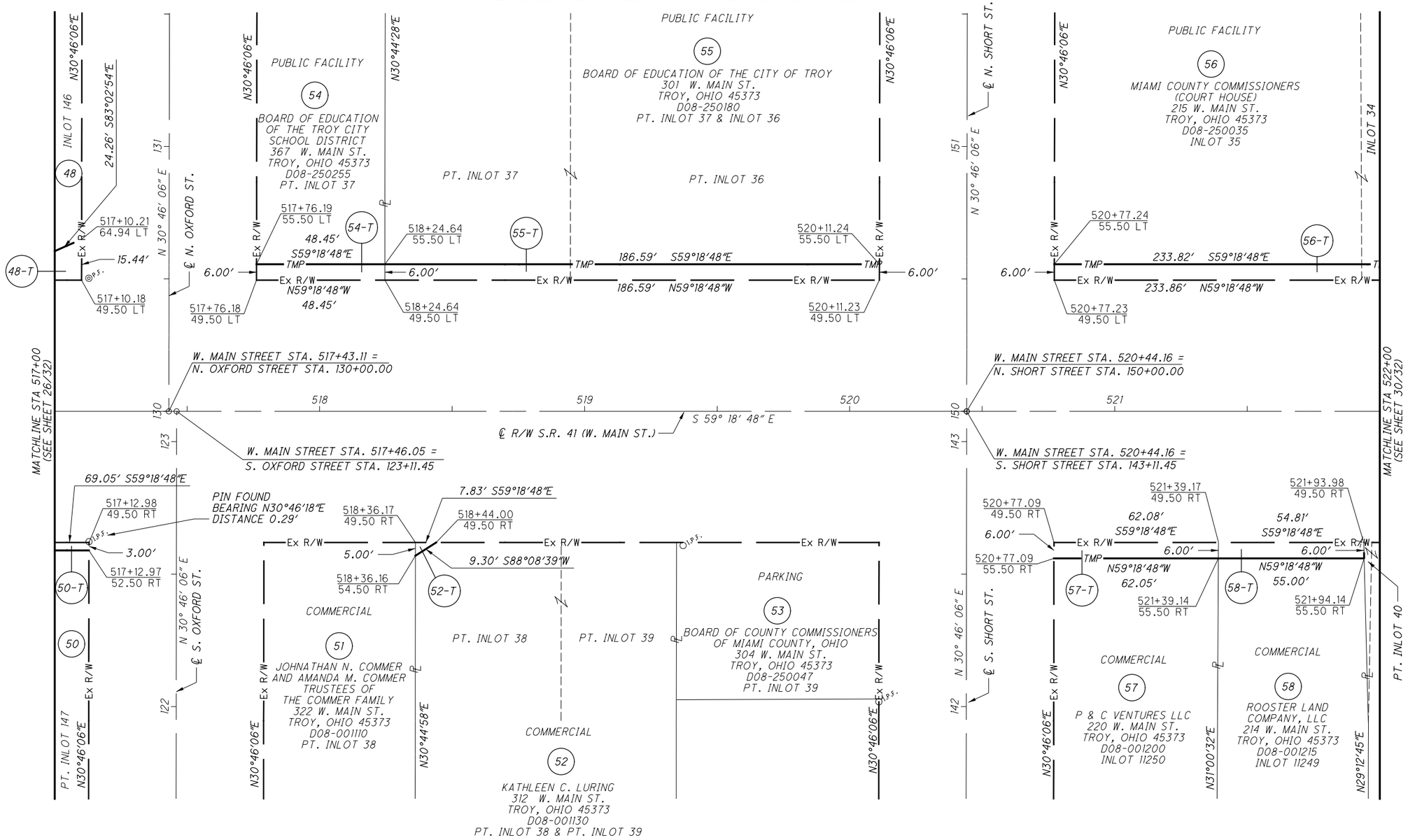

SUBDIVISIONS:

PLAT OF THE CITY OF TROY
INLOTS: 34-40, 146-147

REV. BY	DATE	DESCRIPTION

DATE COMPLETED

HORIZONTAL SCALE IN FEET 0 10 20 40

PID NO. 108662

R/W DESIGNER BJO
R/W REVIEWER JCS

RIGHT OF WAY BOUNDARY SHEET
STA 517+00 TO STA 522+00

MIA-41-9.49

S:\CIN\4300--4399\4354\004\Drawings\CAD\108662\row\sheets\08662RB008.dgn Sheet 12/1/2021 5:05:54 PM CarlR

MIAMI COUNTY
CONCORD TOWNSHIP
CITY OF TROY
SEC. 21 & 28, T. 5 N., R. 6 E.
CONGRESS LANDS WEST OF THE MIAMI RIVER

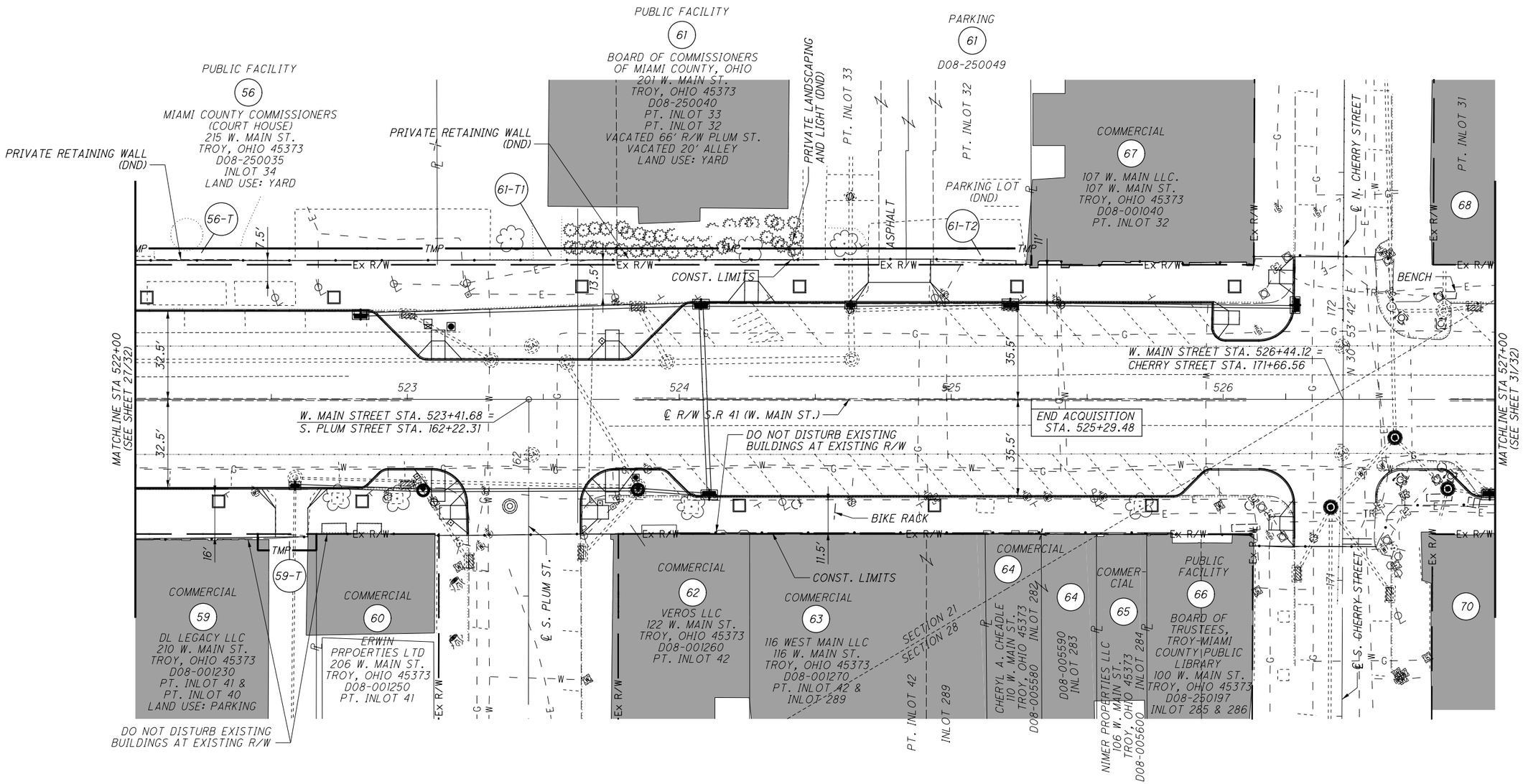

SUBDIVISIONS:

PLAT OF THE CITY OF TROY
INLOTS: 31-35, 40-42, 44, 282-286

REV. BY	DATE	DESCRIPTION

DATE COMPLETED

HORIZONTAL SCALE IN FEET 0 10 20 40

PID NO. 108662

R/W DESIGNER BJO
R/W REVIEWER JCS

RIGHT OF WAY TOPO SHEET
STA 522+00 TO STA 527+00

MIA-41-9.49

S:\CIN\4300--4399\4354\004\Drawings\CAD\108662\row\sheets\08662RT009.dgn Sheet 12/1/2021 5:05:55 PM CarlR

MIAMI COUNTY
CONCORD TOWNSHIP
CITY OF TROY
SEC. 21 & 28, T. 5 N., R. 6 E.
CONGRESS LANDS WEST OF THE MIAMI RIVER

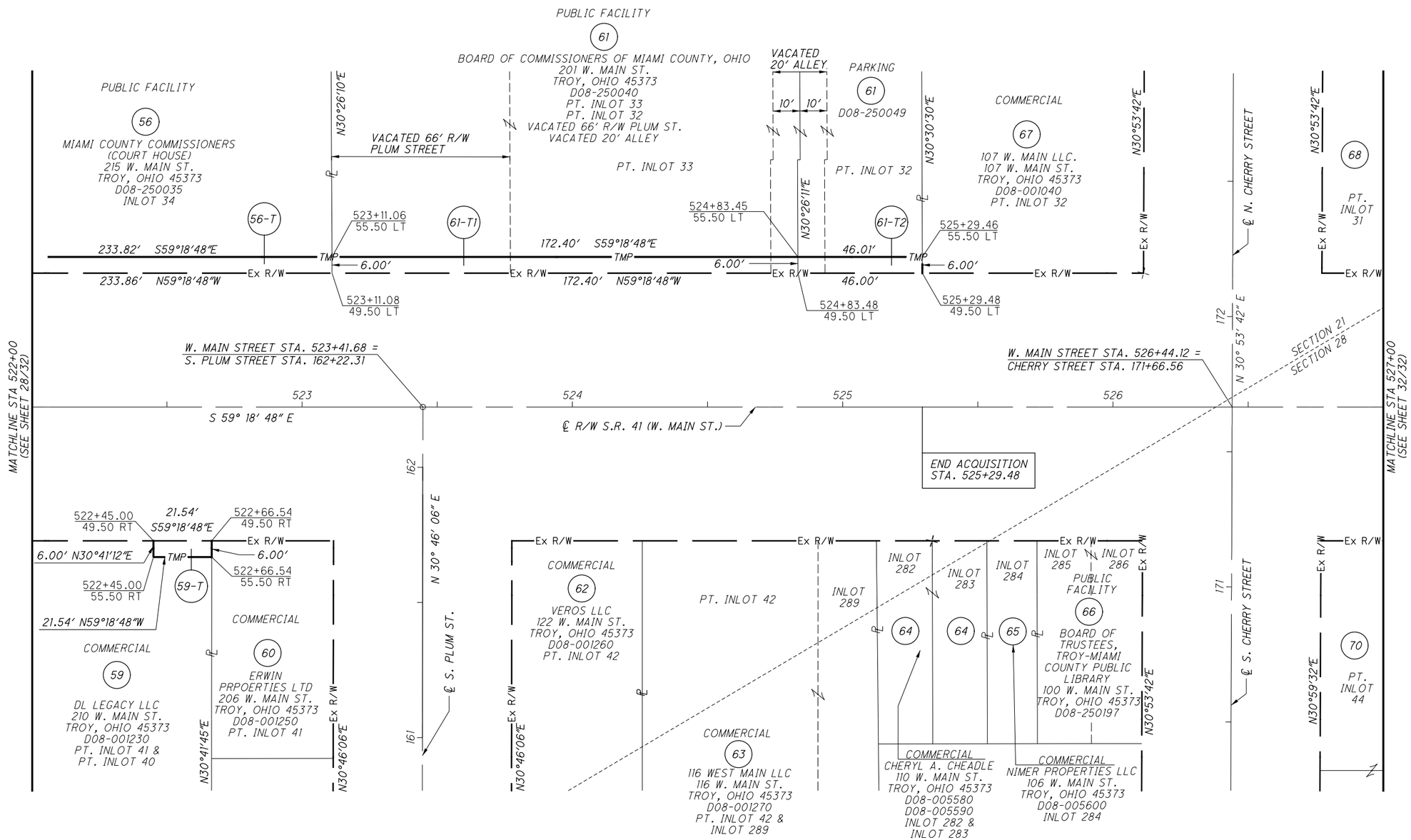

SUBDIVISIONS:

PLAT OF THE CITY OF TROY
INLOTS: 31-35, 40-42, 44, 282-286

REV. BY	DATE	DESCRIPTION

DATE COMPLETED

HORIZONTAL SCALE IN FEET 0 10 20 40

PID NO. 108662

R/W DESIGNER BJO
R/W REVIEWER JCS

RIGHT OF WAY BOUNDARY SHEET
STA 522+00 TO STA 527+00

MIA-41-9.49

S:\CIN\4300--4399\4354\004\Drawings\CAD\108662\row\sheets\08662RB009.dgn Sheet 12/1/2021 5:05:57 PM CarlR

MIAMI COUNTY
CONCORD TOWNSHIP
CITY OF TROY
SEC. 21 & 28, T. 5 N., R. 6 E.
CONGRESS LANDS WEST OF THE MIAMI RIVER

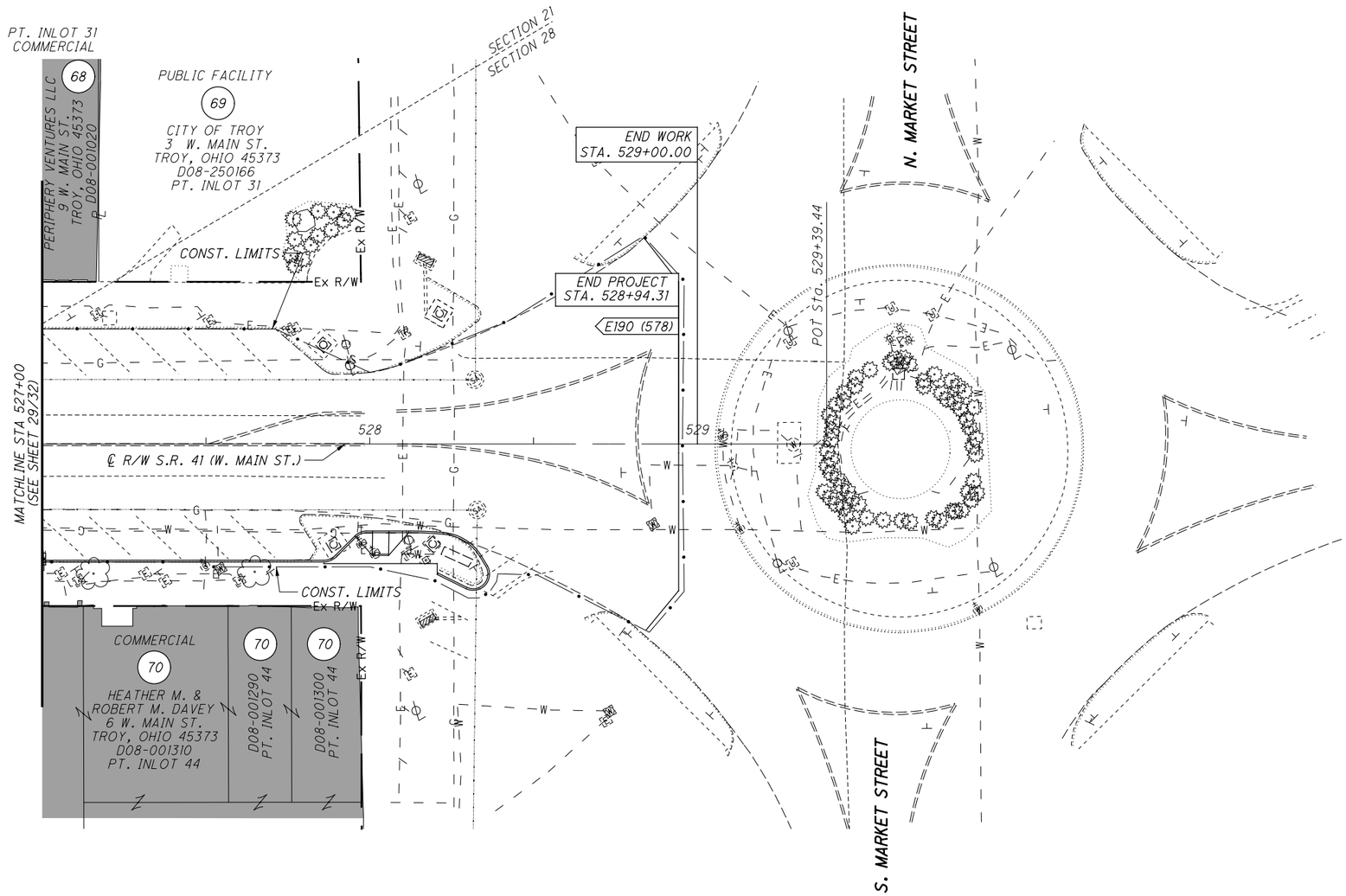

SUBDIVISIONS:

PLAT OF THE CITY OF TROY
INLOTS: 31, 44

REV. BY	DATE	DESCRIPTION

DATE COMPLETED

HORIZONTAL SCALE IN FEET
0 10 20 40

PID NO. 108662

R/W DESIGNER BJO
R/W REVIEWER JCS

RIGHT OF WAY TOPO SHEET
STA 527+00 TO STA 529+39

MIA-41-9.49

S:\CIN\4300--4399\4354\004\Drawings\CAD\108662\row\sheets\08662RT010.dgn Sheet 12/1/2021 5:05:58 PM CarlR

MIAMI COUNTY
CONCORD TOWNSHIP
CITY OF TROY
SEC. 21 & 28, T. 5 N., R. 6 E.
CONGRESS LANDS WEST OF THE MIAMI RIVER

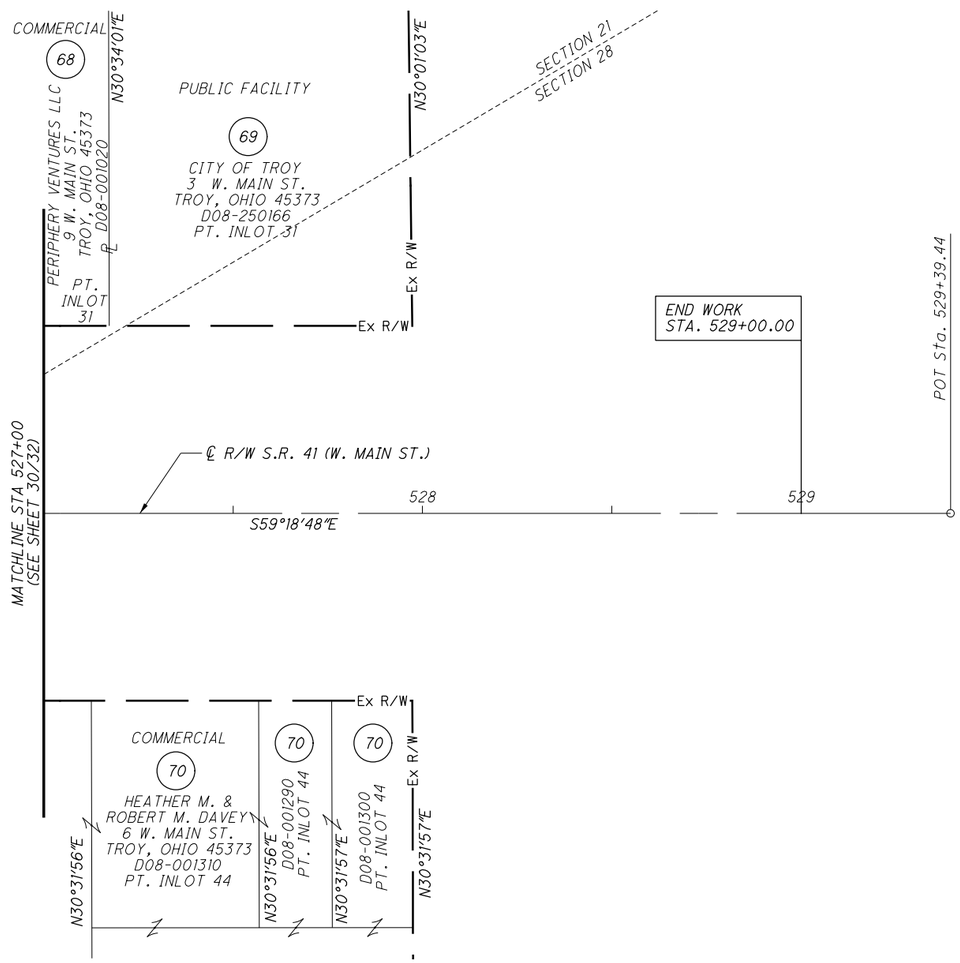

SUBDIVISIONS:

PLAT OF THE CITY OF TROY
INLOTS: 31, 44

REV. BY	DATE	DESCRIPTION

DATE COMPLETED

HORIZONTAL SCALE IN FEET
0 10 20 40

PID NO. 108662

R/W DESIGNER BJO
R/W REVIEWER JCS

RIGHT OF WAY BOUNDARY SHEET
STA 527+00 TO STA 529+39

MIA-41-9.49

222/222

S:\CIN\4300--4399\4354\004\Drawings\CAD\108662\row\sheets\08662RB010.dgn Sheet 12/1/2021 5:05:58 PM CarlR

PROJECT DESCRIPTION

VARIOUS INFRASTRUCTURE IMPROVEMENTS ARE PROPOSED ALONG WEST MAIN STREET (SR 41) AS PART OF A BROADER PHASED CONSTRUCTION PLAN THAT EXTENDS FROM MARKET STREET TO INTERSTATE 75 IN TROY, OH. PROPOSED IMPROVEMENTS INCLUDE PAVEMENT WIDENING, RESURFACING, NEW CURB AND STORM SEWER, NEW SIDEWALKS, TRAFFIC SIGNAL DESIGN, REPLACEMENT OF APPROXIMATELY 500 FEET OF 10-INCH SANITARY SEWER, AND A CULVERT EXTENSION. THE INITIAL PHASE OF IMPROVEMENTS (PHASE 1) WILL EXTEND ROUGHLY FROM RIDGE AVENUE TO MARKET STREET, MORE SPECIFICALLY FROM STATION 481+50 AND STATION 528+94.31, FOLLOWED BY THE REMAINDER OF IMPROVEMENTS CONSTRUCTED IN A LATER PHASE (PHASE 2). THE ESTIMATED LENGTH OF THE PHASE 1 IMPROVEMENTS IS APPROXIMATELY HALF OF THE OVERALL PROJECT LENGTH OF 1.6 MILES.

HISTORIC RECORDS

WE REVIEWED THE ODOT TRANSPORTATION INFORMATION MAPPING SYSTEM (TIMS), AND NO REPORTS/PLANS WERE AVAILABLE FOR REVIEW WITHIN THE PHASE 1 PROJECT LIMITS.

GEOLOGY

THE PROJECT SITE IS LOCATED WITHIN THE SOUTHERN OHIO LOAMY TILL PLAIN. THE SOILS CONSIST OF LOAMY, HIGH-LIME, WISCONSINAN-AGE TILL WITH OUTWASH AND LOESS OVER LOWER PALEOZOIC-AGE CARBONATE ROCKS.

THE QUATERNARY GEOLOGY OF OHIO MAP IDENTIFIES THE SURROUNDING TERRAIN AS GROUND MORAINE, FLAT TO GENTLY UNDULATING. SURFICIAL GEOLOGY OF THE OHIO PORTIONS OF THE PIQUA 30X60 MINUTE QUADRANGLES MAP IDENTIFIES THE SOILS WITHIN THE PHASE 1 LIMITS FROM TOP TO BOTTOM AS: 1) ALLUVIUM (A), 2) SAND AND GRAVEL (SG), 3) UNSORTED MIX (T), 4) SAND AND GRAVEL (SG), 5) CLAY IN TEAYS-AGE VALLEYS (CV), AND 6) INTERBEDDED SHALE, LIMESTONE, AND DOLOMITE (S-L).

ALLUVIUM (A) INCLUDES A WIDE VARIETY OF TEXTURES FROM SILT AND CLAY TO BOULDERS; COMMONLY INCLUDES ORGANIC MATERIAL, GENERALLY NOT COMPACTED, RARELY GREATER THAN 20 FEET THICK.

SAND AND GRAVEL (SG) IS INTERMIXED AND INTERBEDDED, COMMONLY CONTAINING THIN, DISCONTINUOUS LAYERS OF SILT AND CLAY, GRAINS WELL TO MODERATELY SORTED, MODERATELY TO WELL ROUNDED, FINELY STRATIFIED TO MASSIVE, MAY BE CROSS BEDDED, LOCALLY MAY CONTAINS ORGANICS.

UNSORTED MIX (T) CONSISTS OF SILT, CLAY, SAND, GRAVEL, AND BOULDERS OF VARIABLE CARBONATE CONTENT WITH OCCASIONAL SILT, SAND AND GRAVEL LENSES. THE SOILS IN THIS LAYER WERE DEPOSITED DIRECTLY FROM SEVERAL SEPARATE ICE ADVANCES, THE SURFACE OF WHICH MAY BE WAVE-PLANED OR MODIFIED BY LACUSTRINE EROSION AND DEPOSITION.

CLAY IN TEAYS-AGE VALLEYS (CV) IS FROM THE EARLY PLEISTOCENE AGE, AND INCLUDES THE MINFORD CLAY. THIS CLAY MAY CONTAIN INTERBEDDED SILT AND FINE-SAND DELTAIC DEPOSITS WHERE MAIN TRUNK VALLEY JOINS TRIBUTARY VALLEYS.

INTERBEDDED SHALE, LIMESTONE, AND DOLOMITE (S-L) IS FROM CINCINNATI GROUP, UPPER ORDOVICIAN. SHALE IS SHADES OF GRAY, OLIVE, RED, AND GREEN; CALCAREOUS; DOLOMITIC; LOCALLY SILTY. LIMESTONE IS GRAY AND OLIVE; FINELY TO COARSELY CRYSTALLINE; CONTAINS THIN TO MEDIUM, IRREGULAR, NODULAR TO WAVY BEDDING; ARGILLACEOUS. DOLOMITE IS OLIVE AND YELLOWISH GRAY, FINELY TO COARSELY CRYSTALLINE, MOSTLY IN THIN TO MEDIUM BEDS, ARGILLACEOUS. BASED ON THE BEDROCK GEOLOGIC MAP OF OHIO, BEDROCK WITHIN THE PHASE 1 PROJECT LIMITS CONSISTS OF THE ORDOVICIAN UNDIVIDED FORMATION.

RECONNAISSANCE

A FIELD RECONNAISSANCE FOR THE PROJECT WAS CONDUCTED BY A GEOTECHNICAL ENGINEER FROM GEOTECHNOLOGY ON FEBRUARY 19, 2019. THE PROJECT LOCATION IS ALONG A PORTION OF WEST MAIN STREET IN TROY, MIAMI COUNTY, OHIO. DURING OUR FIELD RECONNAISSANCE, NO GEOHAZARDS WERE OBSERVED WITHIN THE IMMEDIATE VICINITY OF THE PROPOSED SITE. THE PROJECT IS LOCATED IN RESIDENTIAL AND COMMERCIAL AREAS. THE EXISTING PAVEMENT OBSERVED WITHIN PHASE 1 APPEARED TO BE IN FAIR CONDITION WITH SIGNS OF LOW TO MEDIUM WEATHERING. PAVEMENT WEAR INCLUDES OCCASIONAL LOW TO MEDIUM SEVERITY, TRANSVERSE, LONGITUDINAL AND ALLIGATOR CRACKING. NO STANDING WATER WAS OBSERVED NEAR THE PAVEMENT AREA.

SUBSURFACE EXPLORATION

THE SUBSURFACE EXPLORATION WAS CONDUCTED WITHIN THE LIMITS OF BOTH PHASES UNDER 1 MOBILIZATION AND CONSISTED OF 20 BORINGS NUMBERED B-001-0-19 THROUGH B-020-0-19. BORINGS B-013 THROUGH B-020 WERE DRILLED WITHIN THE LIMITS OF PHASE 1 WHILE BORINGS B-001 THROUGH B-012 WERE DRILLED WITHIN THE LIMITS OF PHASE 2. THE BORINGS WERE DRILLED BETWEEN FEBRUARY 28 AND MARCH 1, 2019 WITH A CME 550X DRILL RIG ADVANCING HOLLOW-STEM AUGERS. SAMPLING OF THE OVERBURDEN SOILS WAS ACCOMPLISHED AHEAD OF THE AUGERS WITH 2-INCH-OUTSIDE-DIAMETER SPLIT-BARREL SAMPLERS IN GENERAL ACCORDANCE WITH THE PROCEDURES OUTLINED BY ASTM D1586. STANDARD PENETRATION TESTS WERE PERFORMED ON THE SPLIT-SPOON SAMPLES. THE AUTOMATIC HAMMER WAS CALIBRATED ON MAY 1, 2018 AND THE ENERGY RATIO WAS DETERMINED TO BE 77 PERCENT. REPRESENTATIVE PORTIONS OF THE SPLIT-BARREL SAMPLES WERE PLACED IN GLASS JARS WITH LIDS TO PRESERVE THE IN-SITU MOISTURE CONTENTS OF THE SAMPLES. THE GLASS JARS WERE LABELED IN THE FIELD FOR IDENTIFICATION WHEN RETURNED TO OUR LABORATORY.

EXPLORATION FINDINGS

THE TOPSOIL OR EXISTING PAVEMENT WAS UNDERLAIN BY FILL, NATIVE COHESIVE AND/OR GRANULAR SOILS. TOPSOIL WAS ENCOUNTERED AT THE GROUND SURFACE IN BORINGS B-015 AND B-018 AND RANGED BETWEEN 6 TO 8 INCHES THICK. THE EXISTING PAVEMENT SECTION AS ENCOUNTERED BENEATH THE GROUND SURFACE IN FIVE BORINGS

PROJECT LEGEND

DESCRIPTION	ODOT CLASS	CLASSIFIED MECH./VISUAL	
GRAVEL AND/OR STONE FRAGMENTS	A-1-a	3	8
GRAVEL AND/OR STONE FRAGMENTS WITH SAND	A-1-b	1	6
GRAVEL WITH SAND AND SILT	A-2-4	1	7
GRAVEL WITH SAND, SILT AND CLAY	A-2-6	2	6
SANDY SILT	A-4a	2	0
SILT AND CLAY	A-6a	2	3
SILTY CLAY	A-6b	1	1
CLAY	A-7-6	4	1
	TOTAL	16	32

PAVEMENT OR BASE = X = APPROXIMATE THICKNESS — VISUAL

SOD AND TOPSOIL = X = APPROXIMATE THICKNESS — VISUAL

BORING LOCATION - PLAN VIEW.

DRIVE SAMPLE AND/OR ROCK CORE BORING PLOTTED TO VERTICAL SCALE ONLY. HORIZONTAL BAR INDICATES A CHANGE IN STRATIGRAPHY.

WC INDICATES WATER CONTENT IN PERCENT.

N_{60} INDICATES STANDARD PENETRATION RESISTANCE NORMALIZED TO 60% DRILL ROD ENERGY RATIO.

W— INDICATES FREE WATER ELEVATION.

SS INDICATES A SPLIT SPOON SAMPLE.

NP INDICATES A NON-PLASTIC SAMPLE.

● INDICATES A PLASTIC MATERIAL WITH A MOISTURE CONTENT EQUAL TO OR GREATER THAN THE LIQUID LIMIT MINUS 3.

* INDICATES A SAMPLE TAKEN WITHIN 3 FT OF PROPOSED GRADE.

EXPLORATION FINDINGS (CONTINUED)

GENERALLY CONSISTED OF ASPHALTIC CONCRETE WITH OR WITHOUT AGGREGATE BASE. THE ONLY EXCEPTIONS OCCURRED IN BORINGS B-019 AND B-020 WHERE PORTLAND CEMENT CONCRETE WAS ENCOUNTERED BENEATH THE SURFICIAL ASPHALT PAVEMENT.

THE SUBGRADE SOILS ENCOUNTERED WITHIN THE PHASE 1 PROJECT LIMITS CONSISTED OF 67 PERCENT GRANULAR MATERIALS AND 33 PERCENT COHESIVE MATERIALS. WITH THE EXCEPTION OF BORING B-015, GRANULAR MATERIALS WERE GENERALLY ENCOUNTERED WITHIN THE LOWER HALF OR MORE OF THE EXPLORED PROFILE DEPTH OF EACH BORING. THE GRANULAR MATERIALS WERE CLASSIFIED AS: 1) GRAVEL AND STONE FRAGMENTS (A-1-A); 2) GRAVEL AND STONE FRAGMENTS WITH SAND (A-1-B); 3) GRAVEL AND STONE FRAGMENTS WITH SAND AND SILT (A-2-4); 3) GRAVEL AND STONE FRAGMENTS WITH SAND, SILT AND CLAY (A-2-6); AND 4) SANDY SILT (A-4A). WITH RESPECT TO THE SOIL DENSITY, THE GRANULAR SOILS CAN BE CHARACTERIZED AS HAVING A RELATIVE DENSITY RANGING FROM VERY LOOSE TO VERY DENSE, CORRELATING TO CONVERTED SPT-N VALUES (N60) BETWEEN 4 AND 94 BLOWS PER FOOT (BPF). IT SHOULD BE NOTED THAT N60 VALUES WERE ELEVATED IN SEVERAL SAMPLES DUE TO THE PRESENCE OF GRAVEL AND/OR STONE FRAGMENTS THAT WERE LARGE THAN THE OPENING OF THE SAMPLER. THE NATURAL MOISTURE CONTENT OF REPRESENTATIVE SAMPLES RANGED FROM 4 TO 28 PERCENT. SEVERAL PARTICLE SIZE ANALYSES WERE PERFORMED ON REPRESENTATIVE SAMPLES OF THE GRANULAR SUBGRADE SOILS WITH MATERIAL PROPORTIONS RANGING FROM 39% TO 76% GRAVEL, 13% TO 32% SAND, 5% TO 17% SILT, AND 3% TO 17% CLAY. COHESIVE SUBGRADE MATERIALS WERE CLASSIFIED AS: 1) SILT & CLAY (A-6A); 2) SILTY CLAY (A-6B); AND 3) CLAY (A-7-6). WITH RESPECT TO THE SOIL STRENGTH, THE COHESIVE SOILS ENCOUNTERED CAN BE CHARACTERIZED AS MEDIUM STIFF TO VERY STIFF IN CONSISTENCY, CORRELATING TO CONVERTED SPT-N VALUES (N60) BETWEEN 6 AND 35 BLOWS PER FOOT (BPF). THE NATURAL MOISTURE CONTENTS OF REPRESENTATIVE SAMPLES RANGED FROM 14 TO 27 PERCENT. BASED ON ATTERBERG LIMIT TESTS PERFORMED ON REPRESENTATIVE SAMPLES OF THE SUBGRADE SOILS OBTAINED ALONG THE PROJECT ROADWAY, THE LIQUID AND PLASTIC LIMITS OF THE COHESIVE SOILS RANGED FROM 27 TO 55 PERCENT AND FROM 17 TO 27 PERCENT, RESPECTIVELY.

WITH THE EXCEPTION OF BORING B-020, GROUNDWATER WAS ENCOUNTERED IN EACH OF THE PHASE 1 BORINGS DURING DRILLING AND RANGED BETWEEN 7 TO 9.5 FEET (ELEVATION 816.6 TO 821.1 FEET).

SPECIFICATIONS

THIS GEOTECHNICAL EXPLORATION WAS PERFORMED IN ACCORDANCE WITH THE STATE OF OHIO, DEPARTMENT OF TRANSPORTATION, OFFICE OF GEOTECHNICAL ENGINEERING, SPECIFICATIONS FOR GEOTECHNICAL EXPLORATIONS, DATED JULY 2018.

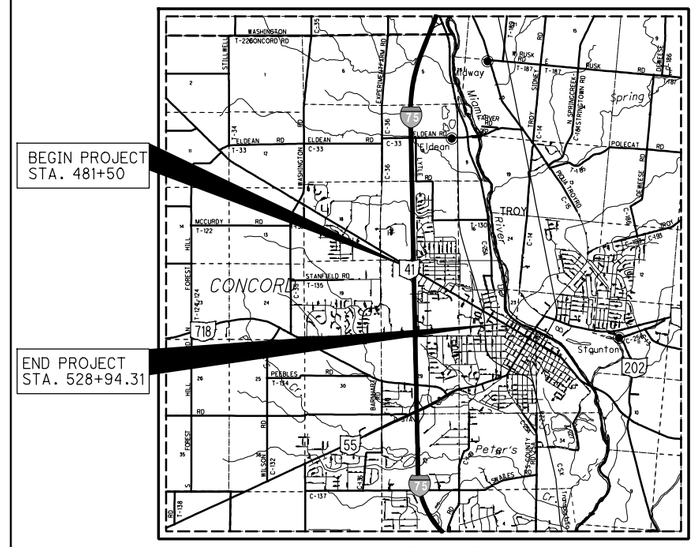

LOCATION MAP

SCALE IN MILES

0 1 2 3 4

N

PARTICLE SIZE DEFINITIONS

BOULDERS	12"	COBBLES	3"	GRAVEL	2.0 mm (No. 10 SIEVE)	COARSE SAND	0.42 mm (No. 40 SIEVE)	FINE SAND	0.074 mm (No. 200 SIEVE)	SILT	0.005 mm	CLAY

INDEX OF SHEETS							
SUMMARY OF SOIL TEST DATA, 2							
LOCATION		PLAN VIEW SHEET	PROFILE SHEET	CUT MAX.		FILL EMB. MAX.	
FROM STA.	TO STA.						
WEST MAIN STREET (SR 41)							
BEGIN	493+50	3	3	0.0	FT	0.2	FT
493+50	506+50	4	4	0.0	FT	0.7	FT
506+50	519+50	5	5	0.0	FT	0.3	FT
519+50	END	6	6	0.0	FT	0.0	FT

AVAILABLE INFORMATION

ALL AVAILABLE SOIL AND BEDROCK INFORMATION THAT CAN BE CONVENIENTLY SHOWN ON THE GEOTECHNICAL EXPLORATION SHEETS HAS BEEN SO REPORTED. ADDITIONAL EXPLORATIONS MAY HAVE BEEN MADE TO STUDY SOME SPECIAL ASPECT OF THE PROJECT. COPIES OF THIS DATA, IF ANY, MAY BE INSPECTED IN THE DISTRICT DEPUTY DIRECTOR'S OFFICE OR THE OFFICE OF GEOTECHNICAL ENGINEERING AT 2100 N COUNTY RD 25A IN TROY, OHIO 45373.

RECON TMS 02/19/19
DRILLING - JG 02/27/19 - 03/01/19
DRAWN - GL 05/06/19-06/01/19 & 03/27/20
REVIEWED - SPR 03/30/20

DESIGN AGENCY
GEOTECHNOLOGY INC
FROM THE GROUND UP

PID NO. 108662

SOIL PROFILE

MIA-41-09.49

O:\Projects\J033\J033897.01-West Main Street (SR41) Corridor Improve\Sheets\108662.ICOOL.Phase 1.dgn Sheet 3/27/2020 4:24:05 PM glogunova

PROJECT SUMMARY OF SOIL TEST DATA
WEST MAIN STREET (SR 41)

EXPLORATION NO., STATION & OFFSET	FROM	TO	SAMPLE ID	N60	% REC	HP tsf	% GR	% CS	% FS	% SILT	% CLAY	LL	PL	PI	% WC	ODOT CLASS (GI)	ppm SO4
B-013-0-19	1.50	3.00	SS-1	8	72	1.80	14	14	18	22	32	37	19	18	17	A-6b (7)*	1460
STA. 484+76, 19' LT.	3.00	4.50	SS-2	19	67	1.80	0	5	7	39	49	41	22	19	25	A-7-6 (12)	
LATITUDE = 40.045731	4.50	6.00	SS-3	35	78	2.00	VERY STIFF, BROWN, SILTY CLAY								14	A-6b (VISUAL)	
LONGITUDE = -84.217222	6.00	7.50	SS-4	65	89	-	MEDIUM DENSE TO VERY DENSE, BROWN, GRAVEL W/SAND, SILT & CLAY								8	A-2-6 (VISUAL)	
	7.50	9.00	SS-5	26	78	-	SAME AS SS-4								12	A-2-6 (VISUAL)	
	9.00	10.50	SS-6	50	72	-	SAME AS SS-4								10	A-2-6 (VISUAL)	
B-014-0-19	2.50	4.00	SS-1	26	61	1.80	36	8	11	24	21	37	22	15	25	A-6a (4)	360
STA. 488+45, 17' RT.	4.00	5.50	SS-2	31	56	2.00	54	8	8	13	17	32	20	12	22	A-2-6 (0)	
LATITUDE = 40.045152	5.50	7.00	SS-3	40	50	2.00	SAME AS SS-2								10	A-2-6 (VISUAL)	
LONGITUDE = -84.216133	7.00	8.50	SS-4	49	56	2.00	SAME AS SS-2								15	A-2-6 (VISUAL)	
	8.50	10.00	SS-5	44	28	-	DENSE, BROWN, GRAVEL/LIMESTONE FRAG. W/SAND								8	A-1-b (VISUAL)	
B-015-0-19	0.50	1.50	SS-1B	8	67	1.80	21	11	23	26	19	27	17	10	17	A-4a (2)*	300
STA. 493+72, 31' LT.	1.50	3.00	SS-2	9	83	1.50	14	13	25	28	20	28	17	11	27	A-6a (3)*	
LATITUDE = 40.044565	3.00	4.50	SS-3	10	100	1.80	STIFF, DARK BROWN AND GRAY, SILT & CLAY								25	A-6a (VISUAL)*	
LONGITUDE = -84.214405	4.50	6.00	SS-4	12	100	2.00	SAME AS SS-3								27	A-6a (VISUAL)	
	6.00	7.50	SS-5	14	100	2.00	SAME AS SS-3								29	A-6a (VISUAL)	
	8.50	10.00	SS-6	24	39	-	MEDIUM DENSE, BROWN, GRAVEL W/SAND, SILT & CLAY								17	A-2-6 (VISUAL)	
B-016-0-19	1.20	2.70	SS-1	8	100	2.50	7	11	21	24	37	43	23	20	23	A-7-6 (10)*	480
STA. 497+37, 17' RT.	2.70	4.20	SS-2	26	39	-	45	15	8	17	15	27	21	6	22	A-2-4 (0)	
LATITUDE = 40.043953	4.20	5.70	SS-3	49	61	-	MEDIUM DENSE TO VERY DENSE, GRAVEL W/SAND & SILT								8	A-2-4 (VISUAL)	
LONGITUDE = -84.213355	5.70	7.20	SS-4	72	83	-	SAME AS SS-2								14	A-2-4 (VISUAL)	
	7.20	8.70	SS-5	50	78	-	SAME AS SS-2								7	A-2-4 (VISUAL)	
	8.70	10.20	SS-6	60	100	-	SAME AS SS-2								11	A-2-4 (VISUAL)	
B-017-0-19	1.00	2.50	SS-1	8	72	1.50	15	14	18	22	31	41	22	19	24	A-7-6 (7)*	680
STA. 500+35, 20' LT.	2.50	4.00	SS-2	13	78	-	MEDIUM DENSE, BROWN, GRAVEL W/SAND								28	A-1-b (VISUAL)	
LATITUDE = 40.043635	4.00	5.50	SS-3	17	28	-	52	12	11	13	12	NP	NP	NP	26	A-1-b (0)	
LONGITUDE = -84.212367	5.50	7.00	SS-4	19	0	-	SAME AS SS-3								-	A-1-b (VISUAL)	
	7.00	8.50	SS-5	17	94	-	SAME AS SS-3								12	A-1-b (VISUAL)	
	8.50	10.00	SS-6	23	67	-	SAME AS SS-3								25	A-1-b (VISUAL)	
	-																
B-018-0-19	0.70	1.50	SS-1B	6	83	0.80	SAME AS SS-2								26	A-7-6 (VISUAL)*	580
STA. 504+98, 21' RT.	1.50	3.00	SS-2	9	50	1.00	8	28	15	19	30	55	27	28	25	A-7-6 (10)*	
LATITUDE = 40.042911	3.00	4.50	SS-3	4	33	-	39	23	9	14	15	37	23	14	24	A-2-6 (1)	
LONGITUDE = -84.211000	4.50	6.00	SS-4	23	78	-	MEDIUM DENSE TO DENSE, BROWN, GRAVEL W/SAND & SILT								9	A-2-4 (VISUAL)	
	6.00	7.50	SS-5	60	89	-	SAME AS SS-4								10	A-2-4 (VISUAL)	
	8.50	10.00	SS-6	28	0	-	SAME AS SS-4								-	A-2-4 (VISUAL)	
B-019-0-19	1.50	2.50	SS-1A	12	67	-	MEDIUM DENSE, BROWN, GRAVEL W/SAND								5	A-1-b (VISUAL)*	900
STA. 508+24, 1' LT.	2.50	3.00	SS-1B	12	67	1.00	32	14	9	30	15	NP	NP	NP	18	A-4a (2)*	
LATITUDE = 40.042519	3.00	4.50	SS-2	42	56	-	76	9	4	7	4	NP	NP	NP	12	A-1-a (0)	
LONGITUDE = -84.209950	4.50	6.00	SS-3	94	89	-	SAME AS SS-2								5	A-1-a (VISUAL)	
	6.00	7.50	SS-4	71	83	-	SAME AS SS-2								5	A-1-a (VISUAL)	
	7.50	9.00	SS-5	54	89	-	SAME AS SS-2								6	A-1-a (VISUAL)	
	9.00	10.50	SS-6	85	100	-	SAME AS SS-2								10	A-1-a (VISUAL)	
B-020-0-19	1.50	3.00	SS-1	42	78	-	64	21	6	6	3	NP	NP	NP	5	A-1-a (0)*	480
STA. 512+60, 23' RT.	3.00	4.50	SS-2	44	83	-	62	23	7	5	3	NP	NP	NP	5	A-1-a (0)	
LATITUDE = 40.041871	4.50	6.00	SS-3	33	100	-	SAME AS SS-2								5	A-1-a (VISUAL)	
LONGITUDE = -84.208640	6.00	7.50	SS-4	45	100	-	SAME AS SS-2								4	A-1-a (VISUAL)	
	7.50	9.00	SS-5	45	89	-	SAME AS SS-2								5	A-1-a (VISUAL)	
	9.00	10.50	SS-6	56	100	-	SAME AS SS-2								4	A-1-a (VISUAL)	

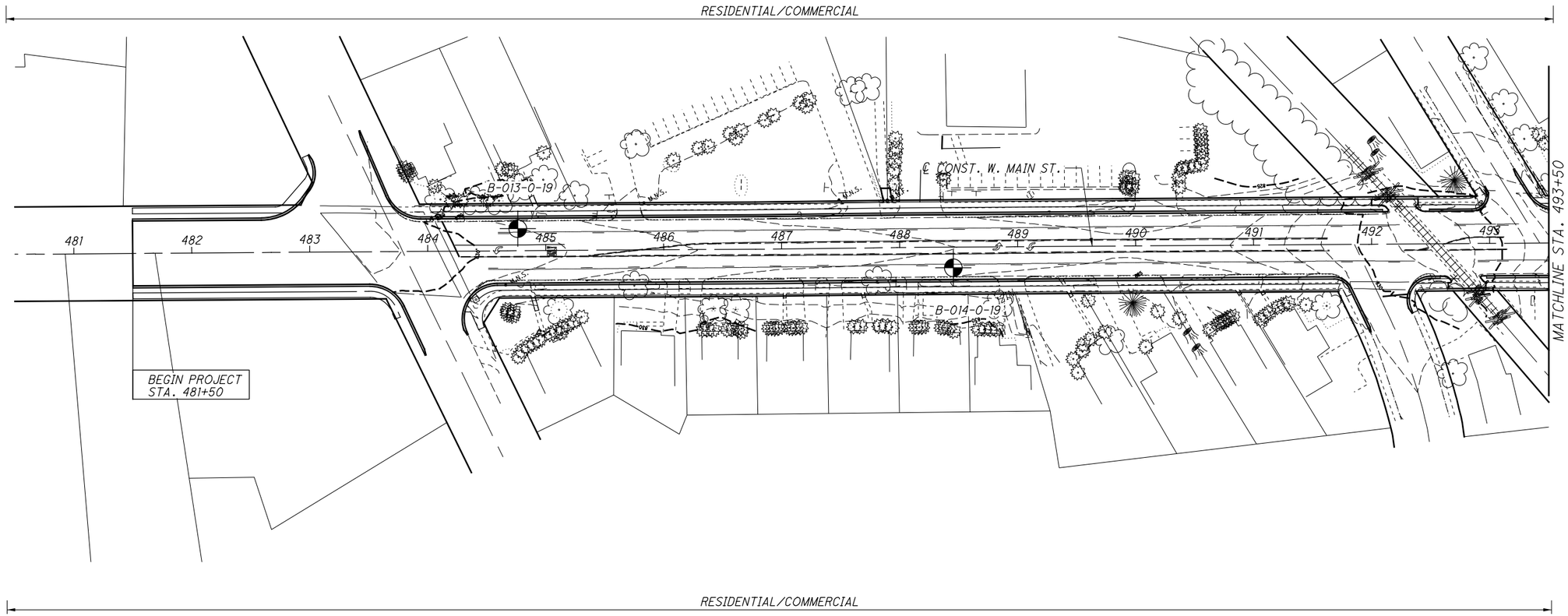

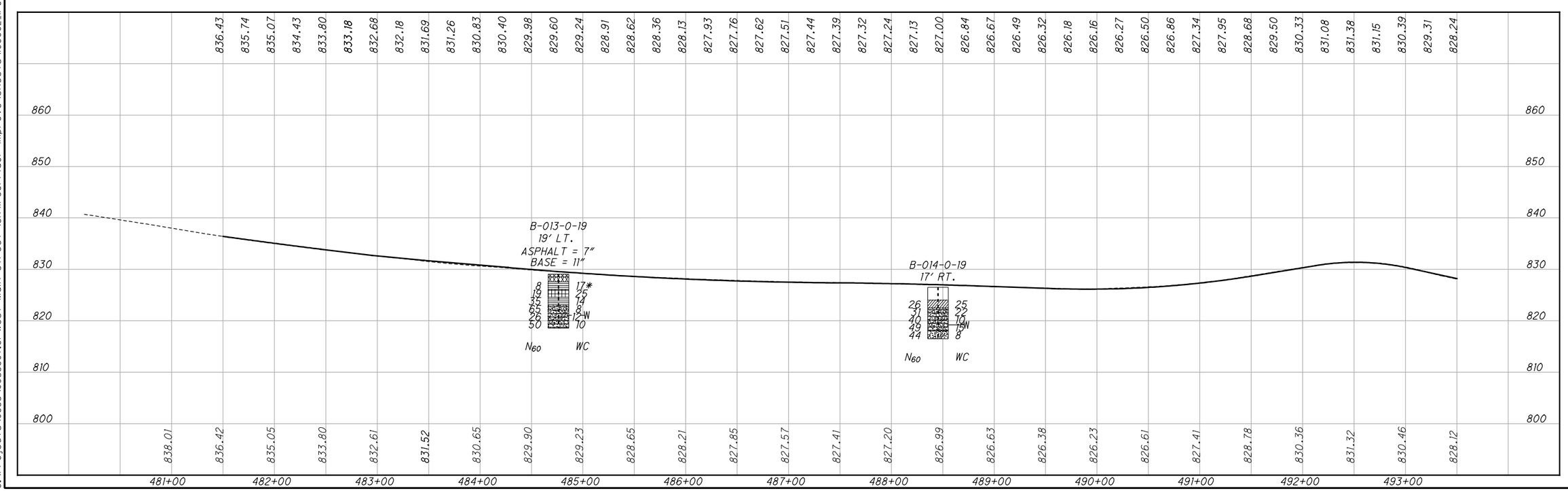

HORIZONTAL SCALE IN FEET
0 25 50 100

DRAWN GL
CHECKED SPR

SOIL PROFILE

BEGIN TO STA. 493+50 WEST MAIN STREET (SR 41)

MIA-41-09.49

O:\Projects\J033\J033897.01-West Main Street (SR41) Corridor Improve\Sheets\108662_IP004_Phase1.dgn Sheet 3/27/2020 4:24:55 PM glogunova

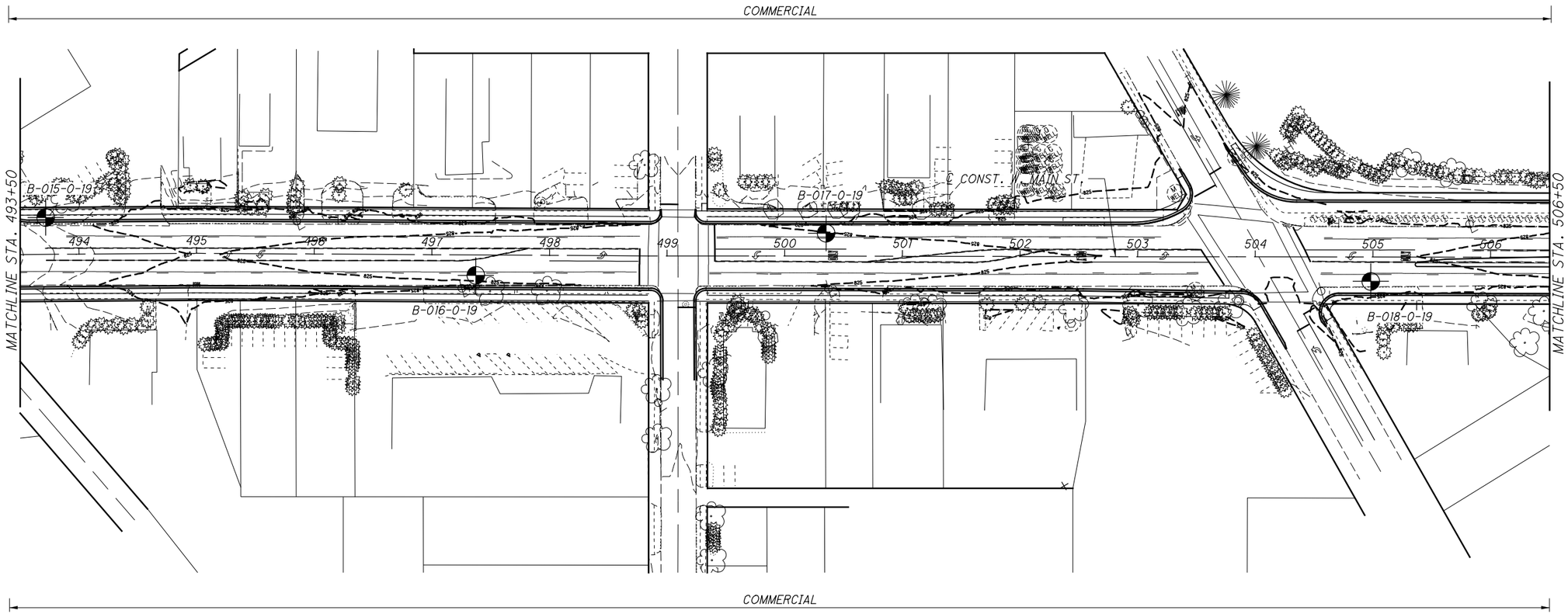

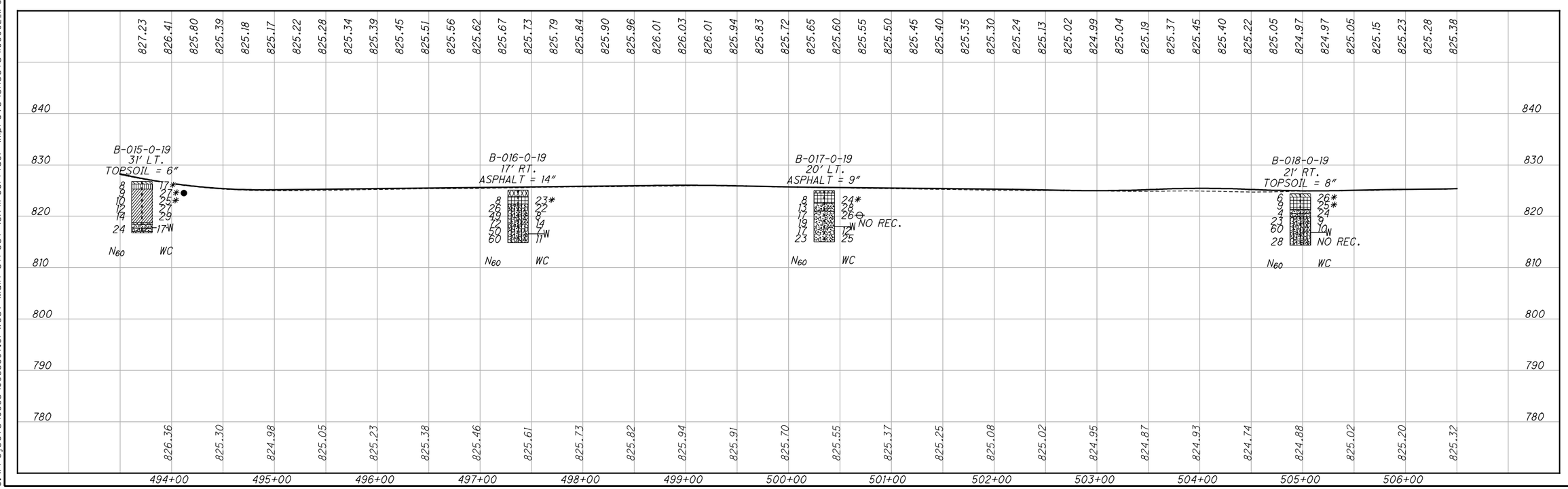

HORIZONTAL SCALE IN FEET
0 25 50 100

DRAWN GL
CHECKED SPR

SOIL PROFILE

STA. 493+50 TO STA. 506+50 WEST MAIN STREET (SR 41)

MIA-41-09.49

4 / 6

O:\Projects\J033\J033897.01-West Main Street (SR41) Corridor Improve\Sheets\108662_IP005.dgn Sheet 3/27/2020 4:25:38 PM glogunova

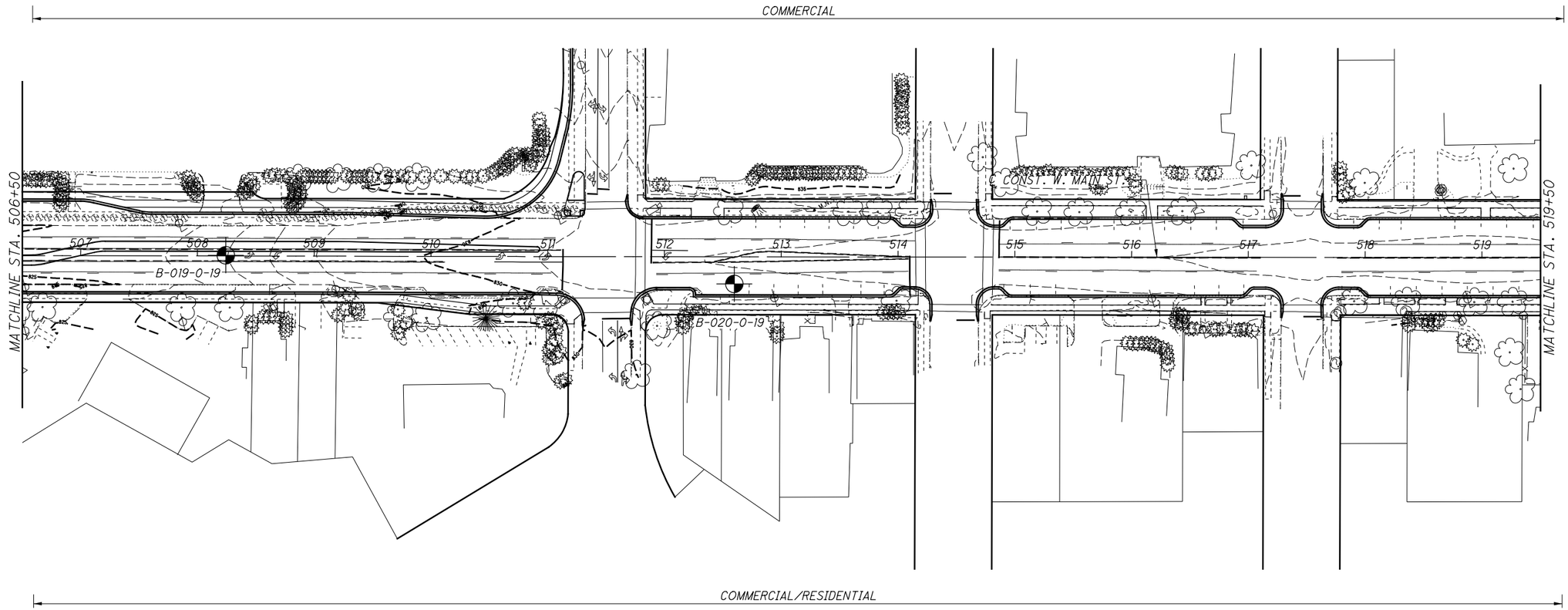

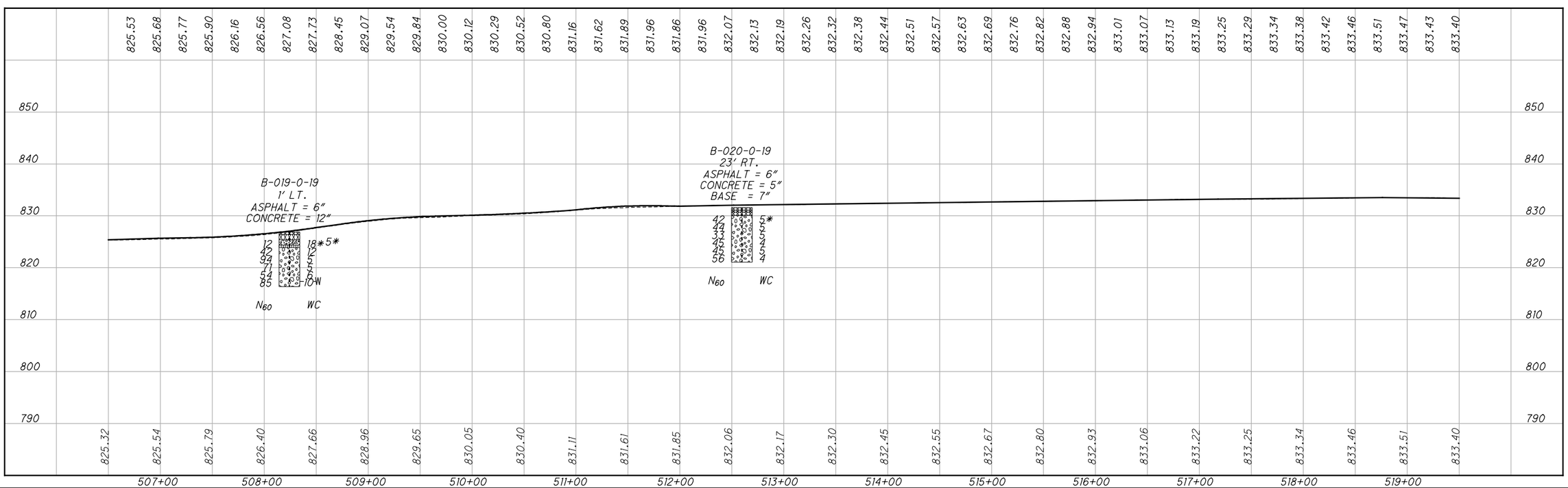

HORIZONTAL SCALE IN FEET
0 25 50 100

DRAWN GL
CHECKED SPR

SOIL PROFILE

STA. 506+50 TO STA. 519+50 WEST MAIN STREET (SR 41)

MIA-41-09.49

5 / 6

0:\Projects\J033\J033897.01-West Main Street (SR41) Corridor Improve\Sheets\108662_IP006.dgn Sheet 3/27/2020 4:26:19 PM glogunova

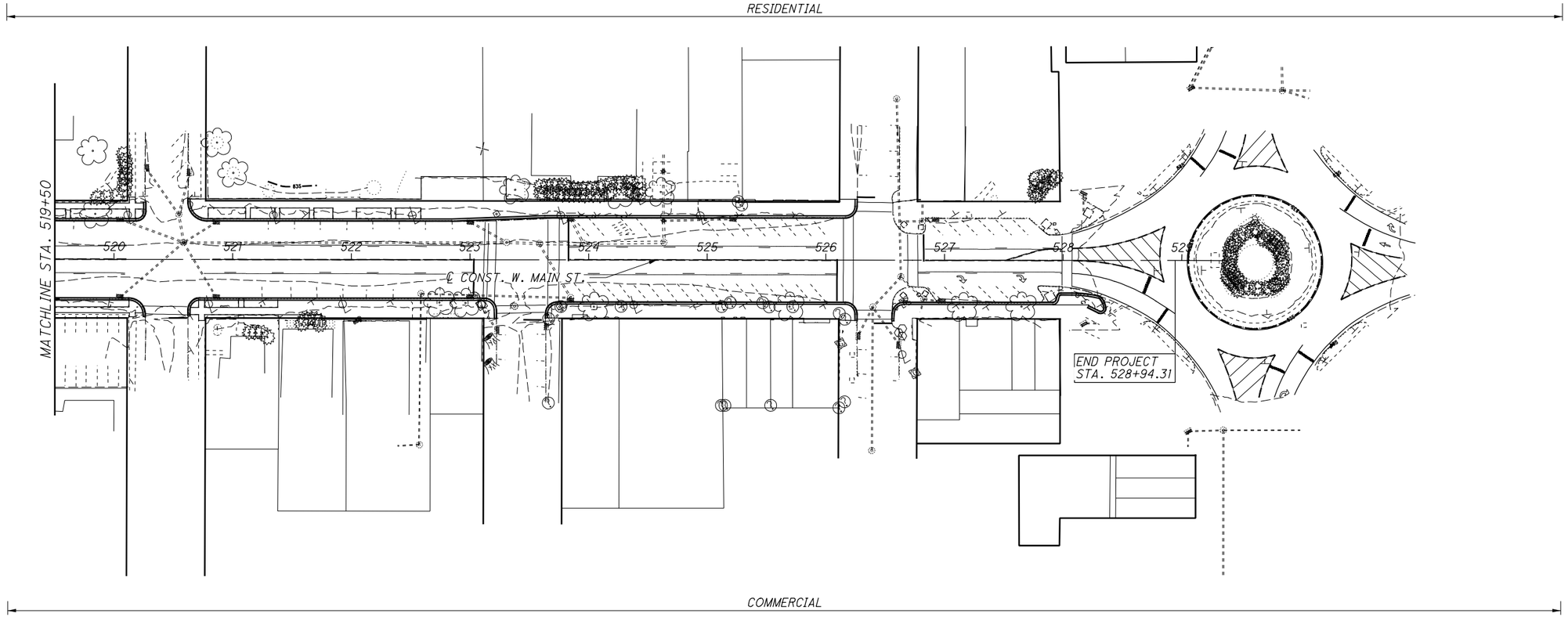

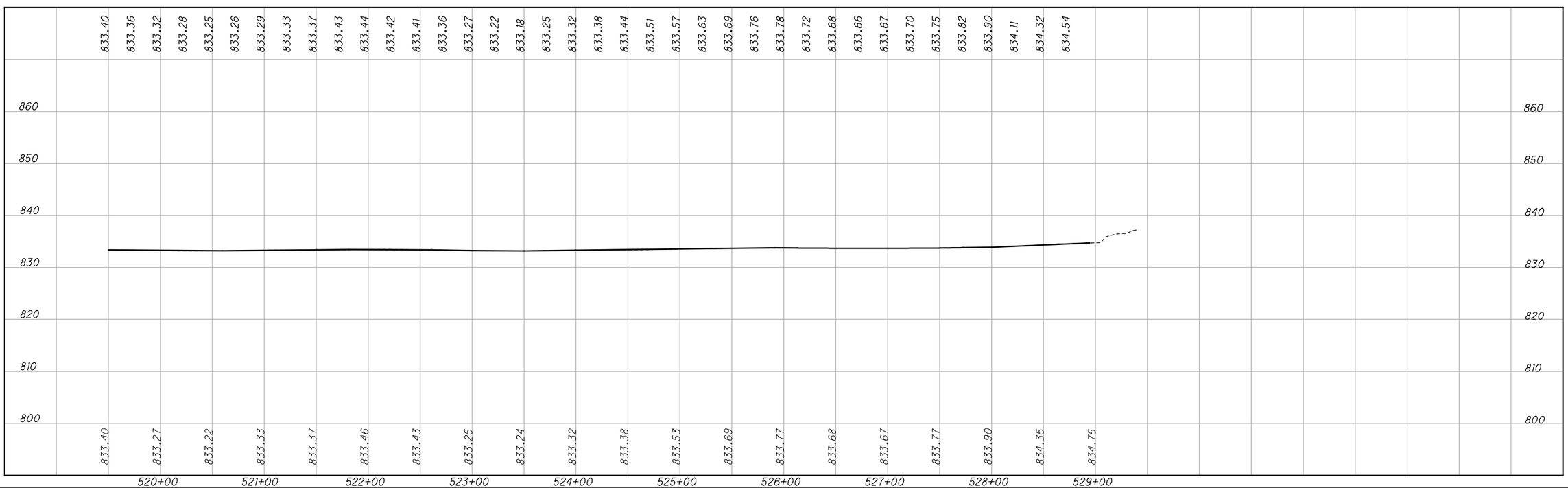

HORIZONTAL SCALE IN FEET
0 25 50 100

DRAWN GL
CHECKED SPR

SOIL PROFILE
STA. 519+50 TO END SR 41

MIA-41-09.49

6 / 6

O:\Projects\J033\J033897.01-West Main Street (SR41) Corridor Improve\Sheets\108662_IP007.dgn Sheet 3/27/2020 4:27:13 PM glogunova